BEKO

installation, operation & food storage instructions

Fridge Freezer

CT5381APW



get the best from your new refrigerator

Please read this manual first!

Dear Customer,

We hope that your product, which has been produced in a 1st-class manufacturing facility and checked under the most meticulous quality control procedures, will provide you with years of good service.

For this, we recommend you to carefully read the entire manual of your product before using it and keep it at hand for future reference.

This manual

- Will help you use your appliance quickly and safely.
- Read the manual before installing and operating your product.
- Follow the instructions, especially those for safety.
- Keep the manual in an easily accessible place as you may need it later.
- Besides, read also the other documents provided with your product.

Please note that this manual may be valid for other models as well.

Symbols and their descriptions

This instruction manual contains the following symbols:

ⓘ Important information or useful usage tips.

⚠ Warning against dangerous conditions for life and property.

⚠ Warning against electric voltage.

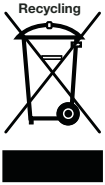

This product is supplied with the selective sorting symbol for waste electrical and electronic equipment (WEEE).
This means that this product must be handled pursuant to European Directive 2002/96/EC in order to be recycled or dismantled to minimise its impact on the environment. For further information, please contact your local or regional authorities.

Electronic products not included in the selective sorting process are potentially dangerous for the environment and human health due to the presence of hazardous substances.

1 Your refrigerator 3

2 Warnings 4

Electrical Requirements 5
Warning! This Appliance Must Be Earthed 5
Energy Saving Tips.....6

3 Installation 7

TRANSPORTATION INSTRUCTIONS.7
INSTALLATION INSTRUCTIONS.....8
Replacing the interior light bulb 9
REVERSING THE DOORS.....10

4 Before operating 13

Final Check 13

5 Using your refrigerator 14

FREEZING FRESH FOOD.....14
DEFROSTING.....15
A) FRIDGE COMPARTMENT 15
B) FREEZER COMPARTMENT.....15

6 Maintenance and cleaning 16

7 Do's and Don'ts 17

1 Your refrigerator

Congratulations on your choice of a BEKO quality Appliance which has been designed to give you service for many years.

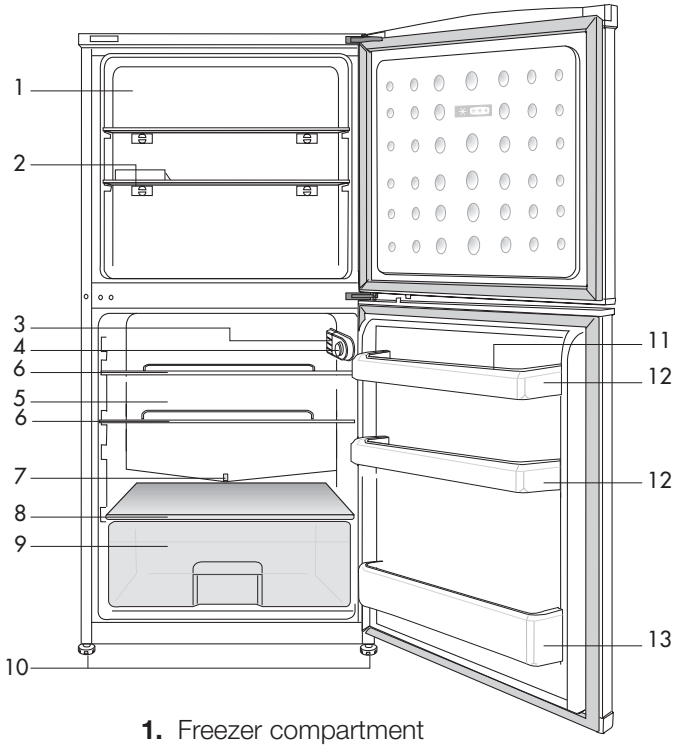

1. Freezer compartment
2. Ice cube tray
3. Interior light
4. Thermostat control
5. Fridge compartment shelves
6. Adjustable shelves
7. Defrost water collection channel-Drain tube
8. Salad crisper cover
9. Salad crisper
10. Adjustable front feet
11. Egg tray
12 .Door shelf
13. Bottle shelf

Figures that take place in this instruction manual are schematic and may not correspond exactly with your product. If the subject parts are not included in the product you have purchased, then it is valid for other models.

2 Warnings

• Do not connect your appliance to the electricity supply until all packing and transit protectors have been removed.

• If transported horizontally leave to stand upright for at least 4 hours before switching on to allow compressor oil to settle

• If you are discarding an old refrigerator with a lock or latch fitted to the door, disable the lock/latch, ensure that it is left in a safe condition to prevent the entrapment of young children.

• This fridge/freezer must only be used for its intended purpose i.e the storing and freezing of edible foodstuff.

• Do not dispose of the appliance on a fire. At **BEKO**, the care and protection of our environment is an ongoing commitment. This appliance which is among the latest range introduced is particularly environment friendly. Your appliance contains non CFC / HFC natural substances in the cooling system (Called R600a) and in the insulation (Called cyclopentane) which are potentially flammable if exposed to fire. Therefore, take care not to damage, the cooling circuit / pipes of the appliance in transportation and in use. In case of damage do not expose the appliance to fire or potential ignition source and immediately ventilate the room where the appliance is situated.

• We suggest you contact your local authority for disposal information and facilities available.

• See Installation Instructions on on page 8 for information on suitable location.

• To obtain the best possible performance and trouble free operation from your appliance it is very important to carefully read these instructions.

• On delivery, check to make sure that the product is not damaged and that all the parts and accessories are in perfect condition.

• Ensure that the plug remains readily accessible. Do not use multiple adapter or extension cable.

• Failure to observe these instructions may invalidate your right to free service during the guarantee period.

• Keep ventilation openings, in the appliance enclosure or in the built-in structure, clear of obstruction.

• Do not use mechanical devices or other means to accelerate the defrosting process, other than those recommended by the manufacturer.

• Do not damage the refrigerant circuit.

• Do not use electrical appliances inside the food storage compartments of the appliance, unless they are of the type recommended by the manufacturer.

• We suggest you keep these instructions in a safe place for easy reference.

• This appliance is not intended for use by persons (including children) with reduced physical, sensory or mental capabilities, or lack of experience and knowledge, unless they have been given supervision or instruction concerning use of the appliance by a person responsible for their safety.

• Children should be supervised to ensure that they do not play with the appliance.

Electrical Requirements

Before you insert the plug into the wall socket make sure that the voltage and the frequency shown on the rating plate inside the appliance corresponds to yourelectricity supply.

Rating label is on the left hand side of fridge inner liner.

We recommend that this appliance be connected to the mains supply via a suitable switched and fused socket. The appliance must be positioned so that the plug is accessible.

Should the mains lead of the appliance become damaged or should it need replacing at any time, it must be replaced by a special purpose made mains lead which can only be obtained from a **BEKO** Authorised Service Agent.

Warning! This Appliance Must Be Earthed

If the fitted moulded plug is not suitable for your socket, then the plug should be cut off and an appropriate plug fitted. Destroy the old plug which is cut off as a plug with bared cord could cause a shock hazard if inserted into a socket elsewhere in the house.

The moulded plug on this appliance incorporates a 13 A fuse. Should the fuse need to be replaced an ASTABEAB approved BS 1362 fuse of the same rating must be used. Do not forget to refit the fuse cover. In the event of losing the fuse cover the plug must not be used until a replacement fuse cover has been fitted.

Colour of the replacement fuse cover must be the same colour as that visible on the pin face of the plug. Fuse covers are available from any good electrical store.

Important! Fitting A Different Plug

As the colours of the wires in the mains lead of this appliance may not correspond with the coloured markings identifying the terminals in your plug proceed as follows: (See diagram).

1. Connect the green-yellow or green (Earth) wire to the terminal in the plug marked 'E' or with the symbol ⏚ or coloured green and yellow or green.

2. Connect the blue (Neutral) wire to the terminal in the plug marked 'N' or coloured black.

3. Connect the brown (Live) wire to the terminal in the plug marked 'L' or coloured red.

With alternative plugs a 13 A fuse must be fitted either in the plug or adaptor or in the main fuse box. If in doubt contact a qualified electrician.

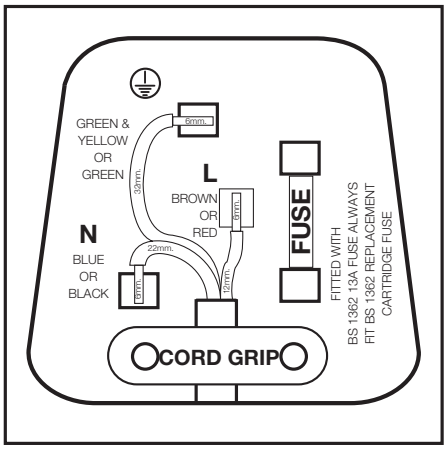

Energy Saving Tips

1- Ensure your appliance is installed in a well ventilated area.

2- Ensure the time between buying chilled/frozen food and placing them in your appliance is kept at minimum, particularly in summer. We recommend you use a cool bag or a special carrier bag to carry perishable food.

3- Do not leave the door (s) of your appliance open longer than necessary and ensure they are closed properly after each opening.

4- Defrost frozen food in the fridge compartment, so that frozen food acts as an ice pack to assist cooling in the fridge.

3 Installation

TRANSPORTATION INSTRUCTIONS

1. The appliance should be transported only in a vertical upright position. The packing as supplied must be intact during transportation.

2. If during the course of transport the appliance has to be transported horizontally, it must only be laid on its right hand side when standing in the front of the appliance. After bringing it to upright position,it must not be operated for at least 4 hours to allow the system to settle.

3. Failure to comply with the above instructions could result in damage occuring to the appliance. The manufacturer will not be held responsible if these instructions are disregarded.

4. The appliance must be protected against rain, moisture and other atmospheric influences.

5. When positioning your appliance take care not to damage your flooring, pipes, wall coverings etc. Do not move the appliance by pulling by the door or handle.

6. Empty any water in the drain tray before moving. See section 'Defrosting' and 'Care & cleaning' for further information.

IMPORTANT : Care must be taken while cleaning / carrying the appliance to avoid touching the bottom of the condenser metal wires at the back of the appliance as you might injure your fingers and hands.

Do not attempt to sit or stand on top of your appliance as it is not designed for such use. You could injure yourself or damage the appliance.

"**IMPORTANT:** Make sure that mains cable is not caught under the appliance during and after carrying / moving the appliance, to avoid the mains cable becoming cut or damaged."Do not allow children to play with the appliance or tamper with the controls.

"IMPORTANT: This appliance is not designed for stacking with any otherappliance.When positioning your appliance, take care not to damage your flooring, pipes,wall coverings etc.

BEKO declines to accept any liability should the instructions not be followed.

INSTALLATION INSTRUCTIONS

1.The space in the room where the appliance is installed must not be smaller than 10 cubic metres.

2.Do not put your fridge freezer in a cold room where the temperature is likely to go below +5 degrees C (41 degrees F) during night time and/or especially in winter.

3.This fridge freezer has been designed to operate in ambient temperatures between +5 and +32 degrees C (41 and 90 degrees F) Therefore if the appliance is installed in an unheated/ cold room (eg: conservatory/annex/ shed/garage etc) then the appliance will not operate causing the freezer compartment to run warmer and as a result the storage time of frozen food may be reduced.

4.Do not place the appliance near cookers, radiators or in direct sunlight as this will cause your appliance to work harder. If installed next to a source of heat or freezer, maintain the following minimum side clearances:

From Cookers	50 mm (2”)
From Radiators	300 mm (12”)
From Freezers	25 mm (1”)

5.Make sure that sufficient room is provided around the appliance to ensure free air circulation.Fit the two plastic wall spacers supplied with the appliance onto the condenser at the back of the appliance by rotating 1/4 turn (See Diagram).

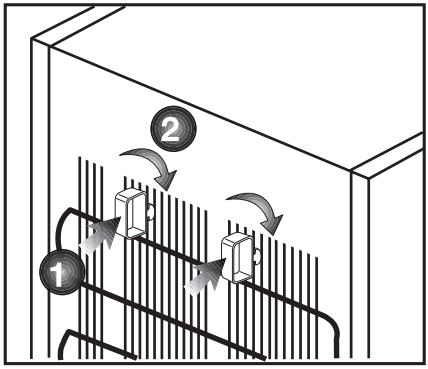

6.The fridge/freezer should be located on a smooth surface. The two front feet can be adjusted as required. To ensure that your appliance is standing upright adjust the two front feet by turning clockwise or anti-clockwise, until the product is in firm contact with the floor. Correct adjustment of feet avoids excessive vibration and noise.

7.Refer to cleaning and care section to prepare your appliance for use.

8.A special receptacle is supplied to store the mains plug during transit. The receptacle is fixed at the back of the cabinet, on the left hand side of the compressor. (See diagram) Gently remove the plug from the receptacle. Never pull the mains cord, you may damage the appliance. In the case of transportation,ensure you locate the plug in the receptacle provided to avoid transit damage.

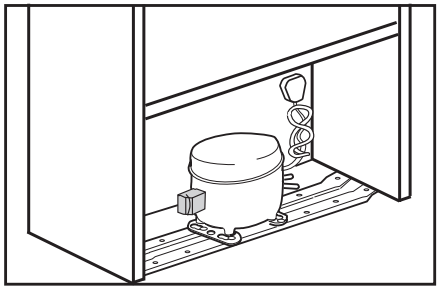

Replacing the interior light bulb

Should the light fail to work switch off at the socket outlet and pull out the mains plug. Follow the below instructions to check if the light bulb has worked itself loose.

If the light still fails to work obtain a replacement E14 screw cap type 15 Watt (Max) bulb from your local electrical store and then fit it as follows:

1. Switch off at the socket outlet and pull out the mains plug. You may find it useful to remove shelves for easy access.

2. Remove the light diffuser cover as shown in figure (a-b).

3. Replace the burnt-out light bulb.

4. Reassemble the light diffuser cover as shown in figure (c).

"Push firmly to ensure cover is fitted properly."

5. Carefully dispose of the burnt-out light bulb immediately.

"Replacement light bulb can easily be obtained from a good local electrical or DIY store."

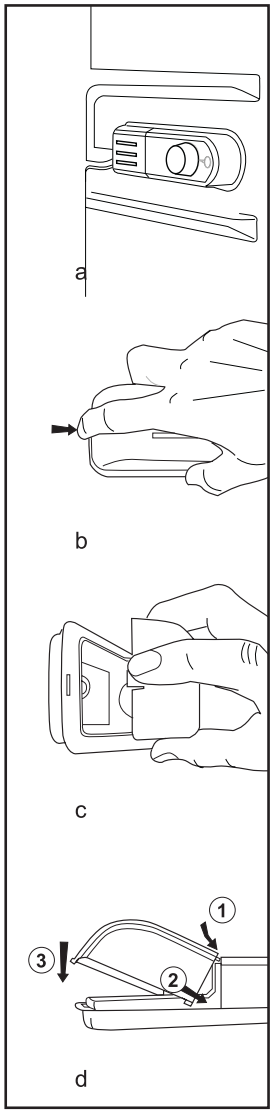

REVERSING THE DOORS

We recommend that you reverse doors before switching on for the first time.

Tools required: Small and medium size flat and cross-headed screwdrivers, a pair of pliers.

Spare Parts supplied in the plastic bag: The following parts, which are exclusively for left hand side fitted hinge operation are supplied in a plastic bag with the appliance:

- Upper door top trim hinge covers – there are 2 different parts, one for each side of top trim.
- Upper door middle hinge bushing/ door stopper assembly.

We suggest you keep all the parts supplied in the plastic bag and also parts, which have been removed when reversing doors, in a safe place for possible future, re-use.

IMPORTANT: We suggest you ask somebody to help you when moving the appliance around and to hold doors when removing / re-fitting hinges and doors to avoid any injury and damage to the product.

Please refer to diagrams supplied. To follow numbers in brackets below, refer to the main diagram.

1.Switch off the appliance at the socket outlet and pull out the mains plug.

2.Remove all loose items and fittings and food, if any, from inside the appliance and door racks.

3.Gently prise off plastic hinge cover of upper door top trim using a small flat-headed screwdriver. (1)

4.Gently tilt the appliance back against a strong wall on its rear side sufficiently to allow the lower hinge to be removed. Take care to protect the appliance, your wall and floor coverings. You can utilise the original packaging to do this. Once you tilt the appliance back, check to make sure the appliance is completely stable and safe before you carry on. (2)

5.Unscrew and remove the lower hinge using a cross-headed screwdriver while holding the lower door firmly.(3)

6.Remove lower door carefully off the middle hinge and stand door upright in a safe place.(4)

7.Open upper door and unscrew and remove the middle hinge while holding the upper door firmly. Use a flat-headed screwdriver. Middle hinge will need to be rotated 180 degrees before re-fitting on the opposite side.(5)

8.Remove upper door carefully off the upper hinge and stand door upright in a safe place.(6)

9.Unscrew and remove the upper hinge using a flat-headed screwdriver. (7)

10.Rotate the upper hinge 180 degrees and then unscrew and remove the hinge pin using a pair of pliers and re-fit to opposite side of hinge.(8)

11.Reposition plugs and hinge pin bushings on top of doors on the opposite side of both doors. Use small flat-headed screwdrivers to remove plugs and bushings. Take care not to mark doors.(9)

12.Reposition left hand side feet on the opposite side.(10)

13.Unscrew and remove the upper door middle hinge pin bushing/ door stopper using a cross-headed screwdriver. Important: This part cannot be used on the opposite side; left hand side middle hinge pin bushing/door stopper part is supplied in the plastic bag.(11)

14.Re-fit the upper hinge on the left hand side using flat-headed screwdriver.(12)

15.Fit upper door left hand side middle hinge pin bushing/door stopper supplied in the plastic bag using cross-headed screwdriver.(13)

16.Reposition three small plastic plugs on the left hand side, which are covering middle hinge holes, on the opposite side to cover holes left empty. (14)

17.Locate and re-fit upper door to upper hinge and hold the door firmly. (15)

18.Locate the middle hinge pin to middle hinge pin bushing of upper door on the left hand side and re-fit the middle hinge.(16)

19.Reposition the two screws fitted to lower hinge holes on the left hand side at the bottom of the cabinet on the opposite side.(17)

20.Unscrew and reposition the hinge housing and steel pant on the right hand side at the bottom of the door on the opposite side. (18)

21.Locate and re-fit lower door to middle hinge pin and then re-fit the lower hinge on the left hand side.(19), (20)

22.Carefully stand the appliance upright and adjust the two front feet if necessary.

23.Check that doors open and close easily, they are aligned correctly and that there are no gaps allowing air into the cabinet. If there are gaps between the door seal and the cabinet, adjust the door seal by gently pulling away from the door using fingers.

24.Check that all the hinge screws are tightened. Avoid over tightening the screws.

25.Put all items, fittings back in the appliance.

26.Fit upper door top trim plastic hinge cover. Upper door top trim hinge cover is supplied in the plastic bag.(21)

27.Wait for at least 4 hours to allow the system to settle before switching on.

28.Once the correct storage temperatures have been reached in the appliance, put back all the food.

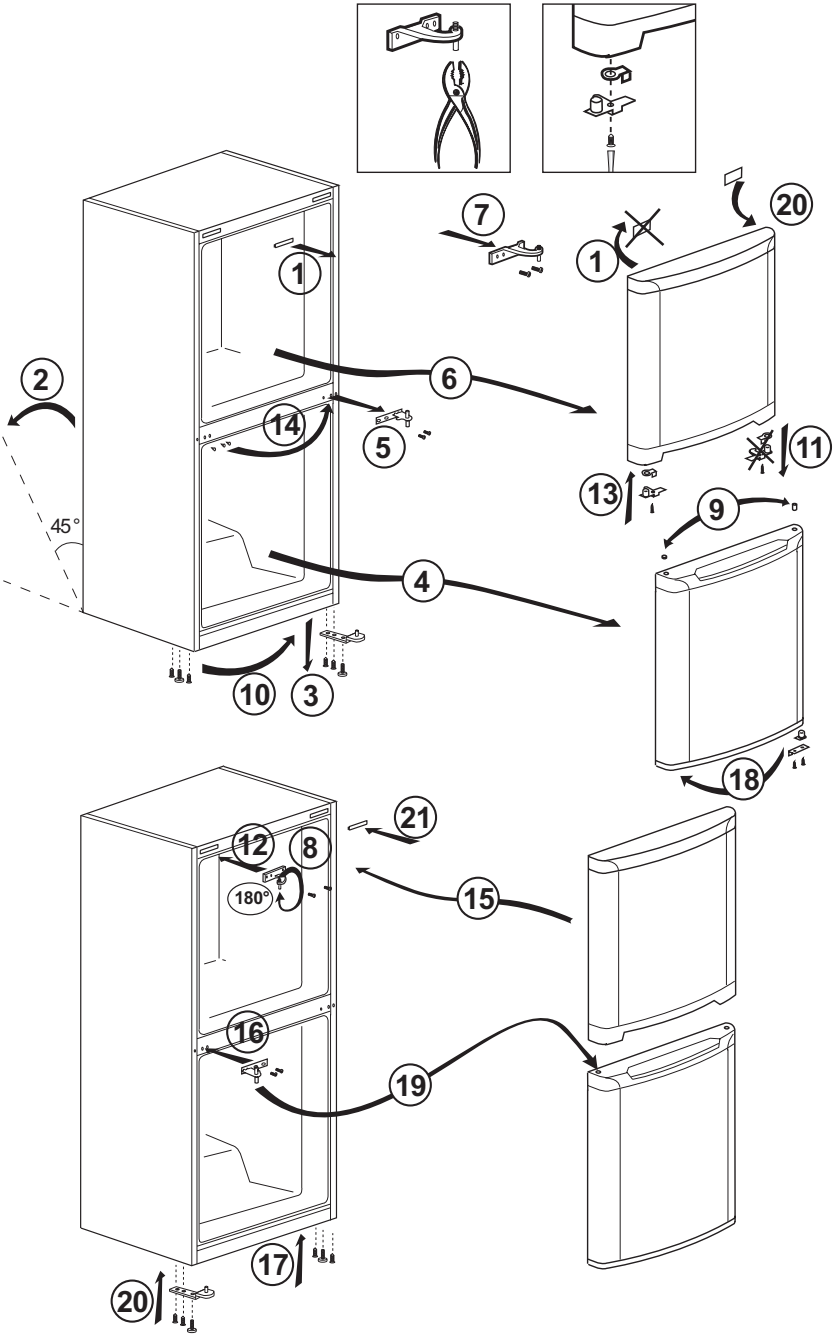
1
2
45°
3
4
5
6
7
8
9
10
11
12
13
14
15
16
17
18
19
20
21
180°

4 Before operating

Final Check

Before you start using the fridge/ freezer check that:

1. The feet have been adjusted for perfect levelling.
2. The interior is dry and air can circulate freely at the rear of the cabinet.
3. Clean the interior as recommended under “CLEANING AND CARE.”
4. Insert the plug into the wall socket and switch on the electricity supply.
• When the door is open the fridge interior light will come on.
5. You will hear a noise as the compressor starts up. The liquid and gases sealed within the refrigeration system may also give rise to noise, whether the compressor is running or not which is quite normal.
6. Set the setting half way between min and max.
7. Front edges of the cabinet may feel warm. This is normal. These areas are designed to be warm to avoid condensation.
8. “Do not load the appliance immediately it is switched on. Wait until the correct storage temperature has been reached. We recommend that you check the temperature with an accurate thermometer (see; Temperature Control and Adjustment)”

5 Using your refrigerator

TEMPERATURE CONTROL AND ADJUSTMENT

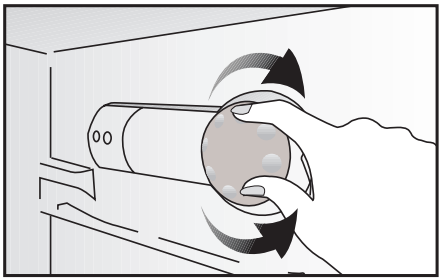

Operating temperatures are controlled by the thermostat (Fig. 1) and may be set at any position between 1 and 5, 5 being the coldest position. Towards 5 you will obtain a colder fridge temperature and vice versa.

To switch off the appliance completely: Turn the thermostat to “0” (Zero) position.

“Closed” setting will keep humidity inside the salad crisper.

“Open” setting will increase air circulation thereby reduce humidity in the salad crisper.

If you wish to store food in the salad crisper for longer , you should keep the humidity adjustment in the closed position.

The average temperature inside the fridge depends on the following factors:

- Ambient temperature in the room (seasonal changes)
- Frequency of door opening
- Placing hot food inside the product
- Position of the product inside the room (being exposed to sun light)

We recommend that you check the temperature with an accurate thermometer to ensure that the storage compartments are kept to the desired temperature.

Remember you must take your reading very quickly since the thermometer temperature will rise very rapidly after you remove it from the freezer.

Please remember each time the door is opened cold air escapes and the internal temperature rises. Therefore never leave the door open and ensure it is closed immediately after food is put in or removed.

STORING FRESH FOOD

Your freezer is suitable for the long-term storage of commercially frozen foods and also can be used to freeze and store fresh food.

If there is a power failure do not open the door. Frozen food should not be affected if the failure lasts for less than 23 hrs. If the failure is longer, then the food should be checked and either eaten immediately or cooked and then refrozen.

FREEZING FRESH FOOD

Please observe the following instructions to obtain the best results.

Do not freeze too large a quantity at any one time. The quality of the food is best preserved when it is frozen right through to the core as quickly as possible.

Do not exceed the freezing capacity of your appliance in 24 h which is 3.5 kg (11lb)

Placing warm food into the freezer compartment causes the refrigeration compressor to operate continuously until the food is frozen solid. This can temporarily lead to excessive cooling of the refrigeration compartment.

When freezing fresh food turn the thermostat towards 5. Small quantities of food up to 1/2 kg. (1 lb) can be frozen without having to rotate the temperature control knob.

You may place fresh food to be frozen in any part of the freezer.

Take special care not to mix already frozen food and fresh food.

DEFROSTING

A) FRIDGE COMPARTMENT

The fridge compartment defrosts automatically. The defrosting water runs to the drain tube via a collection container at the back of the appliance (1).(see diagram)

During defrosting water droplets may form at the back of the fridge compartment where concealed evaporator is located.

Some droplets may remain on the liner and refreeze when defrosting is completed. Do not use pointed or sharp edged objects such as knives, forks to remove the droplets which have frozen.

If at any time the defrost water does not drain from the collection channel, check to ensure that no food particles have blocked the drain tube. The drain tube can be cleared by pushing the special plastic plunger provided down the drain tube (2). If the frost layer reaches about 1/4"(7 mm), reduce the setting (i.e. from 4 to 3) to restart automatic defrosting.

B) FREEZER COMPARTMENT

Defrosting is very easy and without mess thanks to a special defrost collection what is a basin.

Defrost twice a year or when a frost layer of around 7 mm (1/4") has formed.

To start defrosting procedure switch off the appliance at the socket outlet and pull out the mains plug.

All food should be wrapped in several layers of newspaper and stored in a cool place (e.g. fridge or larder).

Containers full of warm water may be placed carefully in the freezer to speed up the defrosting.

Do not use pointed or sharp edged objects such as knives, forks to remove the frost.

Never use hairdryers, electrical heaters and other similar electrical appliances for defrosting.

When defrosting has finished, sponge out any defrost water which collects at the bottom of the freezer and dry the interior thoroughly. Insert the plug in to the wall socket and switch on the electricity supply.

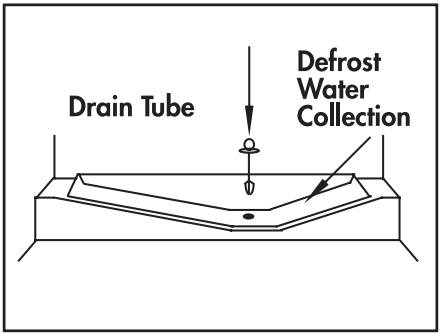

6 Maintenance and cleaning

** We recommend that you switch off the appliance at the socket outlet and pull out the mains plug before cleaning.

** Never use any sharp abrasive instrument, soap, household cleaner, detergent and wax polish for cleaning.

** Use luke warm water to clean the cabinet of the appliance and wipe it dry.

** Use a damp cloth wrung out in a solution of one teaspoon of bicarbonate of soda to one pint of water to clean the interior and wipe it dry.

** Make sure that no water enters the lamp housing.

** If the appliance is not going to be used for a long period of time switch it off, remove all food, clean it and leave the door ajar.

** Any dust that gathers on the condenser, which is located at the back of the appliance, should be removed once a year with a vacuum cleaner.

** Check door seals regularly to ensure they are clean and free from food particles.

** Removal of door tray

• To remove door racks, remove all the contents and then simply push the door rack upwards from the base.

** To remove a freezer drawer, pull it as far as possible, and then tilt it upwards, and then pull it out completely.

** To remove the freezer flap door, first open the door 3” and then gently pull it off. Make sure that the flap is in place before closing the freezer door.

** Make sure that the special plastic container (drain tray) at the back of the appliance which collects defrost water is clean at all times. If you want to remove the tray to clean it follow the instructions below :

• Switch off at the socket outlet and pull out the mains plug.

• Push the lug down with the tip of a screw driver & pull out with a jerk movement

• Clean the drain tray and wipe it dry.

• Reassemble reversing the sequence and operations.

** Avoid spillage of food particularly small items like rice, peas, beans through the fan guard as they may cause the cooling system to block and therefore operate less efficiently.

7 Do's and Don'ts

Do- Clean your appliance regularly (See “Cleaning and Care”)
Do- Keep raw meat and poultry below cooked food and dairy products.
Do- Take off any unusable leaves on vegetables and wipe off any soil.
Do- Leave lettuce, cabbage, parsley and cauliflower on the stem.
Do- Wrap cheese firstly in greaseproof paper and then in a polythene bag excluding as much air as possible. For best results take out of the fridge compartment an hour before eating.
Do- Wrap raw meat and poultry loosely in polythene or aluminium foil. This prevents drying.
Do- Wrap fish and offal in polythene bags.
Do- Wrap food which have a strong odour or can dry out in polythene bags, aluminium foil or place in an airtight container.
Do- Wrap bread well to keep it fresh.
Do- Chill white wines, beer, lager and mineral water before serving.
Do- Check contents of the freezer every so often.
Do- Keep food for as short a time as possible and adhere to “Best Before”, “Use by” etc. dates.
Do- Store commercially frozen food in accordance with the instructions given on the packets that you buy.
Do- Always choose high quality fresh food and be sure it is thoroughly clean before you freeze it.
Do- Prepare fresh food for freezing in small portions to ensure rapid freezing.
Do- Wrap all food in aluminium foil or freezer quality polythene bags and make sure any air is excluded.
Do- Wrap frozen food when you buy it and put it in to the freezer as soon as possible.
Do- Defrost food in the fridge compartment.
Do- Remove ice cream from the freezer 10-20 minutes before serving.
Don’t- Store bananas in your fridge compartment.
Don’t- Store melon in your fridge. It can be chilled for short periods as long as it is wrapped to avoid it flavouring other food.
Don’t- Store poisonous or any dangerous substances in your appliance. It has been designed for the storage of edible foodstuffs only.
Don’t- Consume food which has been stored for an excessive time in the fridge.
Don’t- Store cooked and fresh food together in the same container. They should be packaged and stored seperately.
Don’t- Let defrosting food or food juices drip onto food.
Don’t- Leave the door open for long periods as this will make the appliance more costly to run and cause excessive ice formation.
Don’t- Put hot food into the appliance. Let it cool down first.
Don’t- Put liquid-filled bottles or sealed cans containing carbonated liquids into the freezer as they may burst.

Don't- Exceed the maximum freezing loads (3,5 kg in any 24 hours) when freezing fresh food.

Don't- Give children ice-cream and water ices direct from the freezer. The low temperature may cause 'freezer burns' on lips.

Don't- Freeze fizzy drinks.

Don't- Try to keep frozen food which has thawed, it should be eaten within 24 hours or cooked and refrozen.

Don't- Remove items from the freezer with wet hands.

Don't- Close the freezer door before placing the compartment cover in its place.

Don't- Leave frozen food at room temperature to thaw; the best way to defrost food is to put it in the fridge to thaw slowly. Make sure you avoid defrosting food or food juices drip onto other food.

PROBLEM SOLVING

If the appliance does not operate when switched on, check whether:

• The plug is inserted properly in the socket and that the power supply is on. (To check the power supply to the socket, plug in another appliance)

• The fuse has blown/circuit breaker has tripped/main distribution switch has been turned off.

• The temperature control has been set correctly and not to "0" (OFF)

• New plug is wired correctly if you have changed the fitted moulded plug.

If the appliance is still not operating after the above checks, please refer to the section on "How To Obtain Service".

Please ensure that above checks have been made as a charge will be made if no fault is found.

GUARANTEE DETAILS

Your new Beko product is guaranteed against the cost of breakdown repair for twelve months from the date of the original purchase.

What is covered?

- Repairs necessary as a result of faulty materials, defective components or manufacturing defect.
- The cost of functional replacement parts, but excluding consumable items.
- The labour costs of a Beko approved repairer to carry out the repair.

What is not covered?

- Transit, delivery or accidental damage or misuse and abuse.
- Cabinet or appearance parts, including control knobs, flaps, handles or container lids.
- Accessories or consumable items including but not limited to, ice trays, scrapers, cutlery baskets, filters and light bulbs.
- Repairs required as a result of unauthorised repair or inexpert installation that fails to meet the requirements contained in the user instruction book.
- Repairs to products used on commercial or non-residential household premises.
- Loss of frozen food in freezers or fridge/freezers. (Food loss insurance is often included within your household contents insurance policy, or may be available separately from your retailer).

Important notes.

- Your Beko product is designed and built for domestic household use only.
- The guarantee will be void if the product is installed or used in commercial or non-residential domestic household premises.
- The product must be correctly installed, located and operated in accordance with the instructions contained in the User Instructions Booklet provided.
- Professional installation by a qualified Electrical Domestic Appliance Installer is recommended for all Washing Machines, Dishwashers and Electric Cookers
- Gas Cookers must only be installed by a Gas Safe (or BORD GAIS) registered Gas Installer.
- The guarantee is given only within the boundaries of the United Kingdom and the Republic of Ireland.
- The guarantee is applicable only to new products and is not transferable if the product is resold.
- Beko disclaims any liability for incidental or consequential damages. The guarantee does not in anyway diminish your statutory or legal rights.

HOW TO OBTAIN SERVICE

Please keep your purchase receipt or other proof of purchase in a safe place; you will need to have it should the product require attention under guarantee.

You should also complete the details below; it will help us assist you when requesting service. (The model number is printed on the Instruction Booklet and the serial number is printed on the Rating Label affixed to the appliance)

Model No: **Serial No:** **Retailer:** **Date of purchase:**

For service under guarantee simply telephone the appropriate number below

UK Mainland & Northern Ireland

Fridges & Freezers	0845 6004903
Electric Cookers	0845 6004902
Gas & Dual Fuel Cookers	0845 6004905
Washing Machines & Dishwashers	0845 6004906

Republic of Ireland

All Refrigeration, All Cookers Washing Machines & Dishwashers	01 862 3411

Before requesting service please check the trouble-shooting guide in the Operating Instructions as a charge may be levied where no fault is found even though your product may still be under guarantee.

Service once the manufacturers guarantee has expired.

If you have purchased an extended guarantee please refer to the instructions contained within the extended guarantee agreement document. Otherwise please call the appropriate number above where service can be obtained at a charge.

Should you experience any difficulty in obtaining service please contact the Beko Customer Help-Line. Tel: 0845 6004911 e-mail: service@beko.co.uk

BEKO



BEKO plc
Beko House
Caxton Way
Watford
Hertfordshire
WD18 8UF
Tel: 0845 6004911
Fax: 0845 6004922
e-mail: service@beko.co.uk
website: www.beko.co.uk

Printed in Turkey

Part no: **57 1218 0000**
Revision no: **AB**