Stoves Retro Fridge Freezer

User Manual

Services, spares and technical
0344 815 3740
www.stoves.co.uk

Contents

04 Welcome

05 Safety instructions

10 Your Fridge Freezer

14 Technical specification

15 Installation

18 Usage

19 Food storage tips

22 Cleaning and care

25 Troubleshooting

27 Guarantee

28 Index

Welcome

Welcome

Thank you for choosing this **Stoves** Fridge Freezer, which has been designed and manufactured to give you many years of trouble-free service. You may already be familiar with using a similar product but please take time to read these instructions, which have been written to ensure you get the very best from your purchase.

Warranty

Stoves provides you with a guarantee which will protect you should your Fridge Freezer develop an electrical or mechanical fault during the guarantee period. To ensure that you get a prompt and efficient service, please register your Fridge Freezer immediately.

To register, complete the form online, visit us at
www.stoves.co.uk/warranty/

Items included

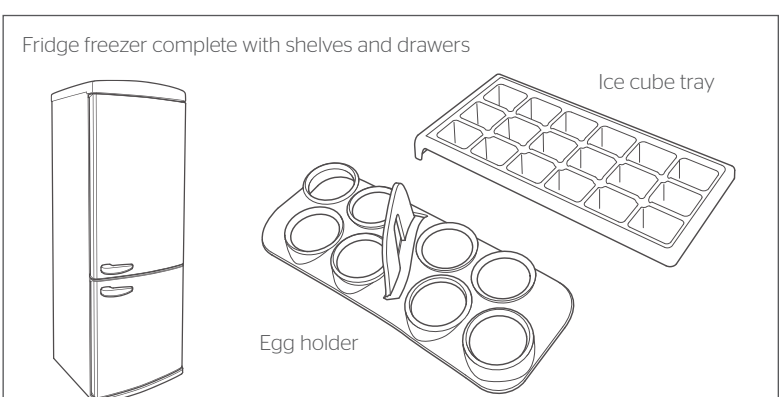

Figure 1

Safety instructions

To ensure your safety and the safety of others, please read the following safety precautions before you use your Fridge Freezer.

- Your Fridge Freezer conforms to current safety requirements. Inappropriate use can, however, lead to personal injury and damage to property. To avoid the risk of accidents and damage to your Fridge Freezer, read this user guide carefully before using it for the first time. It contains important information on the installation, safety, use and maintenance of your Fridge Freezer. Retain this user guide for future use and pass it on to any new owners. Read this user guide before using or installing your Fridge Freezer.
- Do not expose your Fridge Freezer to moisture or rain.
- Always remove the mains plug from the wall socket when not in use or before any service operation.
- Your Fridge Freezer is for domestic use only and is only intended for the storage of edible foodstuffs.
- This appliance can be used by children aged from 8 years and above and persons with reduced physical, sensory or mental capabilities or lack of experience and knowledge if they have been given supervision or instruction concerning use of the appliance in a safe way and understand the hazards involved. Children shall not play with the appliance. Cleaning and user maintenance shall not be made by children without supervision.
- Before setting up your Fridge Freezer, check for any external visible damage. Do not install or use your Fridge Freezer if it is damaged.
- Before connecting your Fridge Freezer, ensure that the information on the data plate (voltage and connected load) matches that of the mains electricity supply. If in doubt, consult a qualified electrician.

Safety instructions

- Containers with flammable gases or liquids can leak at low temperatures. Do not store any containers with flammable materials, such as spray cans or fire extinguisher refill cartridges in the vicinity of the Fridge Freezer.
- Do not connect your Fridge Freezer to the mains electricity supply using an extension lead.
- A damaged power cord/plug can cause fire or give you an electric shock. When damaged it must be replaced, this should only be done by qualified personnel.
- Never remove the plug from the socket by pulling the cord. Always hold the plug.
- Never touch the power cord/plug with wet hands as this could cause a short circuit or electric shock.
- Never let the power cord be crushed by the Fridge Freezer itself or other heavy objects.
- Never bend the power cord excessively.
- Never let the power cord touch or pass over heating appliances.
- Do not remove items from the freezer if your hands are damp/wet. This could cause skin abrasions or frost/freezer burns.
- Do not place fizzy drinks, bottles and cans in the freezer compartment as they can burst as the contents freeze.
- Faulty components must only be replaced by an approved Stoves engineer or authorised agent using genuine spare parts.
- Unauthorised repairs could result in unforeseen dangers for the user. Repairs should only be undertaken by an approved Stoves engineer or authorised agent.

- Do not use other electrical appliances inside the Fridge Freezer.
- Do not refreeze food once it has thawed out.
- Do not make any alterations to your Fridge Freezer, unless authorised to do so by Stoves.
- The packaging of the machine could be hazardous to children. Please refer to the disposal instructions on the rear cover.
- Please ensure that you have removed all of the packaging materials and protective tape from your Fridge Freezer before using.
- Please take care when moving your Fridge Freezer. It is heavy and we recommend that a minimum of two people move it. Your Fridge Freezer has a wheel in each back corner. You will find it easiest to move your Fridge Freezer when it is tilted backwards and pushed into position.
- The small quantity of refrigerant used in the Fridge Freezer is eco-friendly R600a (an isobutene) and is flammable/explosive if ignited in enclosed conditions.
- Because of the very low temperatures in the Freezer compartment, some foods, such as ice lollies could cause frost burns if consumed immediately.
- Keep the ventilation openings of the Fridge Freezer clear from obstruction.
- Do not store medicine or academic research samples that require strict temperature control in the Fridge Freezer.
- When cleaning, do not use sharp implements as they may damage the Fridge Freezer.
- Store pre-packed frozen foods in accordance with their instructions and use by date.

Safety instructions

Ecological hints and tips:

We have provided a few important hints and tips, so that you can save on the cost of energy and help protect the environment.

- Do not install the Fridge Freezer close to sources of heat such as a radiator.
- Install the Fridge Freezer in a well ventilated room and keep the openings clear from obstruction.
- Do not install the Fridge Freezer on a wet floor or in a location with high humidity/moisture content.
- Food which is to be frozen (when cool) should be placed in the fridge compartment before being transferred to the freezer.
- Pack all foods into airtight packages before placing them into the freezer compartment.
- Ensure there are no obstructions preventing the doors from closing properly.
- Try to avoid keeping the doors open for long periods or opening them too frequently as warm air will enter the cabinet and cause the compressor to switch on unnecessarily often.

Environmental information:

- Once installation is complete, please dispose of the packaging with due regard to safety and the environment. Disposal instructions can be found on the rear cover.
- Your Fridge Freezer does not contain gases which damage the ozone layer, in either its refrigerant circuit or insulation materials.

No frost technology

Your Fridge Freezer differs from many other standard Fridge Freezers. Other Fridge Freezers may experience freezing in the freezer compartment due to door openings and the humidity in the food. In such Fridge Freezers defrosting is required; the fridge has to be periodically turned off, the frozen food moved to a suitable container and the ice gathered in the freezer compartment removed. Your 'No Frost' Fridge Freezer prevents such problems by evenly blowing dry cold air into the fridge and freezer compartments through a blower fan. This cools your food evenly and uniformly, preventing humidity and freezing.



Your fridge freezer

Front view



Figure 2

The following information will help you to identify the different parts of your Fridge Freezer and provide suggestions on the best way to use them.

Refrigerator compartments

1. Vegetable cases; for storing loose vegetables
2. Thermostat; to regulate temperature control
3. Adjustable glass shelf; for storing commonly accessed foods
4. Wine rack
5. Lamp
6. Top door shelf; for storing butter and cheese
7. Middle door shelf; for storing smaller items of food
8. Bottom door shelf; for storing smaller items of food
9. Egg holder

Freezer Compartment

10. Ice cube tray
11. Top basket; place food to be frozen here
12. Middle basket; place food that has been in the top basket for more than 24 hours here
13. Bottom basket; place food that has been in the top basket for more than 24 hours here

Your fridge freezer

Rear view

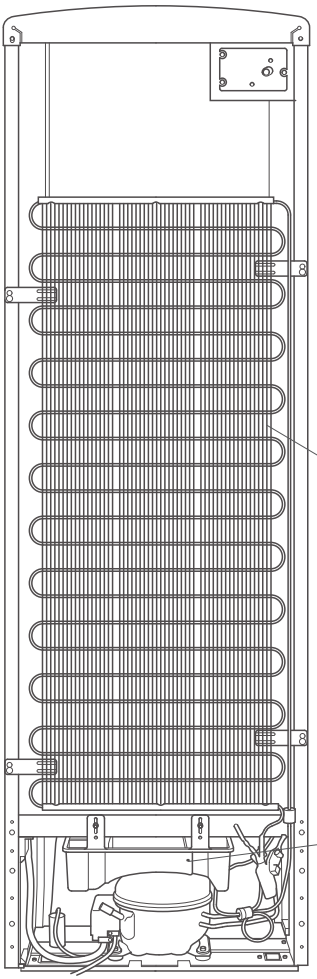

Figure 3

1. Condenser
2. Vaporisation container; Part of the 'No Frost' technology which allows water collected during automatic defrosting to naturally evaporate

Electrical information

- Your Fridge Freezer requires a 220-240V, 50Hz mains supply. Do not use any other supply.
- Your Fridge Freezer may be fitted with a moulded, earthed plug, which cannot be rewired.
- If the fuse cover becomes damaged, you must not use the plug.
- If your plug requires changing because it is not suitable for your socket, or it is damaged, you should consult a qualified electrician.

Fuse:

- Replacement fuses should be ASTA-approved to BS1362 and have the correct 13 Amp rating.
- Replacement fuses can be purchased from an electrical supplier.

Technical specification

Technical specification

Model	Stoves STR60197 Fridge Freezer
Power Source	220-240 V AC, 50Hz
Power Consumption (W)	0.836 KWh/24h
Freezer Rating	4
Climate Class	T/N (16°C - 43°C)
Refrigerant Gas	R600a
Gas Capacity	48 gr
Freezer Capacity	87 Lt
Fresh Food Freezing Capacity	4,2 Kg/24h
Fridge Light	E14 220-240V/ LED 2W
Energy Efficiency Rating	A+ Class
Minimum Room Temperature	16°C

Installation requirements

Before unpacking and manoeuvring your Fridge Freezer, please take the time to read and become familiar with the following points:

- To avoid risk of injury, please take care when moving your Fridge Freezer. It is heavy and we recommend that a minimum of two people move it. Your Fridge Freezer has a wheel in each back corner. You will find it easiest to move your Fridge Freezer when it is tilted backwards and pushed into position.
- Make sure that your Fridge Freezer can fit through all doorways on route to its final location. The dimensions of your Fridge Freezer (including the handles) are 1900mm high x 610mm wide x 695mm deep.

Your Fridge Freezer should be positioned in a location that meets the following requirements:

- In a dry room that can be ventilated and out of direct sunlight.
- Away from any heat source such as a radiator. If this is unavoidable, a suitable heat insulator should be used (this is not supplied).
- On a suitable floor that will not become damaged, or sag under the weight of the Fridge Freezer.
- At least 500mm away from stoves, ovens and heater cores and 50mm away from electrical ovens.
- At least 20mm away from another freezer or kitchen cabinets.
- Insert the distance adjustment plastic blocks into the condenser and turn them 90° to lock them in position. This will prevent the condenser from touching the wall.
- Do not place anything on top of your Fridge Freezer.

Installation

Adjusting the feet

For safe operation, it is important that your Fridge Freezer is stable and balanced. The two adjustable feet at the front are used to level your Fridge Freezer. Make sure that your Fridge Freezer is level before placing any foodstuffs inside it:

1. To increase the height of the Fridge Freezer, turn the feet clockwise (Figure 4).
2. To decrease the height of the Fridge Freezer, turn the feet anti-clockwise (Figure 4).

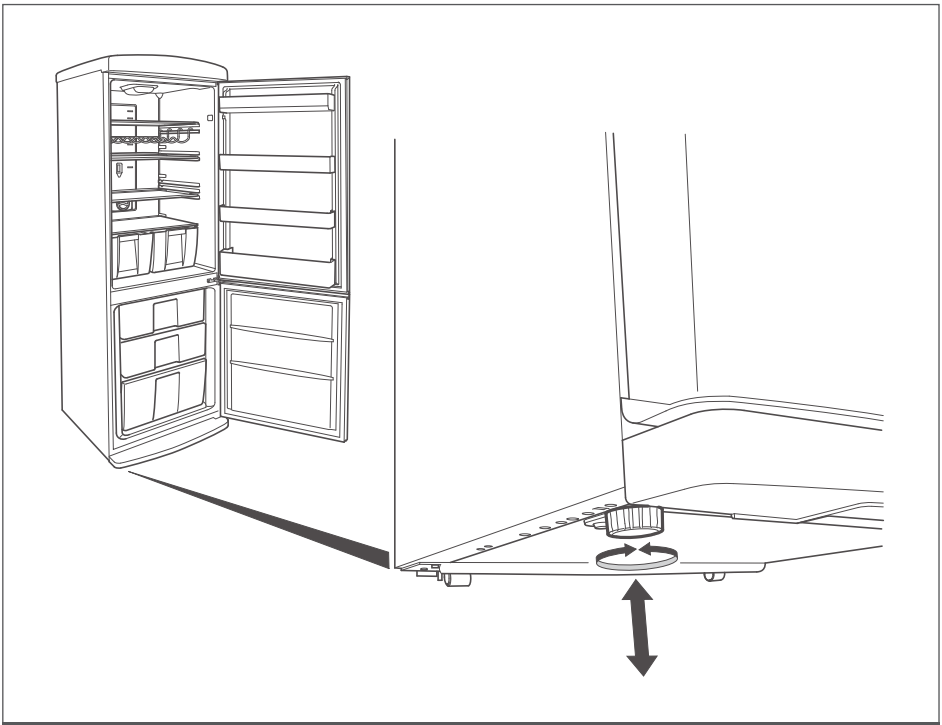

Figure 4

Temperature control

The thermostat (Figure 5) is used to regulate the temperature in the fridge and freezer compartments. It can be set to any value from 1-6, where 6 is the setting with the lowest temperature. For normal everyday use, we recommend a value of 3-5.

1. To decrease the temperature, turn the thermostat dial clockwise.
2. To increase the temperature, turn the thermostat dial anti-clockwise.

- We do not recommend that you operate your Fridge Freezer in environments colder then 10°C as efficiency is reduced.
- Your Fridge Freezer is designed to operate in an ambient temperature of 16°C to 43°C.

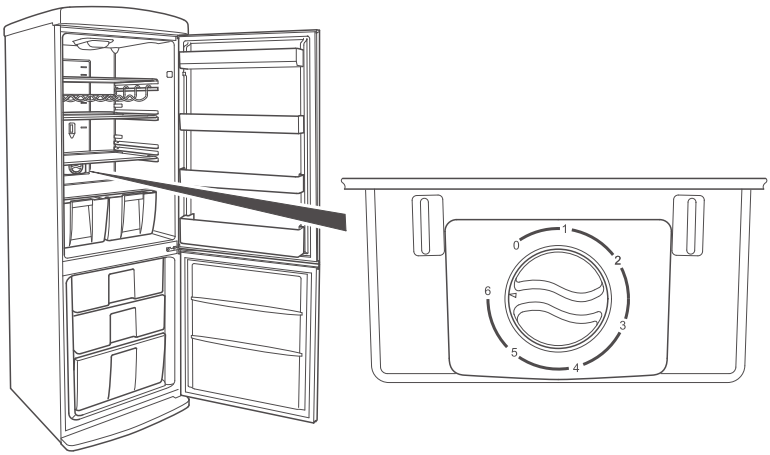

Figure 5

Usage

Before using your Fridge Freezer

- When using your Fridge Freezer for the first time, or after transportation, keep it in an upright position for at least 3 hours before plugging into the mains. This allows efficient operation and prevents damage to the compressor.
- We recommend that you wipe all shelving and trays with a cloth soaked in warm water mixed with a teaspoon of sodium bicarbonate before use. After cleaning, rinse with warm water and dry.
- You may notice a slight odour when using your Fridge Freezer for the first time. This is perfectly normal and will fade away once the fridge starts to cool.
- Before using your Fridge Freezer, make sure that it has been connected to an appropriate mains power supply and is switched on at the socket.
- When using your Fridge Freezer for the first time, set the thermostat to a value of 4 for the first 24 hours.
- Your Fridge Freezer has a 5 minute built in delay function, designed to prevent damage to the compressor. When power is applied to your Fridge Freezer, it will begin to operate normally after 5 minutes.

Food storage tips

Food storage guidance

To help you use your Fridge Freezer efficiently, please take the time to read the following tips and guidance.

Storage areas:
The circulation of air within your Fridge Freezer causes areas of different temperatures. It is recommended that you make use of these areas when storing your food. The coldest area of the Fridge compartment is at the bottom, above the vegetable and meat cases. We recommend that you use this area to store food that will perish easily, such as fish, ready meals, baked goods and dairy products. The warmest area of your Fridge is the top shelf of the door. We recommend that you store butter and cheeses on this shelf.

Storing food:
It is best to store your food covered or packaged, to prevent it from drying out, and to prevent smells affecting other food in your Fridge. Store fruit and vegetables loose in the vegetable containers. Avoid storing potatoes, onions and garlic in your refrigerator.

Other tips you might find helpful are:

- Wash your food before storage.
- Allow warm or hot food to cool down before storing. This helps to reduce power consumption.
- Keep as much space as possible between your items of food. This allows the cold air to circulate freely around them.
- Take care when storing tropical fruit such as pineapples as they can quickly deteriorate in lower temperatures.
- Divide and separate food into smaller pieces before storage.
- Cover or wrap food to prevent odours. We recommend that you store meat loosely covered as this allows air to circulate around the meat causing the surface to dry slightly, helping to prevent the growth of bacteria.
- Do not store food close to the lamp, or block the cover or the cooling compartment.

Food storage tips

The table below is a quick guide, showing you the most efficient way to store the major food groups in your refrigerator compartment.

Food	Storage duration	Location
Fruits and vegetables	1 week	Loose in vegetable holder
Fish and meat	2-3 days	Wrapped on glass shelf
Fresh cheese	3-4 days	Top door shelf
Butter and margarine	1 week	Top door shelf
Bottles, yogurt and milk	Refer to packaging	Top door shelf
Eggs	1 month	In egg holder

The Freezer compartment:

You should use the freezer compartment of your Fridge Freezer for storing food for long periods and making ice. Aim to freeze fresh food as quickly as possible so that it keeps its taste and appearance.

We recommend that you place food you would like to freeze in the upper tray of the freezer compartment for 24 hours before placing it next to other frozen foods. It is important that you do not exceed the maximum freezing capacity of your Fridge Freezer, this will help to ensure that your food freezes as quickly as possible. The maximum freezing capacity for freezing within a 24 hour period is 4.2 kg/24 hrs.

The storage durations of frozen food can be changed by a variety of factors, such as; the frequency of the doors opening and closing, thermostat settings, food types and the period of time that elapsed from when the food was acquired to the time it entered the freezer. It is important that you follow the packaging on frozen foods and do not exceed the storage duration.

The table below contains some recommendations on freezing.

Food	Preparation	Storage duration (months)	Thawing period at room temperature (hours)
Beef steak	Cut into single portions	6-10	1-2
Lamb	Cut into single portions	6-8	1-2
Minced meat	Packed in convenient portions	1-3	2-3
Sausage	Must be packed	1-2	Until thawed
Chicken and turkey	Packed in convenient portions	1-2	10-12
Freshwater fish (such as Trout)	Cleaned well inside and scaled. Washed and dried. Cut off head and tail where necessary	2	Until well thawed
Lean fish (such as Sea Bass)	Cleaned well inside and scaled. Washed and dried. Cut off head and tail where necessary	4-8	Until well thawed
Fatty fish (such as Mackerel)	Cleaned well inside and scaled. Washed and dried. Cut off head and tail where necessary	2-4	Until well thawed
Peas	Shelled and washed	12	May be used from frozen

WARNING: Do not re-freeze frozen food once it has thawed. It may be a danger to your health.

Ice cube tray:

You can make ice cubes using the ice cube tray supplied with your Fridge Freezer, fill the ice cube tray three quarters full with water and place it on the bottom of one of the freezer drawers.

Cleaning and care

The freezer compartment:

In the event of a power cut, please do not open the door of the freezer compartment. Your Fridge Freezer will preserve your frozen food in an ambient environmental temperature of 25°C for approximately 13 hours. This time period will be shorter if the ambient temperature is higher. When power is re-applied after a power cut your Fridge Freezer will not operate for 4-5 minutes. This is to allow the gas in the cooling system to balance and is perfectly normal.

Cleaning and care

From time to time it will be necessary to carry out cleaning of your Fridge Freezer.

- Before cleaning your Fridge Freezer, turn your mains power supply off and remove the plug from the socket.
- Do not wash your Fridge Freezer by pouring water on it.
- Use a warm, soapy cloth or sponge to the wipe the interior and exterior of your Fridge Freezer.
- Carefully remove all shelves and drawers by sliding outwards or upwards and clean with soapy water. Do not wash in a washing machine or dish washer.
- Clean the condenser at the back of your Fridge Freezer at least once a year with a soft brush or vacuum cleaner.
- Do not use solvents, abrasive cleaners, glass cleaners or all purpose cleaning agents to clean your Fridge Freezer. They may damage the plastic surfaces and other components with the chemicals they contain.

Cleaning the vaporisation container:

Your Fridge Freezer uses 'No Frost' technology and performs fully automatic defrosting. The water formed as a result of this automatic defrosting flows into the vaporisation container at the rear of your Fridge Freezer and evaporates. We recommend cleaning the vaporisation container at regular intervals to prevent odours from building up.

To clean the vaporisation container:

1. Remove the vaporisation container by unscrewing the 2 screws (a and b) (Figure 6)
2. Clean the vaporisation container with warm soapy water and dry with a cloth.
3. Re-fit the vaporisation container by screwing it back into position.

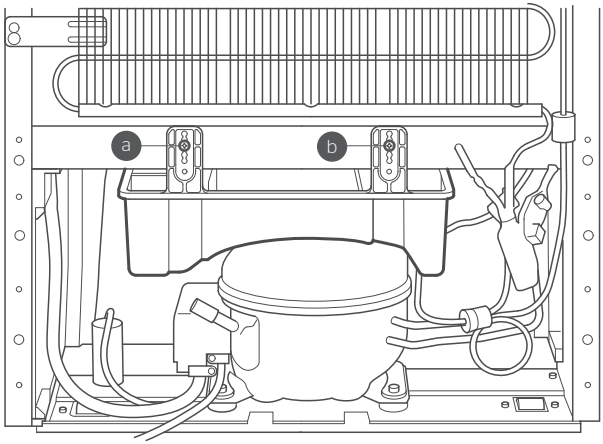

Figure 6

Cleaning and care

Replacing the lamp bulb:

1. Check that your Fridge Freezer is turned off and unplugged from the mains.
2. Apply light pressure to the sides of the light cover and carefully pull downwards. (Figure 7 a).
3. Unscrew the bulb by turning it clockwise, and remove (Figure 7 b).
4. Replace with a 15 Watt bulb.
5. Re-fit the light cover, by pushing it upwards until it clicks back into position (Figure 7 c).

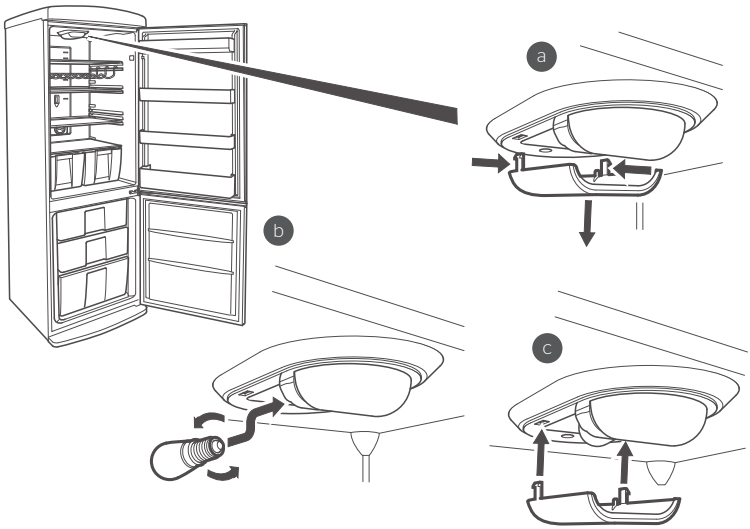

Figure 7

Troubleshooting

If your Fridge Freezer is not operating as expected, you may find a simple solution listed in the table below. If your Fridge Freezer has developed a fault not covered in this manual, please contact the Stoves services, spares and technical department.

Fault	Possible cause	Solution
Your Fridge Freezer does not operate.	It is switched off at the mains.	Check that your Fridge Freezer is plugged in and turned on at the mains.
Your Fridge Freezer does not get cold enough.	The thermostat is set too low.	Turn the thermostat to a higher value. (A setting of 6 will provide the lowest temperature).
	The doors are opened and closed too frequently.	Try to reduce the number of times the doors are opened and closed.
	The door seals are faulty.	Contact Stoves services, spares and technical department.
	The refrigerator compartment is overfilled.	Check that there is enough space between items to allow air circulation. Make sure that no items of food are blocking the air vents.
Food in the Freezer compartment is colder than necessary.	The thermostat setting may be too high.	Put the thermostat on a lower setting.
Your Fridge Freezer is noisy.	Your Fridge Freezer may not be level.	Adjust the feet to level your Fridge Freezer. See page 16.
	Please note that certain noises may heard from your Fridge Freezer during use. They are perfectly normal from a frost free Fridge Freezer and are not damaging your Fridge Freezer. Contact the Stoves services, spares and technical department if you have any concerns.	

Troubleshooting

Fault	Possible cause	Solution
There is moisture on the inner parts of your Fridge Freezer.	The doors are opened and closed too frequently.	Try to reduce the number of times the doors are opened and closed.
The doors do not close properly.	Items of food may prevent them from closing.	Make sure that the doors are free from obstruction.
	The shelves and drawers are not correctly in position.	Check that the shelves are drawers are properly placed in position.
	The door seal is damaged.	Contact the Stoves services, spares and technical department.
	Your Fridge Freezer is not level.	Adjust the feet to level your Fridge Freezer. See page 16.

Disposal of your old Fridge Freezer

All packaging and materials used are environmentally friendly and recyclable. Please dispose of any packaging in an environmentally friendly manner. Consult your local council for further details.

- When the Fridge Freezer is to be scrapped, cut off the electrical supply cable and destroy the plug with the remaining cable. Disable the door catch in order to prevent children from becoming trapped inside while playing. A cut off plug inserted into a 13 amp socket is a serious safety (shock) hazard. Please ensure the cut off plug is disposed of safely.



Please refer to the rear cover for disposal instructions.

Guarantee

The Stoves 1 year guarantee covers the cost of parts/labour/call out charges to repair an appliance should any covered component fail in its normal functions necessitating a repair or replacement to resume those functions.

The Stoves guarantee **does not** cover:

- Accidental or transit damage
- Use in a commercial environment
- Incorrect or faulty installation
- Deliberate damage or neglect
- Repairs to cosmetic parts (i.e. paintwork or light bulbs)
- Damage caused by foreign objects or substances
- Claims in respect to routine inspection or maintenance
- Repairs, or alterations carried out by parties other than Stoves or an authorised agent.

The Stoves guarantee is not transferable.
For your Stoves guarantee to be valid, you will need to retain your original purchase receipt and be able to provide it when you make a claim.

The above summary does not include all of the terms and conditions and exclusions which can be found on our website www.stoves.co.uk

Know your rights

Household contents insurance
Your household insurance may cover you for accidental damage, fire or theft of your product.

Data Protection Act (1988)
Please note that any information provided will be processed by us or our agents in compliance with the provisions of the Data Protection Act 1988, for the purpose or providing cover and handling claims, if any, which may necessitate providing such information to third parties.

Index

A

Adjusting the feet 16

C

Cleaning and care 22

D

Disposal 26

E

Ecological hints and tips 08
Electrical connection 13
Environmental information 09

F

Feet, adjustment 16
Food storage guidance 19
Fuse 13

G

Guarantee 27

I

Installation requirements 15

N

No frost technology 09

P

Power disruption 22

R

Replacing the lamp bulb 24

S

Safety instructions 05

T

Technical specification 14
Temperature control 17

W

Warranty 04

Notes

Notes

T: 0344 815 3740
E: gdhainfo@gdha.com (services, spares and technical)
www.stoves.co.uk

STOVES

The symbol on the product or on its packaging indicates that this product may not be treated as household waste. Instead it shall be handed over to the applicable collection point for the recycling of electrical and electronic equipment. By ensuring this product is disposed of correctly, you will help prevent potential negative consequences for the environment and human health, which could otherwise be caused by inappropriate waste handling of this product. For more detailed information about recycling of this product, please contact your local city office, your household waste disposal service or the shop where you purchased the product.

52246405