belling

EN

BUILT UNDER LARDER

User manual

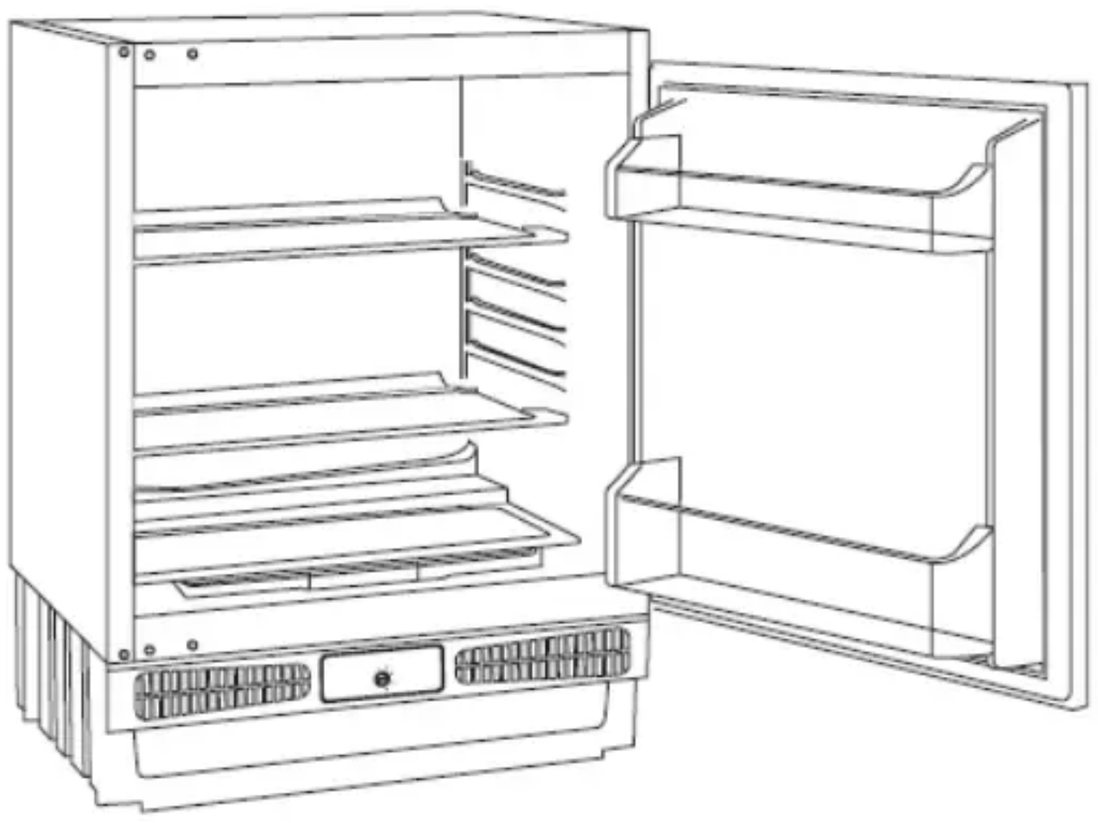

BU LF609
444410785

Index

BEFORE USING THE APPLIANCE 3
General warnings 3
Safety warnings.....5
Installing and operating your fridge 6
Before Using your Fridge 6
HOW TO OPERATE THE APPLIANCE.....7
Thermostat setting 7
FOOD STORAGE IN THE APPLIANCE.....8
CLEANING AND MAINTENANCE.....8
Defrosting the Refrigerator 9
Replacing the Light bulb.....9
SHIPMENT AND REPOSITIONING.....10
BEFORE CALLING YOUR AFTER SALES SERVICE.....10
Tips For Saving Energy.....12
PARTS OF THE APPLIANCE AND THE COMPARTMENTS ..12
Installation instructions.....13

The operating instructions apply to several models. Differences may therefore occur.

PART 1. BEFORE USING THE APPLIANCE

General warnings

WARNING: Keep ventilation openings, in the appliance enclosure or in the built-in structure, clear of obstruction.

WARNING: Do not use mechanical devices or other means to accelerate the defrosting process, other than those recommended by the manufacturer.

WARNING: Do not use electrical appliances inside the food storage compartments of the appliance, unless they are of the type recommended by the manufacturer.

WARNING: Do not damage the refrigerant circuit.

WARNING: To avoid a hazard due to the instability of the appliance, it must be fixed in accordance with the instructions.

- If your appliance uses R600a as a refrigerant – you can learn this information from the label on the cooler- you should be careful during shipment and installation to prevent your appliance's cooler elements from being damaged. Although R600a is an environmentally friendly and natural gas, it is explosive. In the event of a leak caused by damage to the cooler elements, move your fridge from open flame or heat sources and ventilate the room where the appliance is located for a few minutes.
- While carrying and positioning the fridge, take care not to damage the cooler gas circuit.
- Do not store explosive substances such as aerosol cans with a flammable propellant in this appliance.
- This appliance is intended to be used in households and similar applications such as;
  - staff kitchen areas in shops, offices and other working environments

- farm houses and by clients in hotels, motels and other residential type environments
- bed and breakfast type environments;
- catering and similar non-retail applications

- If the socket does not match the refrigerator plug, it must be replaced by the manufacturer, its service agent or similar qualified persons in order to avoid a hazard.
- This appliance is not intended for use by persons (including children) with reduced physical, sensory or mental capabilities, or lack of experience and knowledge, unless they have been given supervision or instruction concerning use of the appliance by a person responsible for their safety. Children should be supervised to ensure that they do not play with the appliance.
- A specially grounded plug has been connected to the power cable of your refrigerator. Insert the plug into a socket withan efficient ground connection. If the socket has no ground contact or the plug does not match, we suggest you to call an authorized electrician for assistance.
- This appliance can be used by children aged from 8 years and above and persons with reduced physical, sensory or mental capabilities or lack of experience and knowledge if they have been given supervision or instruction concerning use of the appliance in a safe way and understand the hazard involved. Children should not play with the appliance. Cleaning and user maintenance should not be made by children without supervision.
- If the supply cord is demaged, it must be replaced by the manufacturer, its service agent or similar qualified persons in order to avoid a hazard.
- This appliance is not intended for use at altitudes exceeding 2000 m.

Old and out-of-order fridges

- If your old fridge has a lock, break or remove the lock before discarding it, because children may get trapped inside it and may cause an accident.
- Old fridges and freezers contain insulation material and refrigerant with CFC. Therefore, take care not to harm the environment when you are discarding your old fridges.

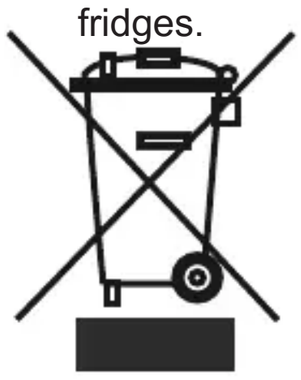

- Please ask your municipal authority about the disposal of the WEEE for the reuse, recycle and recovery purposes.

Notes:

- Please read the instruction manual carefully before installing and using your appliance. We are not responsible of the damage occurred due to misuse.
- Follow all instructions on your appliance and instruction manual, and keep this manual in a safe place to resolve the problems that may occur in the future.
- This appliance is produced to be used at houses and it can only be used in house and for the specified purposes. It is not suitable for commercial or common use. Such use will cause the guarantee of the appliance to be cancelled and our company will not be responsible for the losses to be occurred.
- This appliance is produced to be used in houses and it is only suitable for cooling / storing foods. It is not suitable for commercial or common use and/or for storing substances except for food. Our company is not responsible for the losses to be occurred in the contrary case.

Safety warnings

- Do not use multiple receptacles or extension cord.
- Do not plug in damaged, torn or old plugs.
- Do not pull, bend or damage the cord.



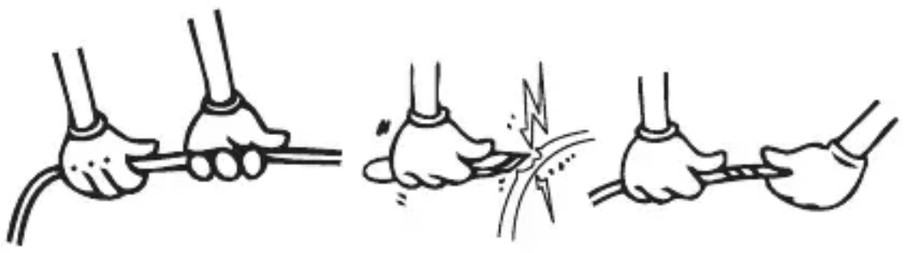

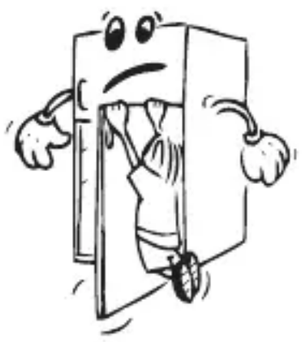



- This appliance is designed for use by adults, do not allow children to play with the appliance or let them to hang over the door.
- Do not plug-in or out the plug from the receptacle with wet hands to prevent electrocution!
- Do not place explosive or flammable material in your fridge for your safety. Place drinks with higher alcohol amount vertically and by closing their necks tightly in the fridge.
- Do not cover the body or top of fridge with lace. This affects the performance of your fridge.
- Fix the accessories in the fridge during transportation to prevent damage to accessories.

Installing and operating your fridge

Before starting to use your fridge, you should pay attention to the following points:

- Operating voltage for your fridge is 220-240 V at 50Hz.
- The plug must be accessible after installation.
- There can be an odour when you first switch on the appliance. It will disappear after the appliance starts to cool.
- Before making the connection to the power supply, ensure that the voltage on the nameplate corresponds to the voltage of electrical system in your home.
- Insert the plug into a socket with an efficient ground connection. If the socket has no ground contact or the plug does not match, we suggest you to call an authorized electrician for assistance.
- The appliance must be connected with a properly installed fused socket. Power supply (AC) and voltage at the operating point must with the details on the name plate of the appliance (name plate is located on the inside left of the appliance).
- We do not take responsibility for damages that occur due to ungrounded usage.
- Place your fridge in a place that it would not be exposed to direct sunlight.
- Your fridge should never be used outdoors or left under the rain.
- Your appliance should be at least 50 cm away from stoves, Gas ovens and heater cores, and should be at least 5 cm away from electrical ovens.
- When your fridge is placed next to a deep freezer, there should be at least 2 cm between them to prevent humidity on the outer surface.
- Do not place heavy items on the appliance.
- Clean the appliance thoroughly, especially in the interior, before use (See Cleaning and Maintenance).
- Installation procedure is given in the Installation Manual. This product is intended to be used in proper kitchen units only.
- The adjustable front legs should be adjusted to an appropriate height to allow your freezer to operate in a stable and proper way. You can adjust the legs by turning them clockwise (or in the opposite direction). This should be done before placing food in the freezer.
- Before using your fridge, wipe all parts with warm water added with a tea spoonful of sodium bicarbonate, and then rinse with clean water and dry. Place all parts after cleaning.



Before Using your Fridge

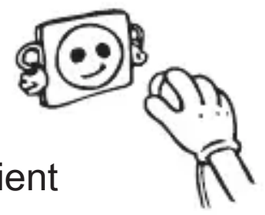

- When it is operated for the first time or after transportation, keep your fridge in the upright position for 3 hours before plugging it in to allow efficient operation. Otherwise, you may damage the compressor.
- Your fridge may have a smell when it is operated for the first time; the smell will fade away when your fridge starts to cool.

PART 2. HOW TO OPERATE THE APPLIANCE

Thermostat setting

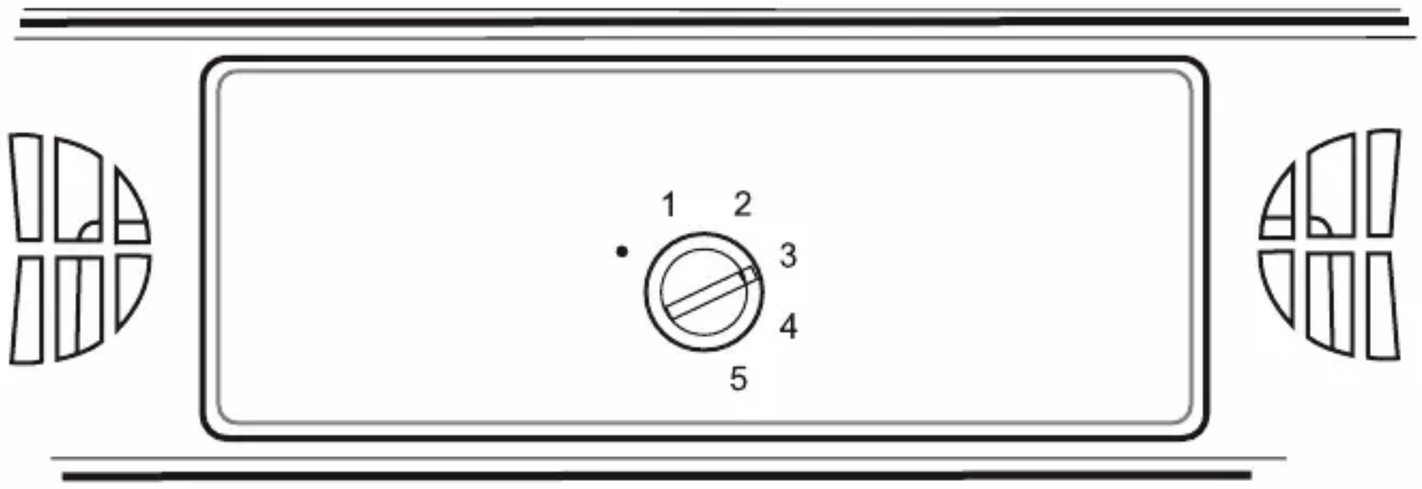

The thermostat automatically regulates the inside temperature of the refrigerator. By rotating the knob from position 1 to 5, colder temperatures can be obtained.

Important note: Do not try to rotate knob beyond 1 position it will stop your appliance.

- For short-term storage of food in the fridge, you can set the knob between minimum and medium position (1-3).
- For long-term storage of food in the fridge, you can set knob medium position. (3-4)
- Note that; the ambient temperature, temperature of the freshly stored food and how often the door is opened, affects the temperature in the fridge. If required, change the temperature setting.
- When you first switch on the appliance, you should ideally try to run it without any food in for 24 hours and not open the door. If you need to use it straight away, try not to put much food inside.
- If the unit is switched off or unplugged, you must allow at least 5 minutes before restarting in order not to damage the compressor.
- The larders (coolers) have not any freezer compartment but can cool up to 4 - 6 °C.

PART 3. FOOD STORAGE IN THE APPLIANCE

The fridge is used for storing fresh food for few days.

- Do not place food in direct contact with the rear wall of the refrigerator. Leave some space around food to allow circulation of air.
- Do not place hot food or evaporating liquid in the refrigerator.
- Always store food in closed containers or wrapped.
- To reduce humidity and avoid formation of frost, never place liquids in unsealed containers in the refrigerator.
- Meat of all types, wrapped in packages, is recommended to be placed on the glass shelf just above the vegetable bin, where the air is colder.
- You can put fruits and vegetables into the crisper without packing.
- To avoid the cold air escaping, try not to open the door too often, and not leave the door open for a long time.

PART 4. CLEANING AND MAINTENANCE

- Disconnect the appliance from the power supply before cleaning.



- Do not wash your fridge by pouring water on it.



- The refrigerator should be cleaned periodically using a solution of bicarbonate of soda and lukewarm water.



- You can wipe the inner and outer sides with a soft cloth or a sponge using warm and soapy water.



- Clean the accessories separately with soap and water. Do not put them in the dishwasher.



- Do not use abrasive products, detergents or soaps. After washing, rinse with clean water and dry carefully. When the cleaning operations have been completed, reconnect the plug with dry hands.

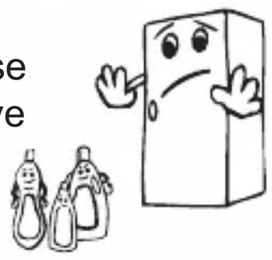

Defrosting the Refrigerator

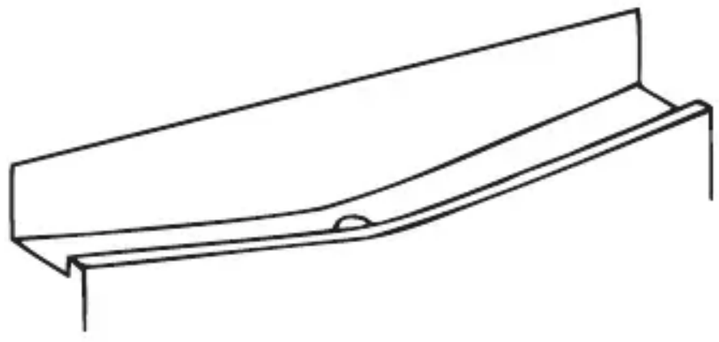

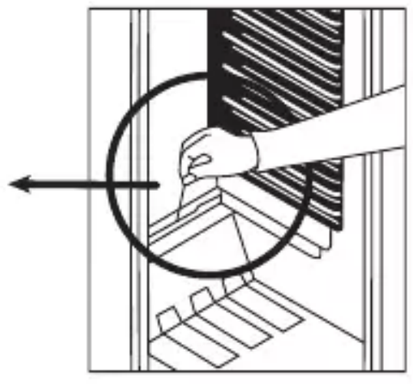

- Defrosting occurs automatically in refrigerator during operation; the defrost water is collected by the evaporating compartment and evaporates automatically.
- The defrost water drain hole should be cleaned periodically with the defrost drain plug removed to prevent the water from collecting in the bottom of the refrigerator instead of flowing out.
- You can also pour ½ glass of the water to drain hole to clean inside.

Replacing the Light bulb

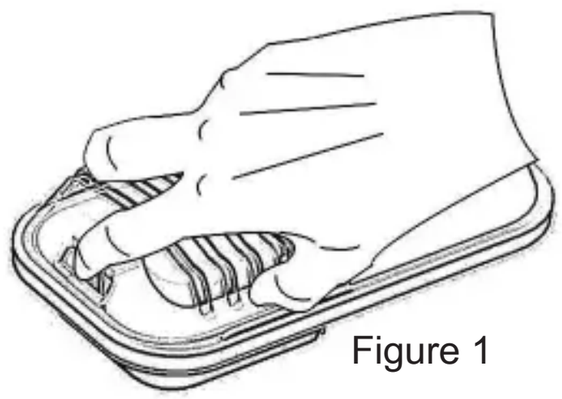

Figure 1

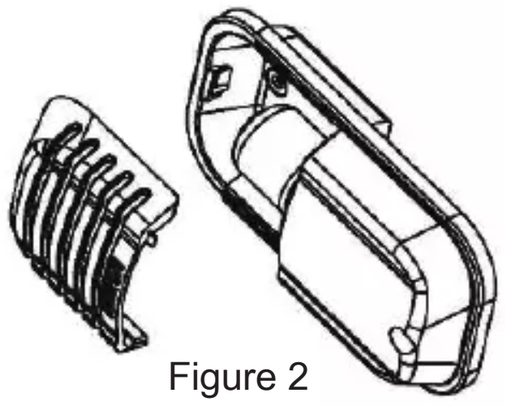

Figure 2

When replacing the bulb of the refrigerator;

1. Unplug the unit from the power supply,
2. Press the hook in front of the light cover as in Figure 1 and remove the light cover,
3. Change the present light bulb with a new one of not more than 15 W.
4. Replace the light cover and after waiting 5 minutes plug the unit.

Replacing LED Lighting

If your refrigerator has LED lighting contact the help desk as this should be changed by authorized personnel only.

PART 5. SHIPMENT AND REPOSITIONING

Transportation and changing of installation position

- Original package and foam may be kept for re-transportation (optionally).
- You should fasten your fridge with thick package, bands or strong cords and follow the instructions for transportation on the package for re-transportation.
- Remove movable parts (shelves, accessories, vegetable bins etc.) or fix them into the fridge against shocks using bands during re-positioning and transportation.

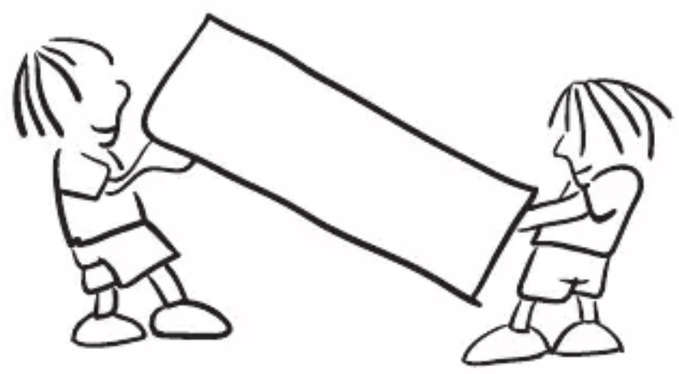

PART 6. BEFORE CALLING YOUR AFTER SALES SERVICE

If your refrigerator is not working properly, it may be a minor problem, therefore check the following.

The appliance does not operate,

Check if;

- There is a power failure,
- The mains plug is not properly plugged in, or is loose
- The thermostat setting is on position “•“,
- The socket is defective. To check this, plug in another appliance that you know which is working into the same socket.

The appliance performs poorly;

Check if;

- You have overloaded the appliance,
- The door is not closed perfectly,
- There are not enough ventilation ducts in the kitchen unit as mentioned in the installation manual.

If there is noise;

The cooling gas which circulates in the refrigerator circuit may make a slight noise (bubbling sound) even when the compressor is not running. Do not worry, this is quite normal. If these sounds are different check if;

- The appliance is installed firmly as described in the installation manual.
- Objects on the appliance are vibrating.

If there is water in the lower part of the refrigerator;

Check if;

The drain hole for defrost water is not clogged (use defrost drain plug to clean the drain hole).

If your fridge is not cooling enough;

Your fridge is designed to operate in the ambient temperature intervals stated in the standards, according to the climate class stated in the information label. We do not recommend operating your fridge out of stated temperatures value limits in terms of cooling effectiveness.

Climate Class	Ambient Temperature °C
T	Between 16 and 43 (°C)
ST	Between 16 and 38 (°C)
N	Between 16 and 32 (°C)
SN	Between 10 and 32 (°C)

This appliance is designed for use at an ambient temperature within the 16°C - 32°C range.

Recommendations

- When there is no power, to prevent any compressor problem you should unplug the refrigerator. You should delay pluging in 5 – 10 minutes after you switch back on.
- If you unplug the refrigerator for any reason you should wait at least 5 min to replug. It is important for avoiding damage to refrigerator's components.
- The cooling unit of your refrigerator is hidden in the rear wall. Therefore, water droplets or icing may occur on the rear surface of your fridge due to the operation of the compressor in specified intervals. This is normal. There is no need to perform a defrosting operation unless the icing is excessive.
- If you will not use your fridge for a long time (e.g. in summer holidays), put the thermostat to «•» position. After defrosting, clean your fridge and leave the door open to prevent humidity and smell.
- If the problem persists after you have followed all the instructions above, please consult to the nearest Authorised Service.
- The appliance you have purchased is designed for home type use and can be used only at home and for the stated purposes. It is not suitable for commercial or common use. If the consumer use the appliance in a way that does not comply with these features, we emphasise that the producer and the dealer shall not be responsible for any repair and failure within the guarantee period.

Tips For Saving Energy

1. Install the appliance in a cool, well ventilated room , but not in direct sunlight and not near heat source (radiator, cooker.. etc). Otherwise use an insulating plate.
2. Allow warm food and drinks to cool down outside the appliance.
3. When placing, drinks and liquids they must be covered. Otherwise humidity increases in the appliance, therefore the working time gets longer. Also covering drinks and liquids helps to save smell and taste.
4. When placing food and drinks in the refrigerator, open the appliance door as briefly as possible.
5. Keep the covers closed of any different temperature compartment in the appliance (crisper, chiller ...etc).
6. The door gasket must be clean and pliable. Replace gaskets if worn.

PART 7. PARTS OF THE APPLIANCE AND THE COMPARTMENTS

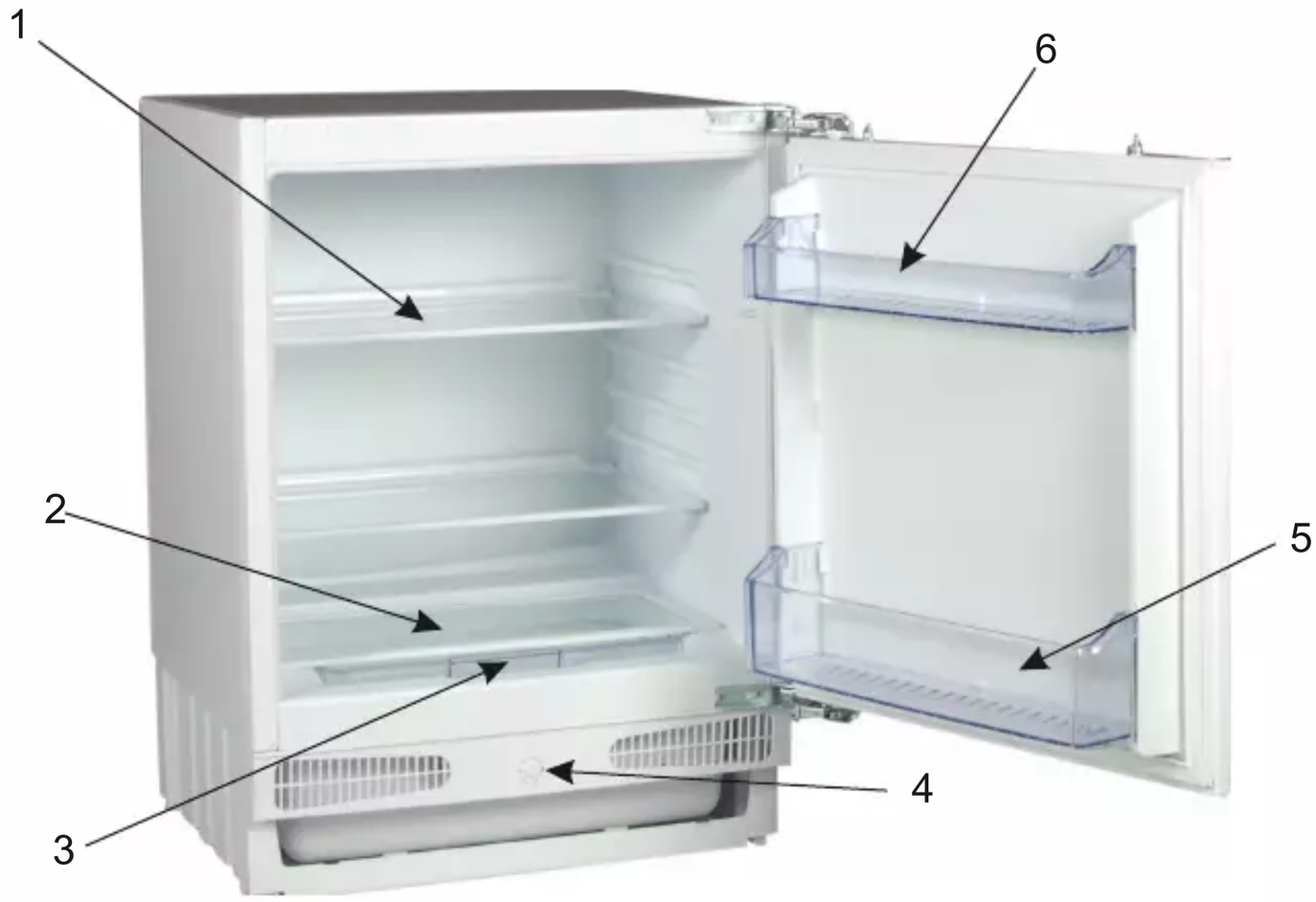

The purpose of this presentation is informing you about the parts of your appliance.
The parts may vary depending on the model of the appliance.

1) Fridge shelves
2) Crisper cover
3) Crisper
4) Thermostat knob
5) Door shelves
6) Egg holder

Installation instructions

Installation Kit Contents



1. Wood screw x17

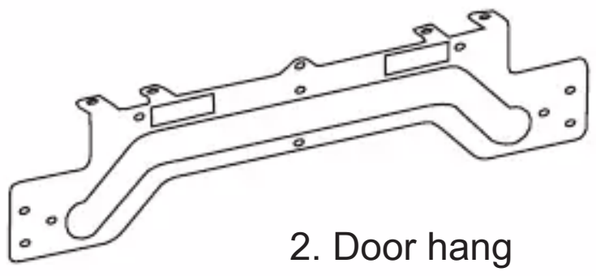

2. Door hang

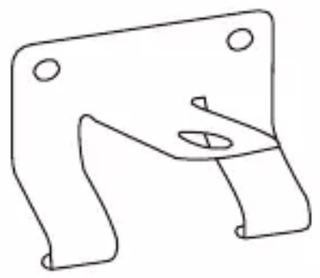

3. Door Bottom Fixings x2

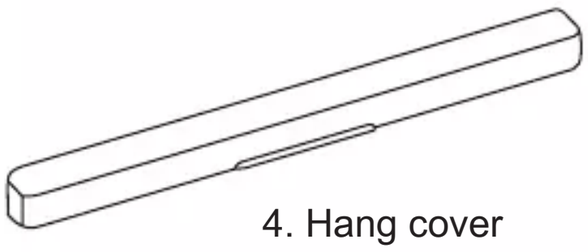

4. Hang cover

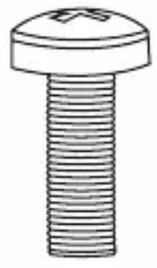

5. Screw



6. Top bracket

Tools Required

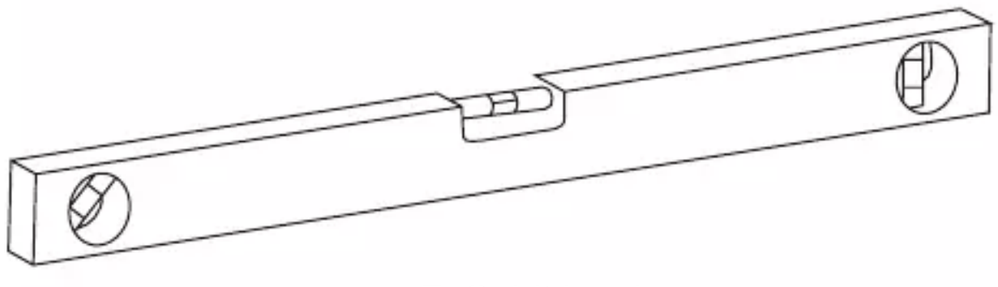

7. Spirit level

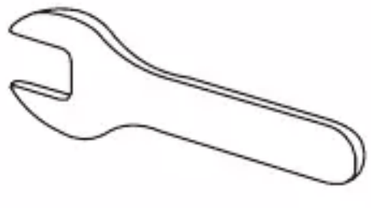

8. Wrench

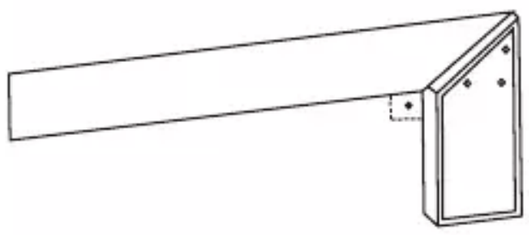

9. Setsquare

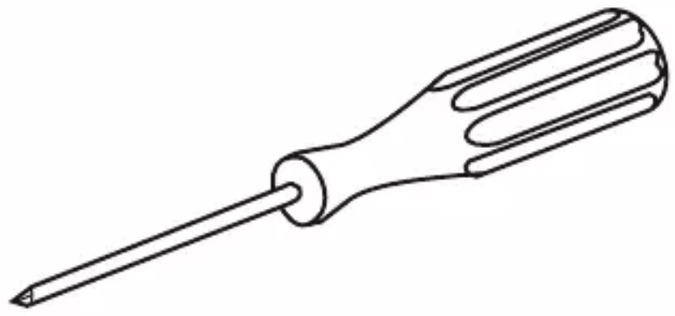

10. Screwdriver

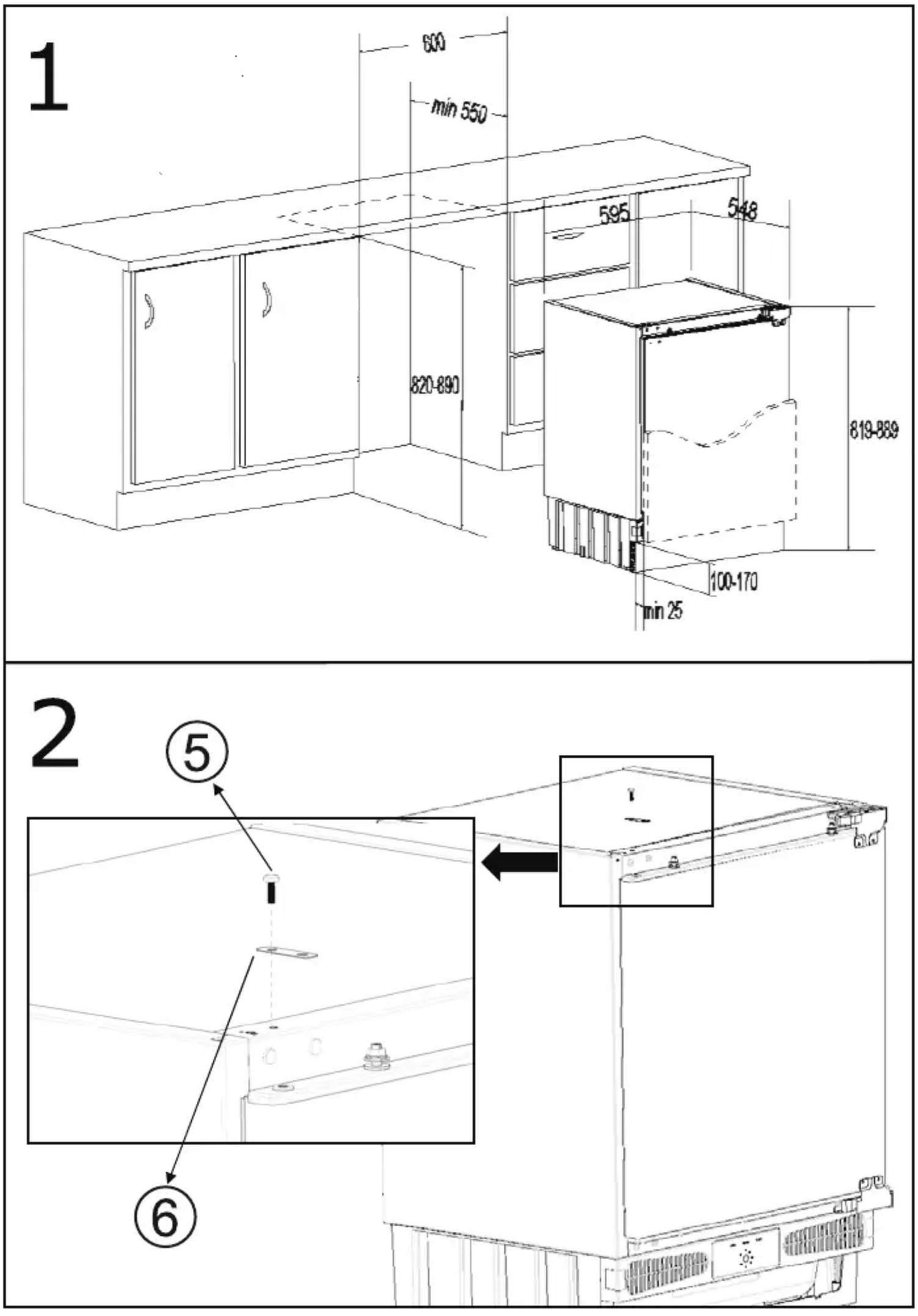
1
600
min 550
595
548
820-890
819-889
100-170
min 25
2
5
6

3

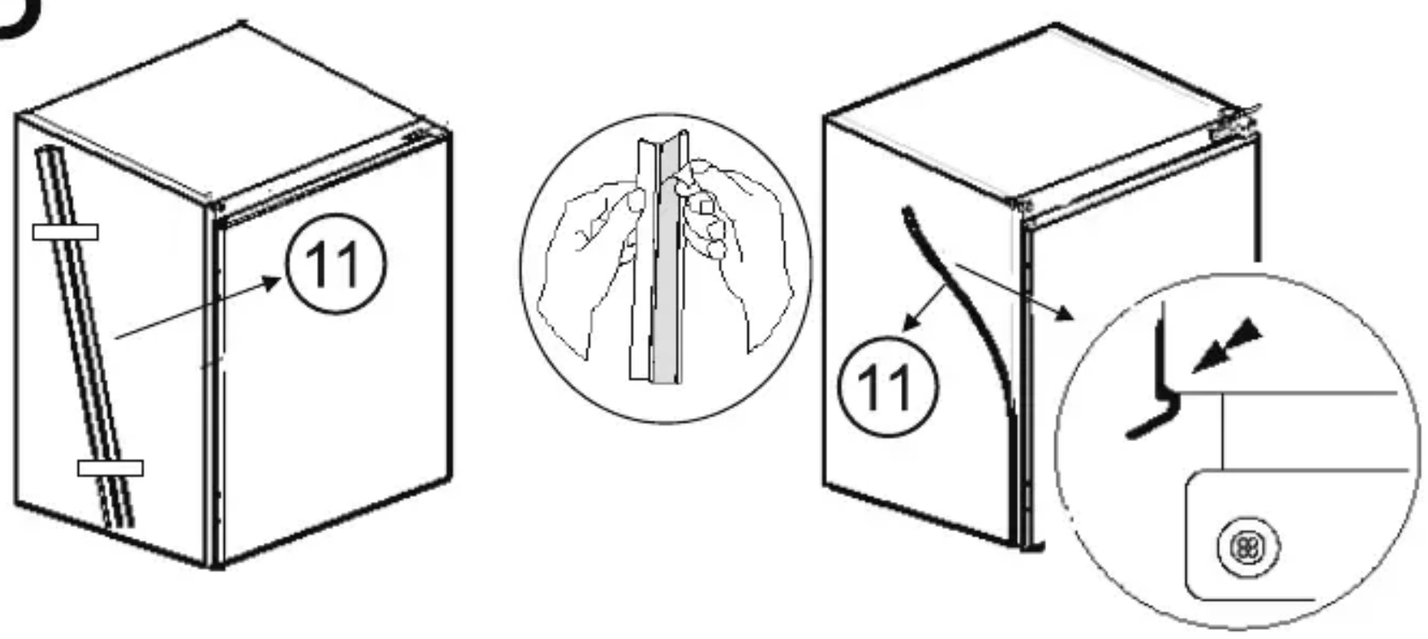

4

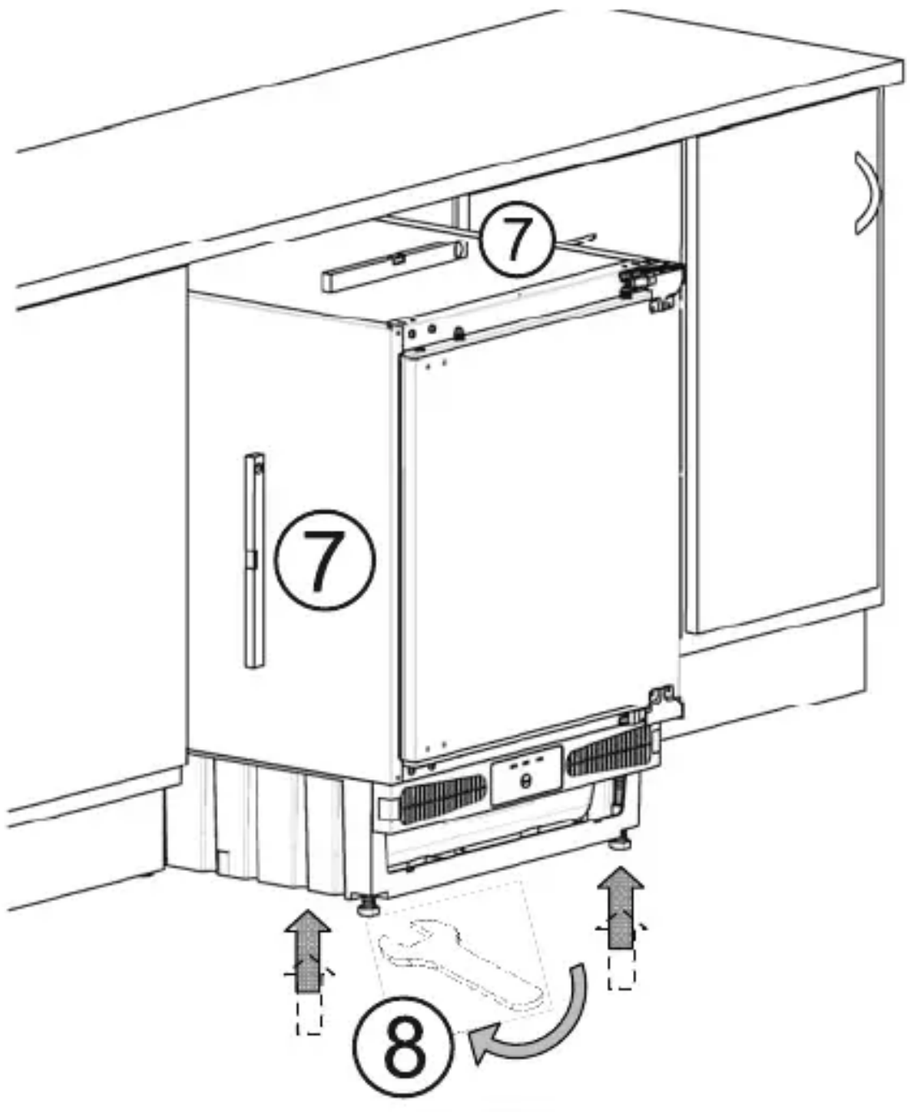

5

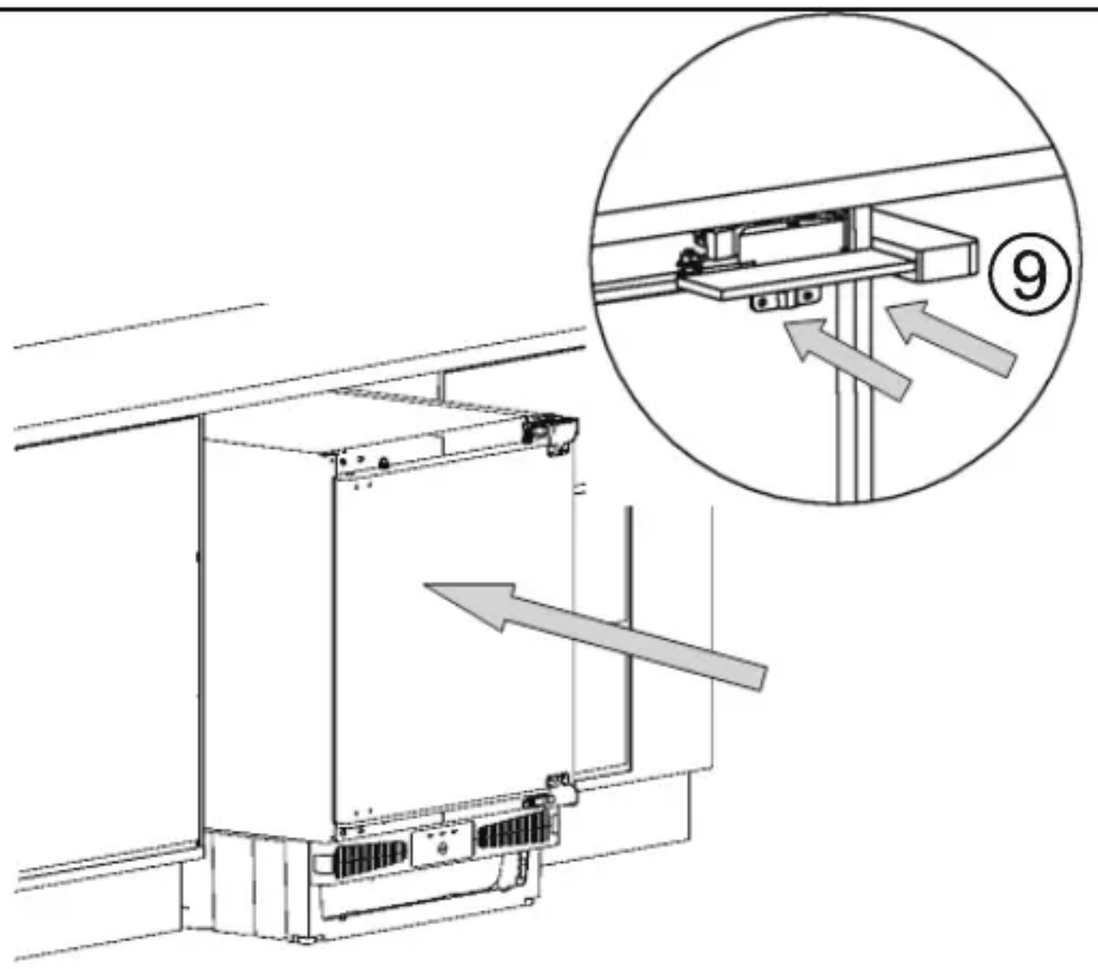

6

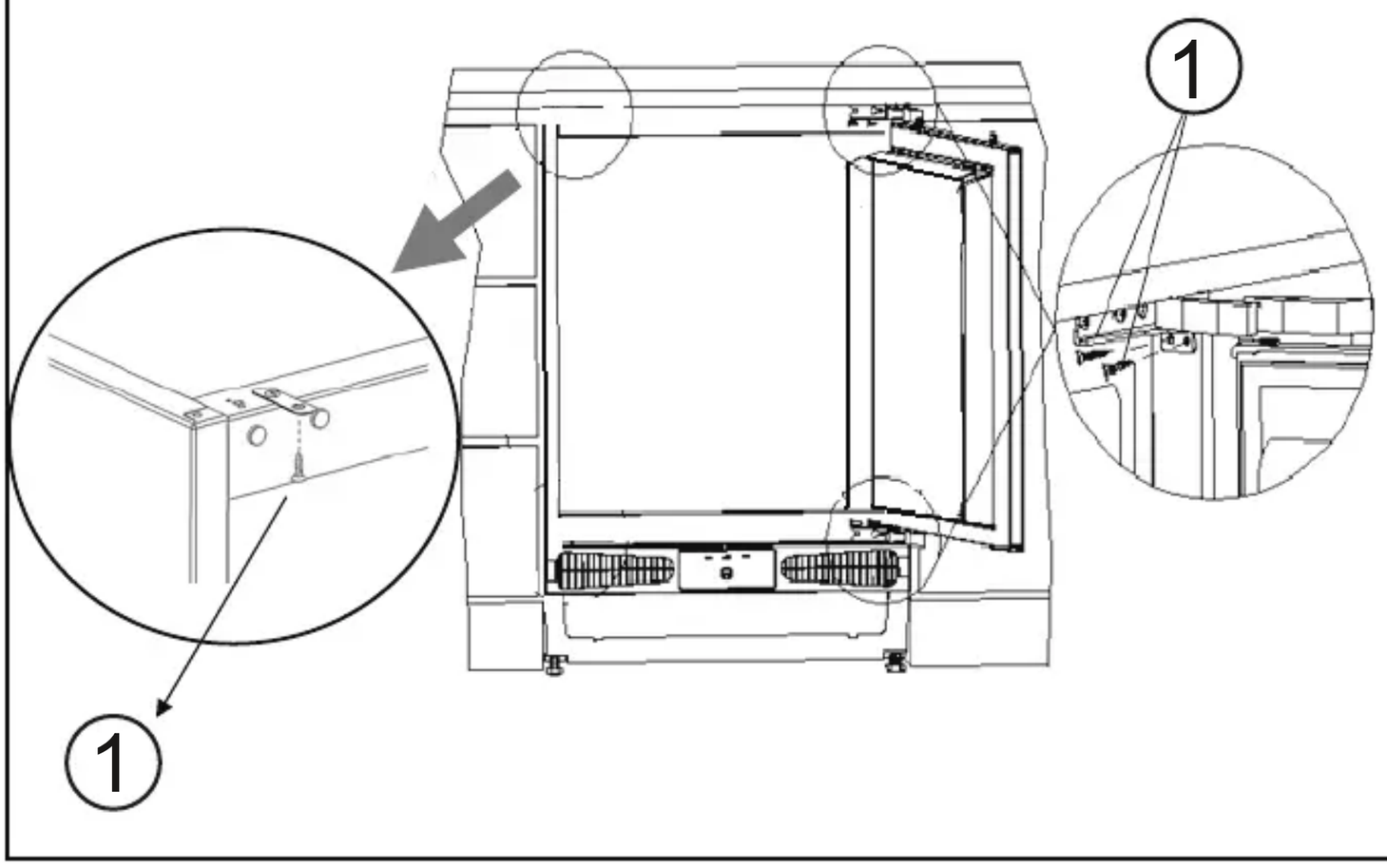

7



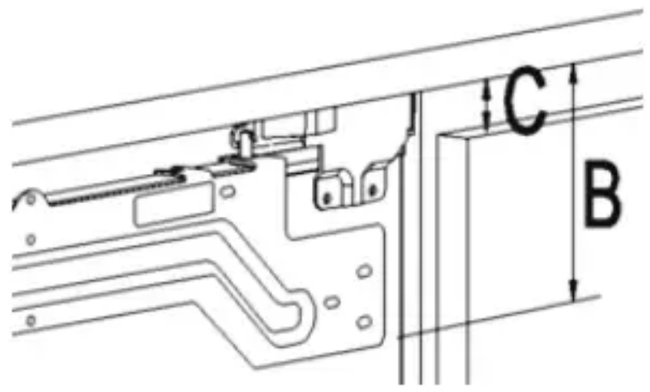

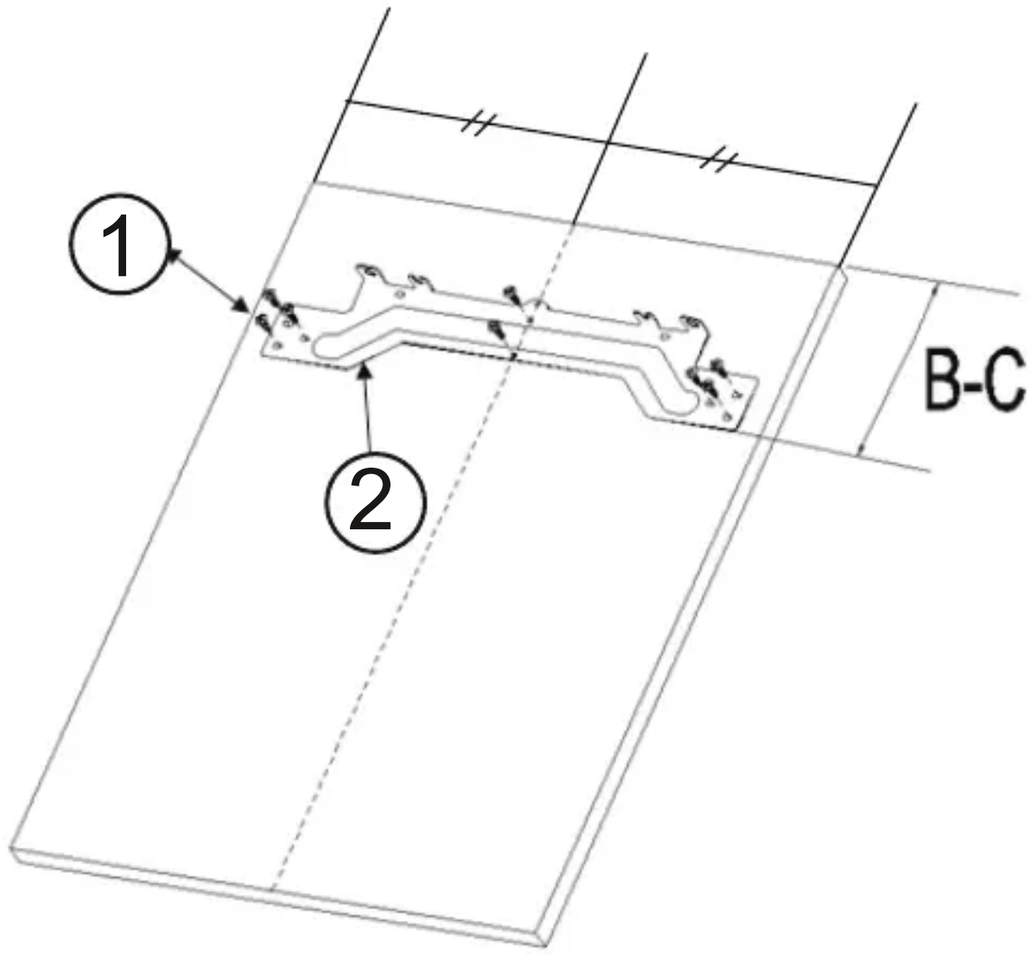

8

9

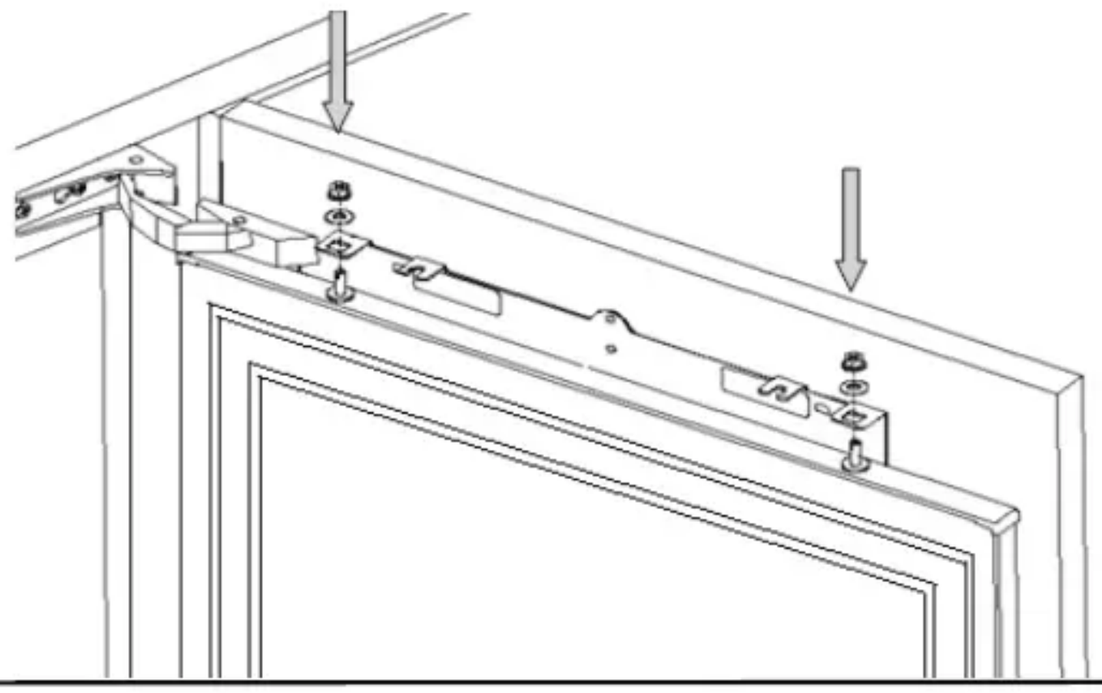

10

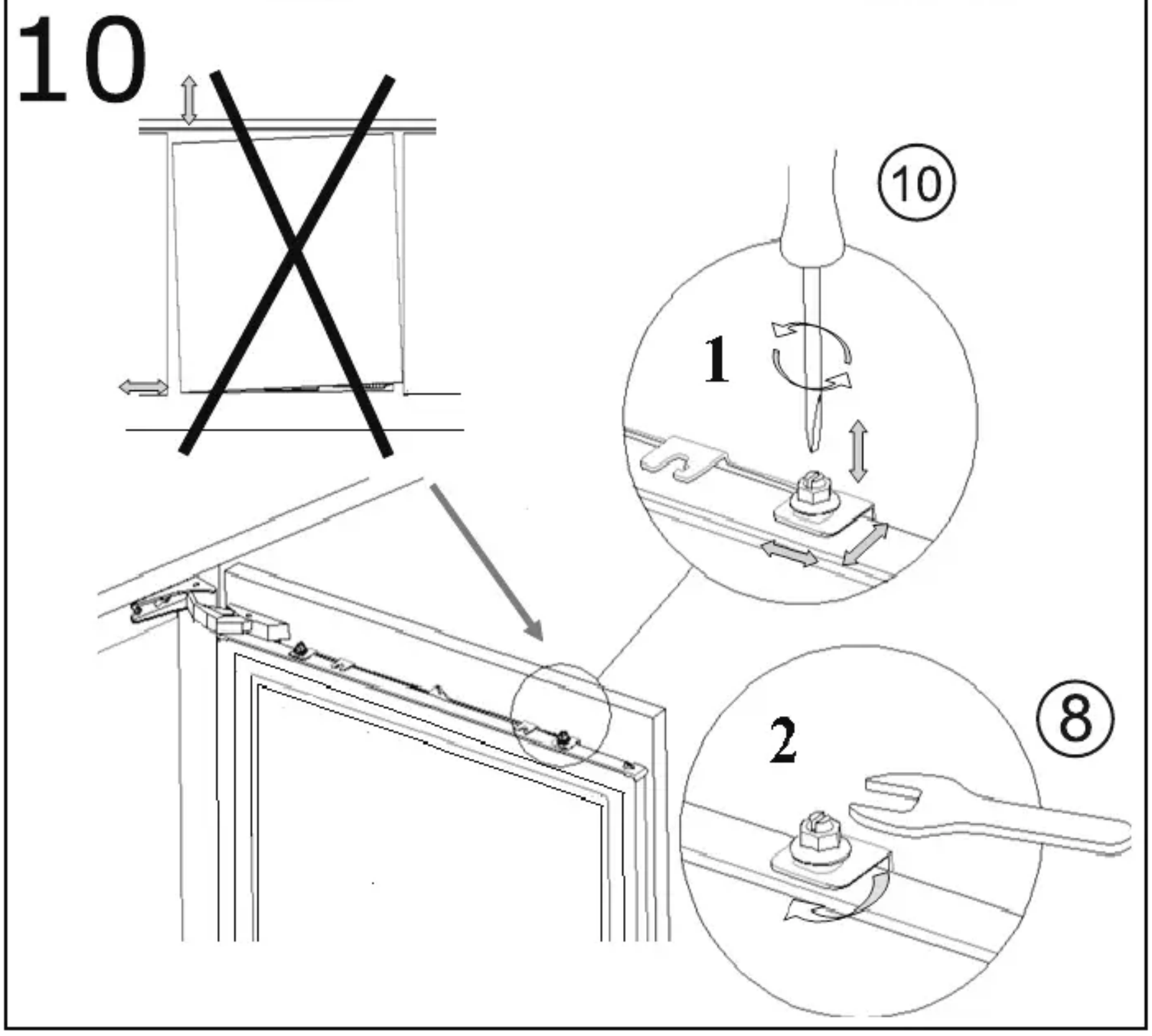

11

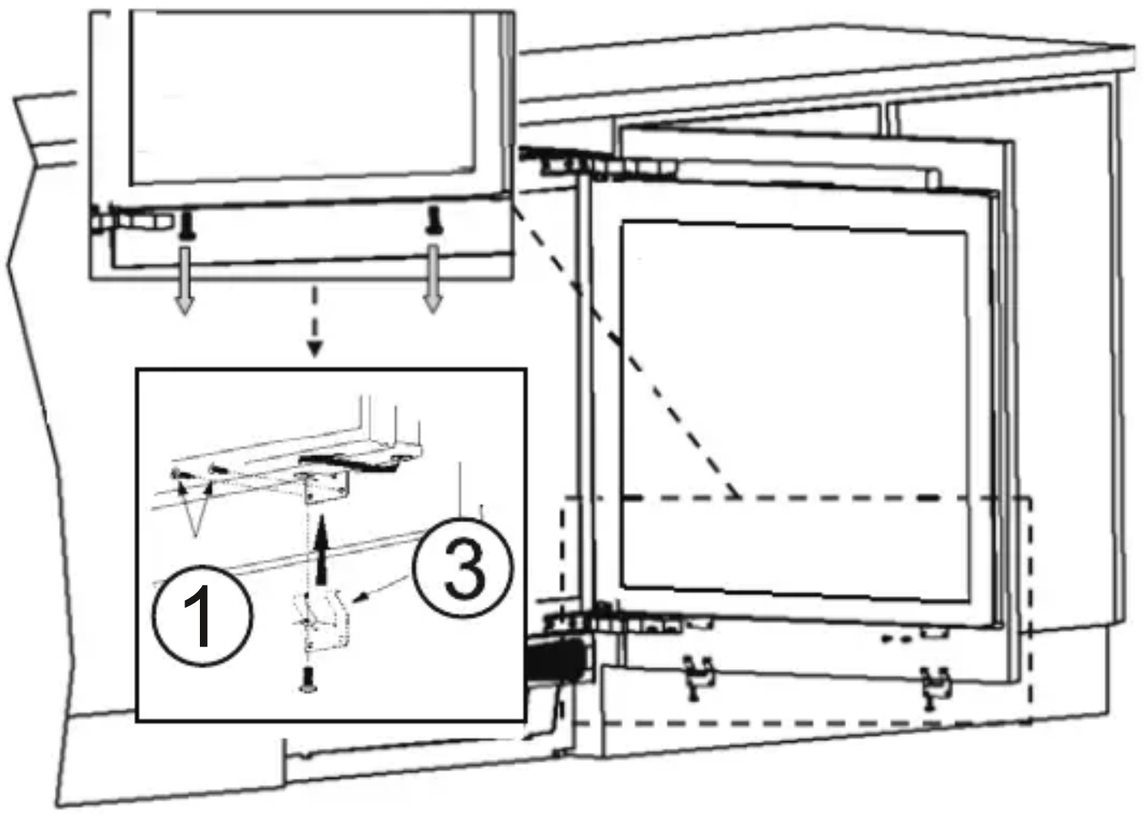

12

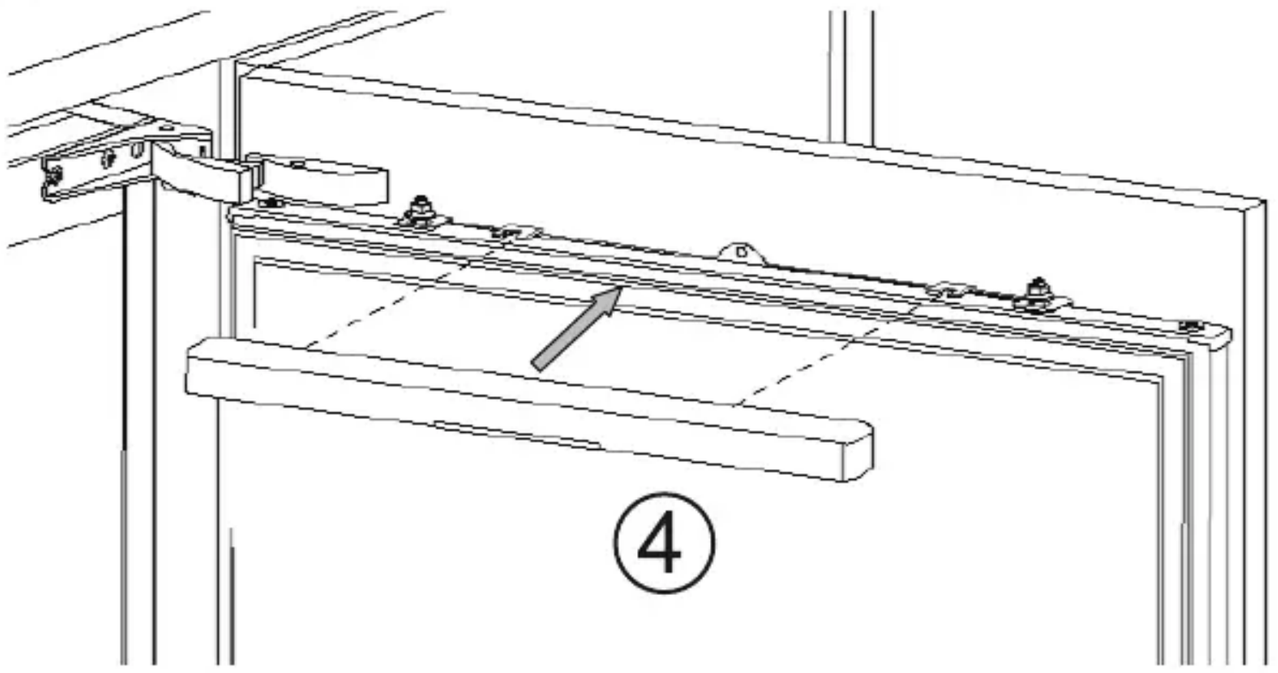

13

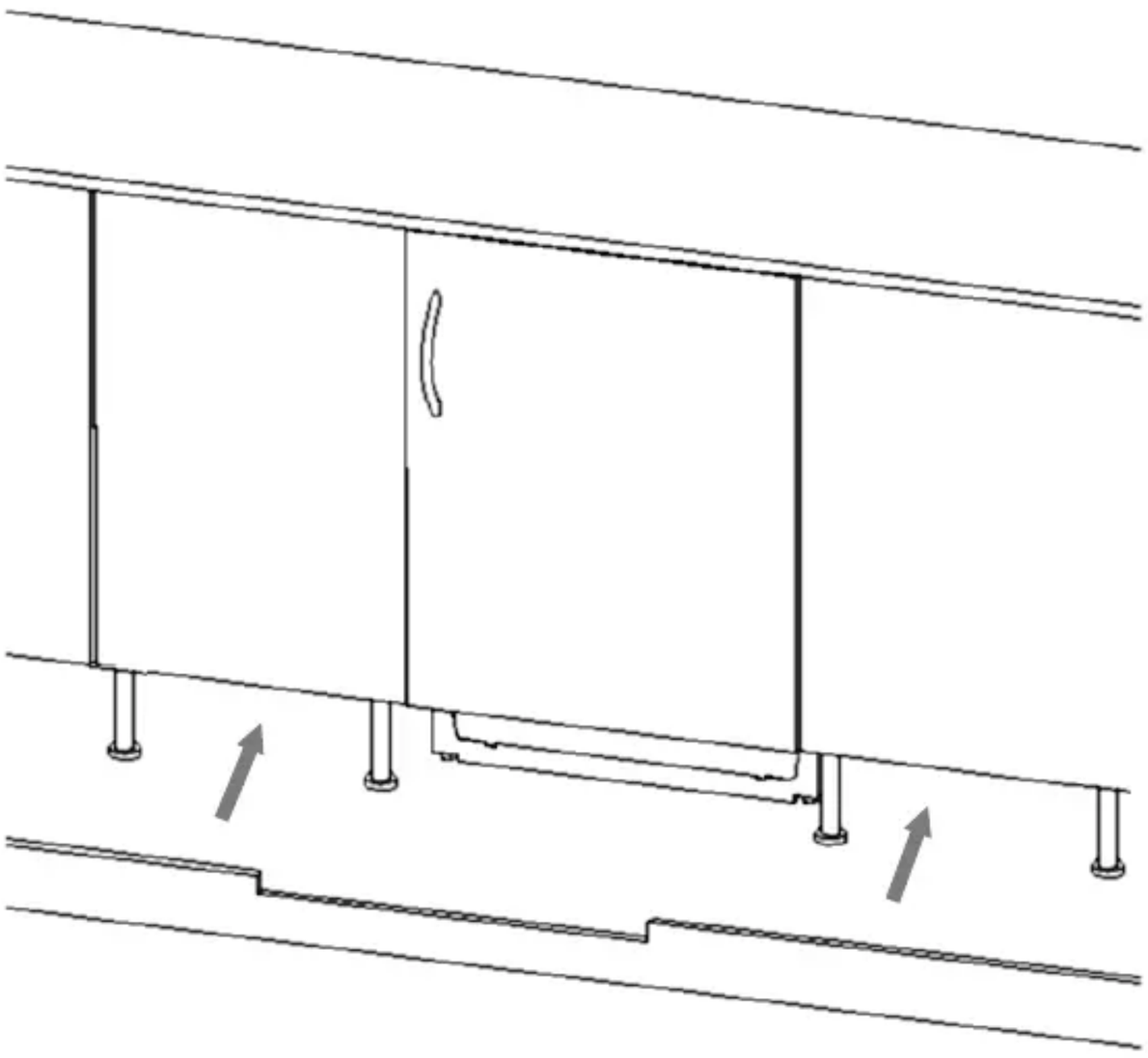

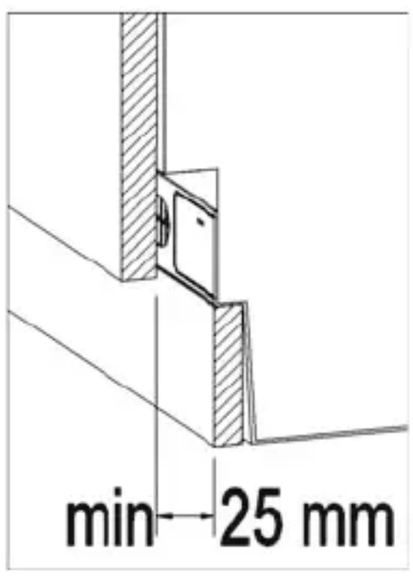

Reversing the door

a: Unscrew the screws on the front surface of the appliance door. Take the appliance door to a safe place.
b: Move the hole plugs on the appliance door’s front surface, to the holes on the reverse side.
c: Open the door upper hinge and door lower hinge, disassemble them.
d: Move the hole plugs to opposite side.
e: Assemble the door upper hinge and door lower hinge to the opposite corners of their original position.
f: Assemble the appliance door.

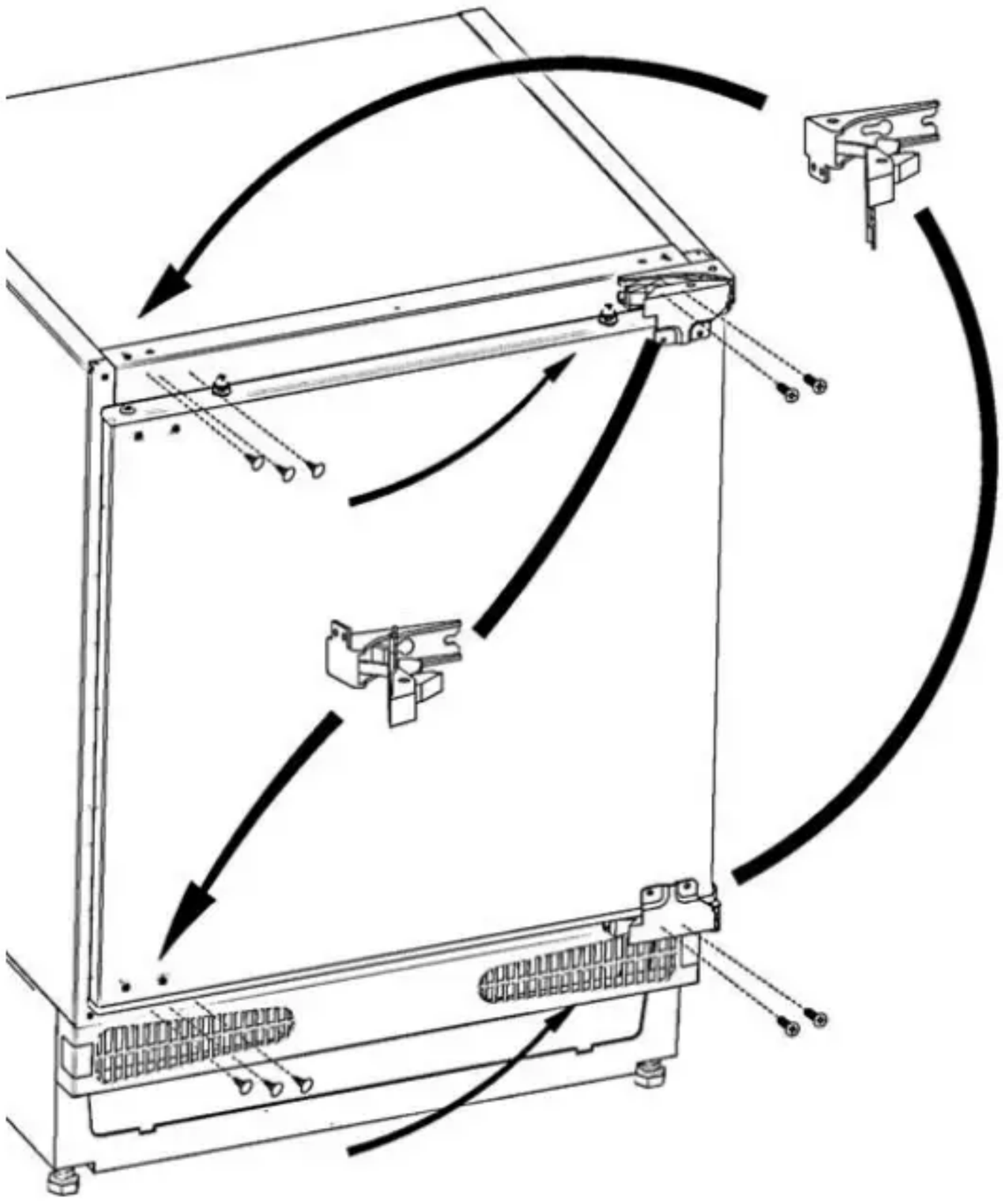

EN	PRODUCT FICHE	
1	Brand	BELLING
2	Model	BEL BU LF609
3	Product category	1 (Refrigerator)
4	Energy class	A+
5	Annual energy consumption*	115 kWh
6	Total gross volume	136 l
7	Total net volume	133 l
8	Refrigerator gross volume	136 l
9	Refrigerator net volume	133 l
10	Chiller compartment net volume	- l
11	Freezer gross volume	- l
12	Freezer net volume	- l
13	Star rating	
14	Refrigeration system	STATIC
15	Temperature rise time (-18°C/-9°C)	- Hours
16	Freezing capacity	- kg / 24 h
17	Climate class **	SN (10°C - 32°C)
18	Noise emission	39 dB(A)
*	Energy consumption of 115 kWh kWh per year, calculated on the basis of results obtained in 24 hours under normalised test conditions. Real energy consumption depends on the conditions in which the equipment is used as well as where it is placed.	
**	This appliance is designed for use at an ambient temperature within the 10°C - 32°C range.	

Belling Customer Care

Please keep this handbook in a safe place as the information inside may be of use should you sell, or pass on the appliance. Please fill in the model number and serial number in the spaces provided below as they will assist us should you need to call.

0344 8153746

When you dial this number, you will hear a recorded message and be given several options. This indicates that your call has b een ac cepted and is being held in a queue. calls are answered in strict rotation as our Customer care representatives become available.

Enter the appliance numbers here for future reference:

Model No

4	4	4						

Serial No

These numbers can be found on your appliances data badge. Outside the UK and Northern Ireland, refer to your local supplier.

CE

52219851