设 计 DESIGN	林芳芳 2022.11.30	图纸名称 PART NAME Midea MDRD168FG系列(CE-BC113CM-JQ) 通用说明书				图号/物料编码 PART NO. 16131000A46805
校 对 CO.BY	吴贻绵					
标准化 STANDARD						材料 MATERIAL 80g双胶纸
业务 seller	应冰冰	图样标记 REL	版本号 REV.NO.	重量(g) WEIGHT	比例 scale	
批 准 AUTHORIZE			0		1:1	美的冰箱事业部 MIDEA REFRIGERATION DIVISION
		共 页 TOTAL SHEETS		第 页 NO. OF SHEETS		

技术要求

1. 尺寸: 145*210mm
2. 印刷颜色: 单色 (灰度印刷)
3. 制件必须符合QMB-J53.005 产品说明书及其它类似印刷件技术规范;
4. 除客户特别要求外均参照美的冰箱最新版相关企业标准执行;

标记 MARKER	变更内容	修改日期	签名

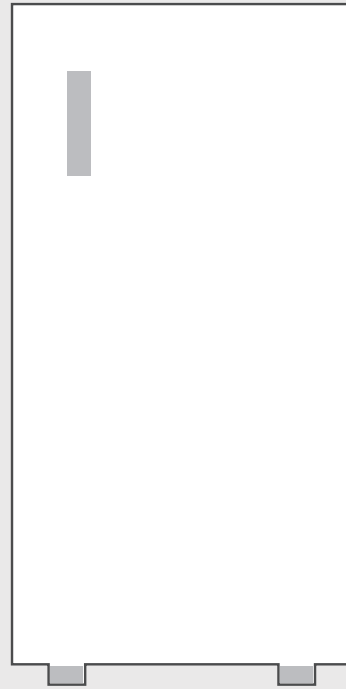

Refrigerator

SINGLE DOOR SERIES

USER MANUAL

MDRD168FGE01

Warning notices: Before using this product, please read this manual carefully and keep it for future reference.
The design and specifications are subject to change without prior notice for product improvement.
Consult with your dealer or manufacturer for details.
The diagram above is just for reference. Please take the appearance of the actual product as the standard.

THANK YOU LETTER

Thank you for choosing Midea! Before using your new Midea product, please read this manual thoroughly to ensure that you know how to operate the features and functions that your new appliance offers in a safe way.

CONTENTS

THANK YOU LETTER ---------- 01

SPECIFICATIONS ---------- 02

PRODUCT OVERVIEW ---------- 03

PRODUCT INSTALLATION ---------- 04

OPERATION INSTRUCTIONS ---------- 08

CLEANING AND MAINTENANCE ---------- 11

TROUBLESHOOTING ---------- 12

APPENDIX ---------- 14

SPECIFICATIONS

Product model	MDRD168FGE01
Rated Voltage / Frequency	220-240V~/50Hz
Rated Current	0.6A
Rated Lamp Power	2W
Fresh Food Storage Compartment Volume	97L
Four-star Compartment Volume	16L
Temperature Rise Time	9h
Freezing Capacity	2kg/24h
Overall Dimension (WxDxH)	553x574x845mm

Importer / Address: MIDEA HOME APPLIANCES UK LTD
5 New Street Square, London, United Kingdom, EC4A 3TW

PRODUCT OVERVIEW

Names of components

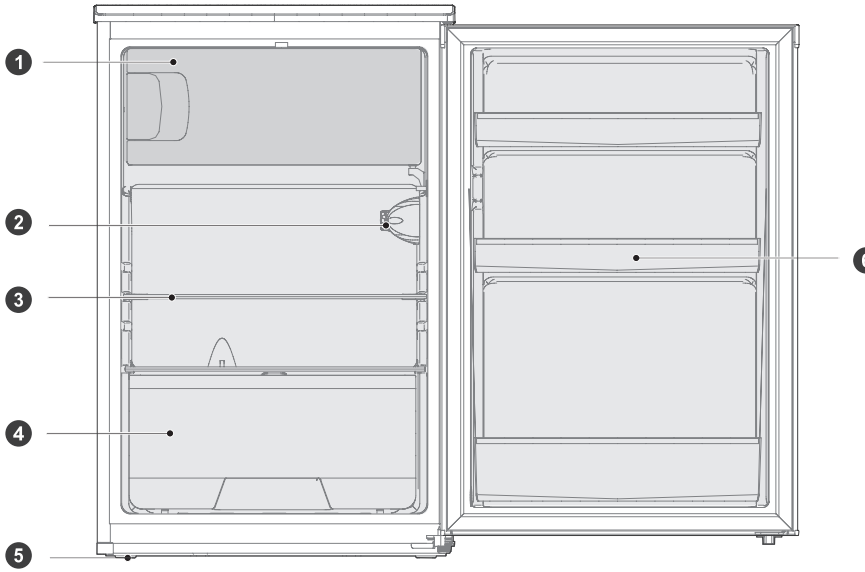

1	Small door	**2**	Temperature control knob
3	Glass shelf	**4**	Fruits and vegetables box
5	Levelling feet	**6**	Bottle box

ATTENTION

The picture above is only for reference. The actual configuration will depend on the physical product or statement by the distributor.

PRODUCT INSTALLATION

Install Instruction

For refrigerating appliances with climate class

- Depending on the climate class, This refrigerating appliance is intended to be used at ambient temperatures range as specified following table.
- The climate class can be found on the rating plate. The product may not operate properly at temperatures outside of the specific range.
- You can find the climate class on the product label.

Effective temperature range

- The product is designed to operate normally in the temperature range specified by its class rating.

Class	Symbol	Ambient temperature range °C	
		IEC 62552 (ISO 15502)	ISO 8561
Extended temperate	SN	+ 10 to + 32	+ 10 to + 32
Temperate	N	+ 16 to + 32	+ 16 to + 32
Subtropical	ST	+ 16 to + 38	+ 18 to + 38
Tropical	T	+ 16 to + 43	+ 18 to + 43

Dimensions and Clearances

- Too small of a distance from adjacent items may result in the degradation of freezing capability and increased electricity costs. Allow over 100 mm of clearance from each adjacent wall when installing the appliance.

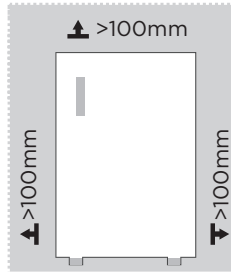

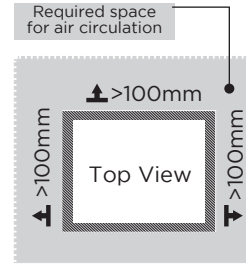

ATTENTION

The picture above is only for reference. The actual configuration will depend on the physical product or statement by the distributor.

Space requirement diagram (when the door is open and when the door is closed)

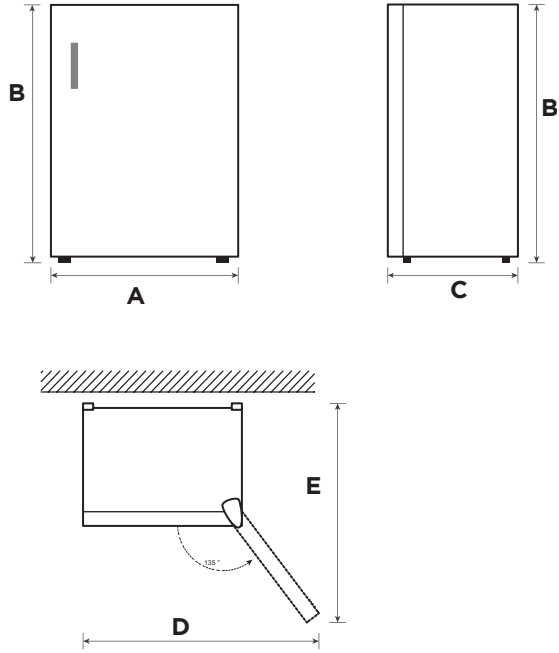

Width	Overall Height	Depth	Width doors open 135°	Depth doors open 135°
A	B	C	D	E
553	845	574	935	960

Notice: All dimensions in mm

Door right-left change

List of tools to be provided by the user	
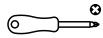	Cross screwdriver
	Putty knife Thin-blade screwdriver
	5/16″ socket spanner
	Masking tape

1. Power off the refrigerator, and remove all objects from the door trays.
2. Dismantle the upper cover,fitting screws of upper hinge, and remove the upper hinge, please keep the door vertical in whole process for avoiding falling down.

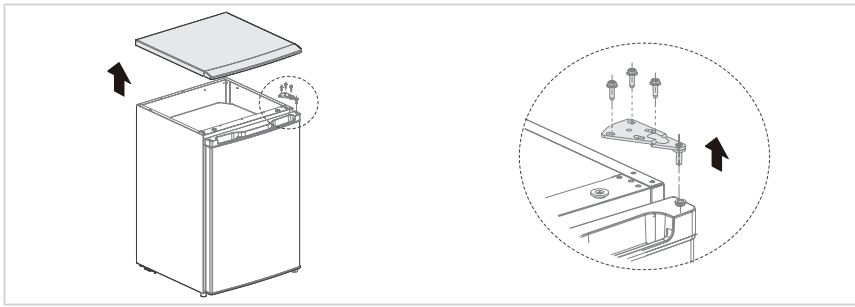

3. Dismantle the door and the bottom hinge assembly and adjustable foot, then assemble the bottom hinge assembly and adjustable foot on other side.

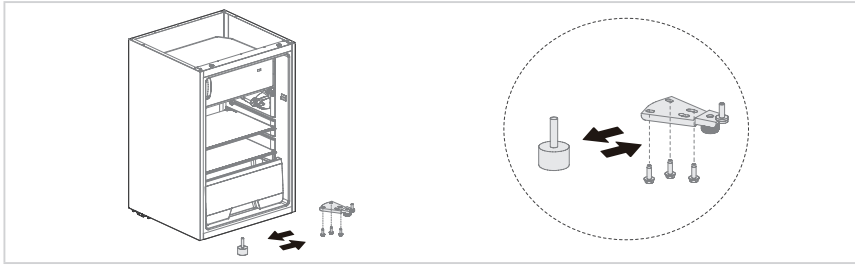

4. Put the door on bottom hinge and assemble the upper hinge, screws, and upper cover.

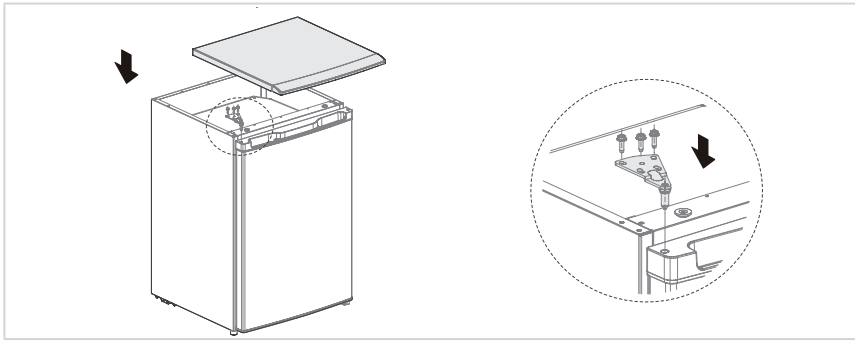

Leveling feet

To avoid vibration, the unit must be leveled.

If required, adjust the leveling screws to compensate for the uneven floor.

The front should be slightly higher than the rear to aid in door closing.

Leveling screws can be turned easily by tipping the cabinet slightly.

Turn the leveling screws counterclockwise to raise the unit, clockwise to lower it.

Connecting the appliance

After installing the appliance, connect the power plug into a socket outlet.

ATTENTION

After connecting the power supply cord (or plug) to the outlet, wait 2 or 3 hours before you put food into the appliance. If you add food before the appliance has cooled completely, your food may spoil.

Tips for energy saving

- Do not place the appliance near cookers, radiators or other heat sources. If the ambient temperature is high, the compressor will run more frequently and for longer, resulting in increased energy consumption.
- Ensure that there is sufficient ventilation at the base of the appliance, on the sides of the appliance and at the back of the appliance. Never cover ventilation openings.
- Please also observe the spacing dimensions in the chapter “Installation”.
- The arrangement of drawers, shelves and racks as shown in the illustration offers the most efficient use of energy and should therefore be retained as far as possible. All drawers and shelves should remain in the appliance to keep the temperature stable and save energy.
- To obtain a larger storage space (e.g. for large refrigerated/frozen goods), the middle drawers can be removed. The top and bottom drawers and shelves should be removed last if necessary.
- An evenly filled refrigerator/freezer compartment contributes to optimal energy use. Therefore, avoid empty or half-empty compartments.
- Allow warm food to cool before placing it in the refrigerator/freezer. Food that has already cooled down increases energy efficiency.
- Allow frozen food to defrost in the refrigerator. The coldness of the frozen food reduces the energy consumption in the refrigerator compartment and thus increases the energy efficiency.
- Open the door only as briefly as necessary to minimise cold loss. Opening the door briefly and closing it properly reduces energy consumption.
- The door seals of your appliance must be perfectly intact so that the doors close properly and energy consumption is not increased unnecessarily.

OPERATION INSTRUCTIONS

Control panal

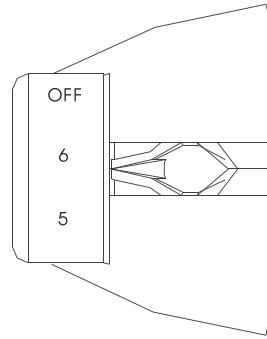

- The figures do not mean specific set temperature, but temperature level.
- “1” means the warmest setting
- “6”means the coldest setting
- The higher the figure is, the lower the actual temperature inside refrigerator shall be.
- “OFF” means stop running.Recommended gear: “3”

ATTENTION

The actual control panel may differ from model to model.

Tips on storing food

Freezer compartment

- The freezer is designated for the storage of food frozen at very low temperature, long-term storage of frozen food, and for the production of ice.
- Only use the shelves in the door of the freezer to store frozen food, not for storing hot food designated for freezing.
- Do not put fresh and frozen food next to each other. The frozen food may thaw.
- When freezing fresh food (such as meat, fish or chopped meat), cut them into parts that can be used at the same time.
- Storing frozen food: instructions are usually stated on the packages, which must be followed. If there is no information on the packaging, food should not be stored for longer than three months from the date of purchase.
- When purchasing frozen food, make sure that it was frozen at a suitable temperature and that the packaging is not damaged.
- Frozen food should be kept in suitable packages to retain the quality and should be returned to the freezer compartment as soon as possible.
- If a package of frozen food shows moisture or abnormal bulging, it is probable that it was stored at the wrong temperature and the content is spoiled.
- The storage period for frozen food depends on the room temperature, the thermostat setting, the frequency of opening the door of the freezer, the type of food and the time of transporting the product from the shop to the household. Always follow the instructions printed on the packaging and never exceed the maximum storage time stated on the package.

Cooling compartment

- To reduce moisture and subsequent ice build-up, never put liquid into the refrigerator in unsealed containers. Frost tends to concentrate in the coolest parts of the evaporator. Storing uncovered liquids results in a more frequent need for defrosting.
- Never put warm foods in the refrigerator. These should first cool down at room temperature and then be placed so as to ensure adequate air circulation in the refrigerator.
- Foods or food containers should not touch the back wall of the refrigerator because they could freeze to the wall. Do not keep regularly opening the door of the refrigerator.
- Meat and clean fish (packed in a package or plastic foil) can be placed in the refrigerator, which can be used in 1–2 days.
- Fruit and vegetables without packaging can be placed in the part designated for fresh fruit and vegetables.

ATTENTION

The optimal temperature setting of each compartment depends on the ambient temperature. Above optimal temperature is based on the ambient temperature of 25 °C.

Order	Compartments TYPE	Target storage temp. [°C]	Appropriate food
1	Fridge	+2 ≤ +8	Eggs, cooked food, packaged food, fruits and vegetables, dairy products, cakes, drinks and other foods are not suitable for freezing.
2	(***)*-Freezer	≤-18	Seafood (fish, shrimp, shellfish), freshwater aquatic products and meat products (recommended for 3 months, the longer the storage time, the worse the taste and nutrition), suitable for frozen fresh food.
3	***-Freezer	≤-18	Seafood (fish, shrimp, shellfish), freshwater aquatic products and meat products (recommended for 3 months, the longer the storage time, the worse the taste and nutrition), suitable for frozen fresh food.
4	**-Freezer	≤-12	Seafood (fish, shrimp, shellfish), freshwater aquatic products and meat products (recommended for 3 months, the longer the storage time, the worse the taste and nutrition), suitable for frozen fresh food.
5	*-Freezer	≤-6	Seafood (fish, shrimp, shellfish), freshwater aquatic products and meat products (recommended for 3 months, the longer the storage time, the worse the taste and nutrition), suitable for frozen fresh food.
6	0-star	-6 ≤ 0	Fresh pork, beef, fish, chicken, some packaged processed foods, etc. (Recommended to eat within the same day, preferably no more than 3 days). Partially encapsulated processed foods (non-freezable foods).
7	Chill	-2 ≤ +3	Fresh/ frozen pork, beef, chicken, freshwater aquatic products, etc. (7 days below 0°C and above 0°C is recommended for consumption within that day, preferably no more than 2 days).Seafood (less than 0 for 15 days, it is not recommended to store above 0°C.
8	Fresh food	0 ≤ +4	Fresh pork, beef, fish, chicken, cooked food, etc.(Recommended to eat within the same day, preferably no more than 3 days)
9	Wine	+5 ≤+20	Red wine, white wine, sparkling wine, etc.

ATTENTION

please store different foods according to the compartments or target storage temperature of your purchased.

CLEANING AND MAINTENANCE

Defrost

- Power off the refrigerator.
- Remove the food from the refrigerator and place it properly to prevent food from melting.
- Clear the drain pipe (to use soft materials to prevent damage to the liner), Prepare the water containers for defrosting. (pay attention to clean the compressor compartment water draining tray, Ovoding overflow to the ground).
- You can also use the appropriate amount of hot water to speed up the defrost, with a dry towel to dry the water after defrosting.
- You can also use the appropriate amount of hot water to speed up the defrost, with a dry towel to dry the water after defrosting.
- After defrosting, put back the foods in cabinet, and power on the refrigerator.

Stop using

Power failure:

In case of power failure, even if it is in summer, foods inside the appliance can be kept for several hours; during the power failure, the times of door opening shall be reduced, and no more fresh food shall be put into the appliance.

Long-time nonuse:

The appliance shall be unplugged and then cleaned; then the doors are left open to prevent odor.

Moving:

Before the refrigerator is moved, take all objects inside out, fix the glass partitions, vegetable holder, freezing chamber drawers and etc. with tape, and tighten the leveling feet; close the doors and seal them with tape. During moving, the appliance shall not be laid upside down or horizontally, or be vibrated; the inclination during movement shall be no more than 45°.

The appliance shall run continuously once it is started. Generally, the operation of the appliance shall not be nterrupted; otherwise the service life may be impaired.
Foods can be preserved for a couple of hours even in summer in case of power failure; it is recommended to reduce the frequency of opening door.

TROUBLESHOOTING

The following simple issues can be handled by the user. Please call the after-sale service department if the issues are not solved.

Problem	Possible reason
Failed operation	• Check whether the appliance is connected to power or whether the plug is in well contact
	• Check whether the voltage is too low
	• Check whether there is a power failure or partial circuits have tripped
Odor	• Odorous foods shall be tightly wrapped
	• Check whether there is any rotten food
	• Clean the inside of the refrigerator
Long-time operation of the compressor	• Long operation of the refrigerator is normal in summer
	• when the ambient temperature is high It is not suggestible having too much food in the appliance at the same time
	• Food shall get cool before being put into the appliance
	• The doors are opened too frequently
Light fails to get lit	• Check whether the refrigerator is connected to power supply and whether the illuminating light is damaged
	• Have the light replaced by a specialist
Door can not be properly closed	• The door is stuck by food packages Too much food is placed
	• The refrigerator is tiltedr
Loud noises	• Check whether the floor is level and whether the refrigerator is placed stably
	• Check whether accessories are placed at proper locations

Problem	Possible reason
Door seal fails to be tight	• Remove foreign matters on the door seal
	• Heat the door seal and then cool it for restoration (or blow it with an electrical drier or use a hot towel for heating)
Water pan overflows	• There is too much food in the chamber or food stored contains too much water,resulting in heavy defrosting
	• The doors are not closed properly, resulting in frosting due to entry of air and increased water due to defrosting
Hot housing	• Heat dissipation of the built-in condenser via the housing, which is normal When housing becomes hot due to high ambient temperature, storage of too much food or shutdown of the compressor is shut down, provide sound ventilation to facilitate heat dissipation
Surface condensation	• Condensation on the exterior surface and door seals of the refrigerator is normal when the ambient humidity is too high. Just wipe the condensate with a clean towel
Abnormal noise	• Buzz: The compressor may produce buzzes during operation, and the buzzes are loud particularly upon start or stop. This is normal
	• Creak: Refrigerant flowing inside of the appliance may produce creak, which is normal

APPENDIX

Special for new European standard

The ordered parts in the following table can be acquired from Service provider channel

Ordered part	Provided by	Minimum time required for Provision
Thermostats	Professional maintenance personnel	At least 7 years after the last model is launched on the market
Temperature sensors	Professional maintenance personnel	At least 7 years after the last model is launched on the market
Printed circuit boards	Professional maintenance personnel	At least 7 years after the last model is launched on the market
Light sources	Professional maintenance personnel	At least 7 years after the last model is launched on the market
Door handles	Professional repairers and final users	At least 7 years after the last model is launched on the market
Door hinges	Professional repairers and final users	At least 7 years after the last model is launched on the market
Trays	Professional repairers and final users	At least 7 years after the last model is launched on the market
Baskets	Professional repairers and final users	At least 7 years after the last model is launched on the market
Door gaskets	Professional repairers and final users	At least 10 years after the last model is launched on the market

Dear customer

1. If you want to return or replace the product, please contact the store where you buy.

(Remember to bring the purchase invoice)

2. If your product breaks down which needs to repair, please contact after-sales service provider.

ATTENTION

The model information inthe product database, as well as the model identifier, can be obtained througha weblink scanned by a QR code, if any, on the energy efficiency label of the product.
For more information about the energy efficiency of the appliance, visit https://ec.europa.eu and search using the model name.
The model name can be found on the rating label of the appliance.

Midea

make yourself at home

www.midea.com

© Midea 2022 all rights reserved