PLASMA FREEZERS and BLOOD BANK REFRIGERATORS Installation, Operation and Maintenance Instructions

INSPECTION

When the equipment is received, all items should be carefully checked against the bill of lading to insure all crates and cartons have been received. All units should be inspected for concealed damage by uncrating the units immediately. If any damage is found, it should be reported to the carrier at once, and a claim should be filed with the carrier. This equipment has been inspected and tested in the manufacturing facility and has been crated in accordance with transportation rules and guidelines. Manufacturer is not responsible for freight loss or damage.

INSTALLATION

GENERAL

Insure that the cabinet crate is on a smooth level surface. While supporting the cabinet cut the banding straps that secure the cabinet to the crate base. Check and confirm that the casters/legs are screwed completely and tightly into the cabinet base. Be aware that the cabinet is top heavy and carefully remove the cabinet from the crate base.

If the condensing unit compressor is semi-hermetic, it is secured for shipping on the 1 door and 2 door models**. Remove the spring clips and loosen the mounting bolts prior to operation.** See the label attached to the condensing unit. If the condensing unit compressor is hermetically sealed, no spring clips or mounting bolts are present.

If for some reason the doors are not squared up on the cabinet, the doors can be adjusted. Opening the door(s) and loosening the screws that hold both the top and bottom hinges to the cabinet can accomplish this. After adjusting the door so that it is aligned correctly, tighten the screws to securely hold the hinges in place.

VAPORIZER INSTALLATION

The Plasma Freezers require the installation of the condensate vaporizer, which is shipped inside the unit compartment. The vaporizer should be mounted to the cabinet bottom. See View 1. In lieu of the vaporizer, these units can be plumbed to a floor drain following local plumbing codes.

Note: Disconnect power prior to installation.

1. Connect the power cord to the vaporizer and place it in the vaporizer bracket.

2. Attach the vaporizer to the unit using the four screws as shown. Make sure the plastic drain tube is in the vaporizer pan.

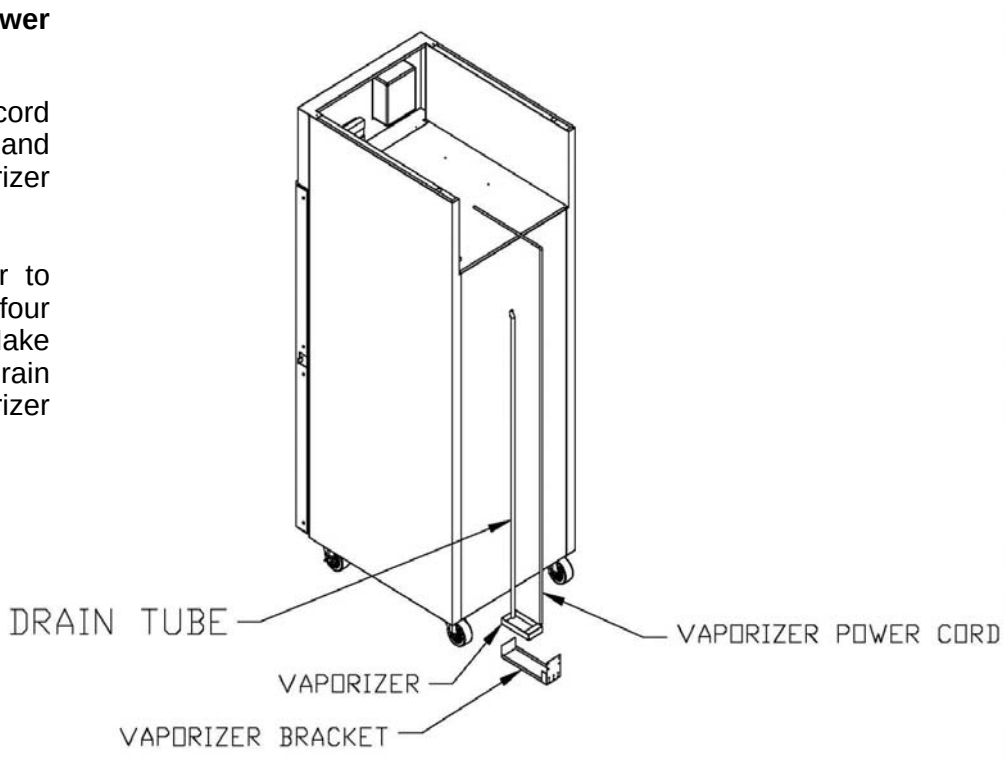

View 1

LOCATION

The refrigeration system located at the top of the cabinet requires free air access for proper operation. Allow a minimum four-inch clearance on the top, rear, and sides of the cabinet. The cabinet should also be leveled when it is placed in its permanent location.

ELECTRICAL

Check the proposed outlet to be used to insure that the voltage, phase, and current carrying capacity of the circuit from the electrical panel correspond to the requirements of the cabinet. NEVER use an extension cord to wire any unit. On permanently connected units, those not furnished with a plug-in service cord, all inter-wiring between the electrical panel and the unit must be done in accordance with the National Electric Code and all state and local codes. See serial tag for electrical data.

2-10VDC temperature retransmit is standard on some models, optional on others. See the following pages for details and also see the controller programming manual for configuration details. An optional 4-20mA temperature retransmit is also available.

Observe all Warning Labels. Disconnect power supply to eliminate injury from electrical shock or moving parts when servicing equipment.

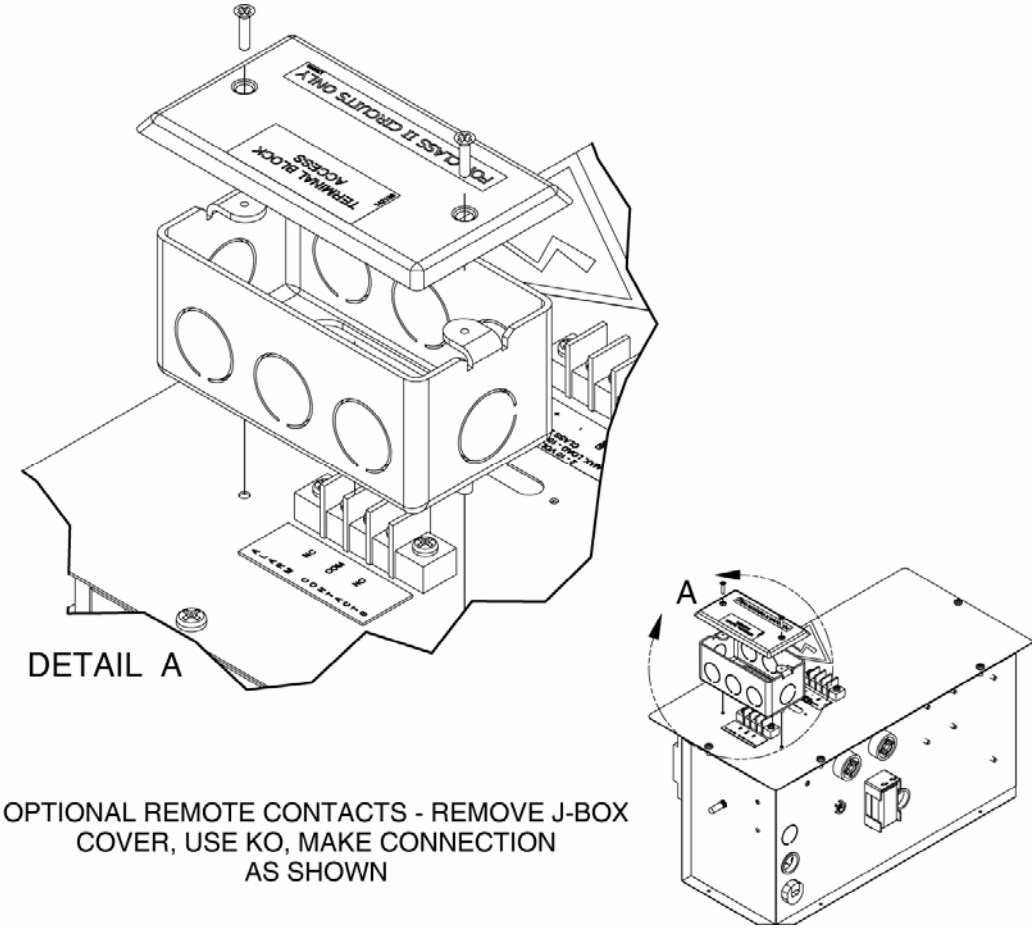

OPTIONAL REMOTE CONTACTS - REMOVE J-BOX COVER, USE KO, MAKE CONNECTION AS SHOWN

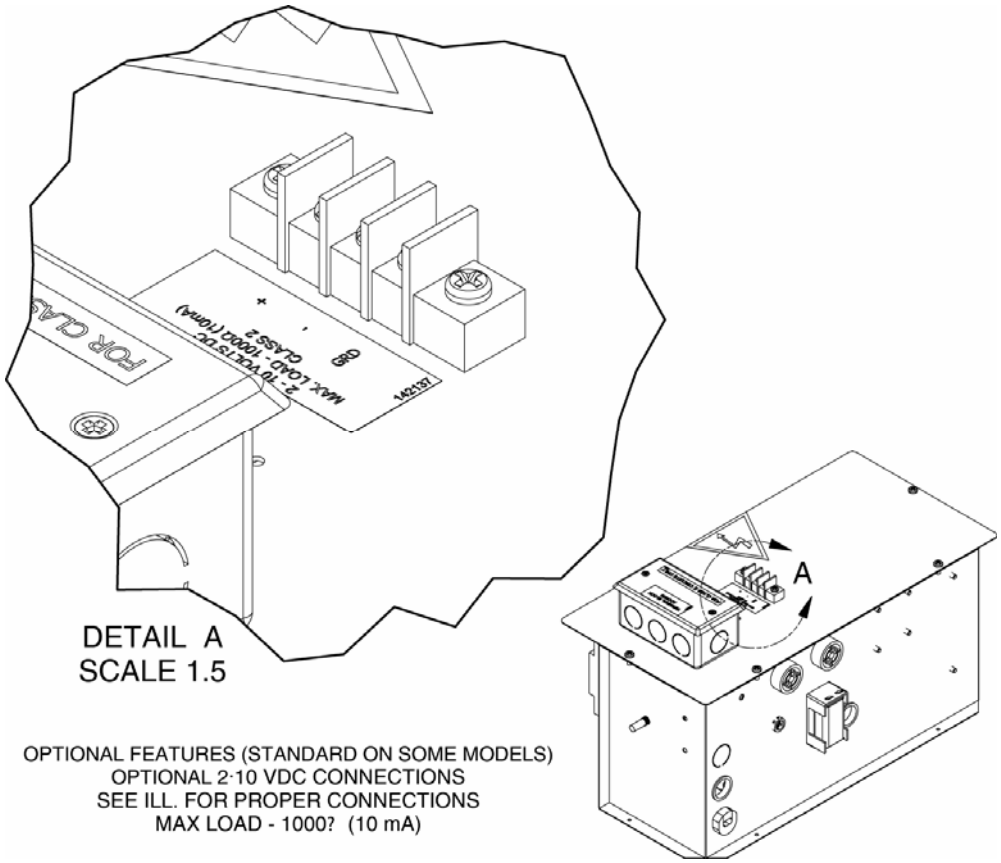

OPTIONAL FEATURES (STANDARD ON SOME MODELS)
OPTIONAL 2-10 VDC CONNECTIONS
SEE ILL. FOR PROPER CONNECTIONS
MAX LOAD - 1000? (10 mA)

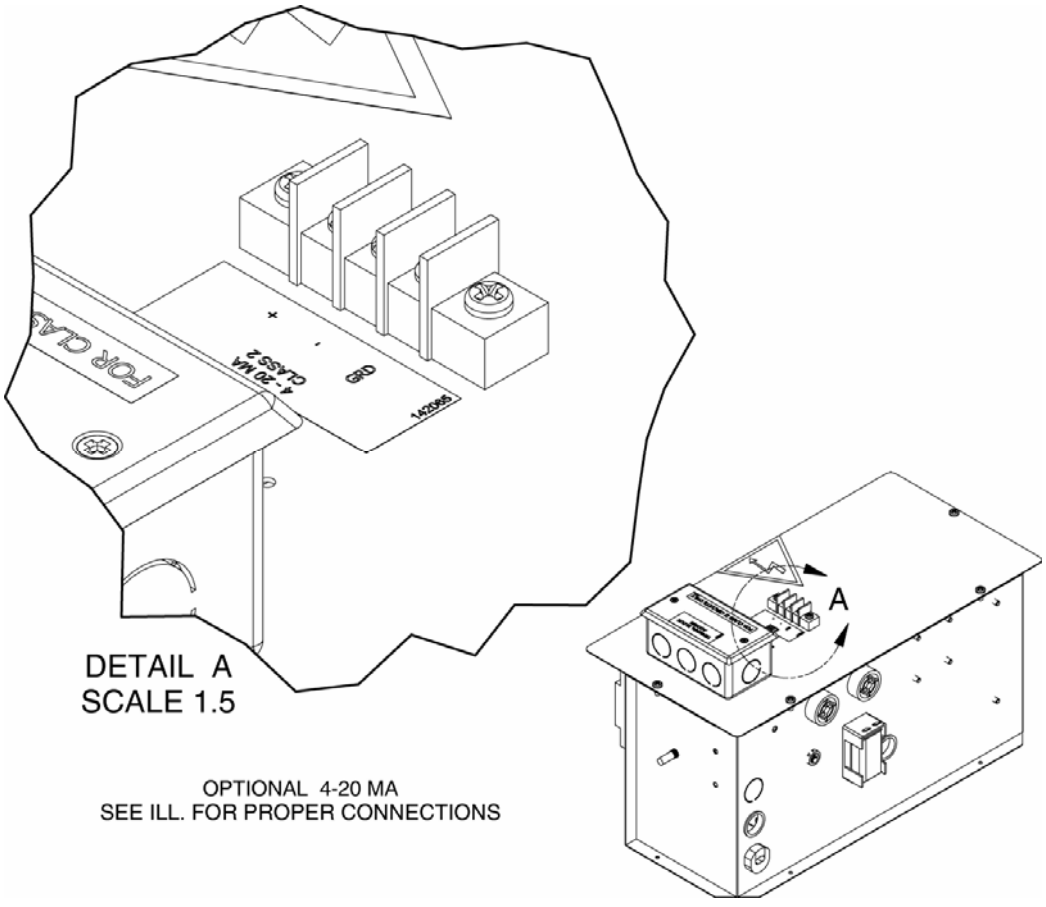

OPTIONAL 4-20 MA
SEE ILL. FOR PROPER CONNECTIONS

OPERATION

The plasma freezers and blood bank refrigerators employ a unit cooler evaporator located inside the cabinet as the heat-removing source. Through the refrigeration process, heat is captured in the evaporator, transferred to the condensing unit on top of the cabinet, and expelled to the surrounding outside air. It is extremely important to allow a four-inch clearance on the top, rear, and sides of the unit for the refrigeration process to function properly.

These refrigerators and freezers utilize a programmable controller to control the temperature and defrost settings. The controller, which is located on the facade of the unit, is factory set. Please see the separate default settings sheet and instructions on the operation of the controller used in the Plasma Freezers. See the separate instructions on the operation of the controller used in the Blood Bank Refrigerators.

Note: These cabinets are equipped with two switches located on the façade. One is the main power ON/OFF switch for the unit. The other is a three-position switch for the battery-powered alarm. The alarm switch is placed in the middle, or OFF position, for shipment. When the cabinet is put into operation, the top of the switch should be pushed in to the ON position. With the switch in the ON position, the battery will sound the alarm if the main power to the cabinet is interrupted. The switch flipped to the bottom position is used to test the battery. This test must be done with power uninterrupted to the cabinet. The alarm will sound if the battery is good. This test should be done periodically. The battery is located inside the control box that is on top of the unit behind the façade. **CAUTION: Disconnect the power to the cabinet when going into the control box to replace the battery.**

REFRIGERATORS

During the operation of a refrigerator, frost will periodically form on the coil surface. Each time the compressor cycles "off", the evaporator fans will continue to run, which will keep the internal temperature uniform and at the same time remove any frost build up on the coil. The water produced will collect in the unit cooler drain pan and travel down the drain tube to the condensate vaporizer.

FREEZERS

After shutting the door on freezer models, a short amount of time must be allowed before the door can be reopened. This is due to the tight seal maintained between the door and the cabinet. Waiting a few moments for the pressure to equalize permits the door to be opened easily.

A positive defrost is required to remove frost from the coil in freezer models. This is accomplished by energizing heaters during the defrost cycle that are positioned on the coil surface. The programmable controller is factory set to allow four defrosts per day.

As the preset defrost time is reached, the controller automatically terminates the refrigeration process by turning off the condensing unit and unit cooler fan motors, and energizes the defrost heaters. As the coil temperature increases, the frost begins to melt producing water that runs down the coil to the unit cooler drain pan and exits through the drain tube to the vaporizer. After all the frost has been removed and the coil temperature reaches approximately 10˚C, defrost is terminated through the action of the defrost termination control located on the unit cooler, and the refrigeration process resumes. In order to insure that any excess water remaining on the coil is not sprayed into the cabinet interior, and all heat generated by the defrost is removed**, the unit cooler fans will not operate until the coil temperature reaches approximately -10˚C.**

GLYCERIN WELL ASSEMBLY

Important: For accurate product temperature reading, the product-sensing bulb must be immersed in glycerin solution contained in the provided well.

One or two glycerin wells, along with a six-ounce container, or containers, of glycerin are furnished with each model. The purpose of the glycerin is to simulate the product stored in the refrigerator or freezer. The glycerin temperature reflects the product's temperature during normal operation.

After the unit is put into operation, remove the stopper at the top of the glycerin well. Check to make sure that the temperature indicating or alarm sensing bulb is positioned inside and at the bottom of the glycerin well. Add the six ounces of glycerin that has been provided into the glycerin well. Reinstall the stopper to the top of the glycerin well.

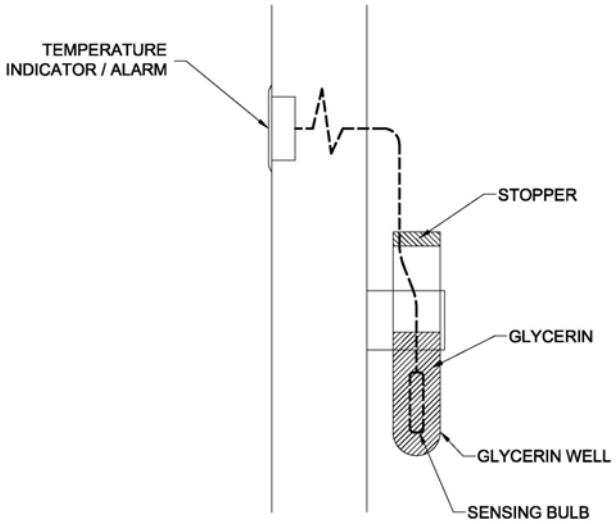

MAINTENANCE

PERIODIC CLEANING

Beginning with the initial installation, the interior surfaces of the cabinet should be periodically wiped down with a solution of warm water and baking soda. This solution will remove any odors from spillage that has occurred. The exterior of the cabinet should also be cleaned frequently with a commercial grade of glass cleaner. **Caution: Do not use an abrasive or alkaline solution.**

Monthly cleaning of the condenser will aid the heat transfer characteristics of the refrigeration system and increase its efficiency. Dust, dirt, and lint will tend to accumulate on the fins of the condensing unit. This obstruction will affect the flow of air through the condenser, thereby lowering the efficiency of the system. A stiff bristled brush can be used to loosen these particles that are attached to the fins so that they may be removed with a vacuum cleaner. Do not use a wire brush for cleaning the condenser. **Important: Failure to keep the condenser coil clean and clear of obstructions could result in temperature loss and damage to the compressor. Do not use a wire brush to clean the condenser.**

All moving parts have been permanently lubricated and will generally require no maintenance.

DRAWER REMOVAL

The blood storage cabinet comes equipped with eight stainless steel drawers per cabinet door opening. To remove for cleaning, move the drawer forward; locate the black release tabs found on each drawer slide rail. See illustration. Move the release tabs on each side to the release position and slide the drawer towards you and remove.

To install a drawer, guide the drawer inner and outer slide rail assembles together and push the drawer to the back of the cabinet until the black release tab is latched and locked.

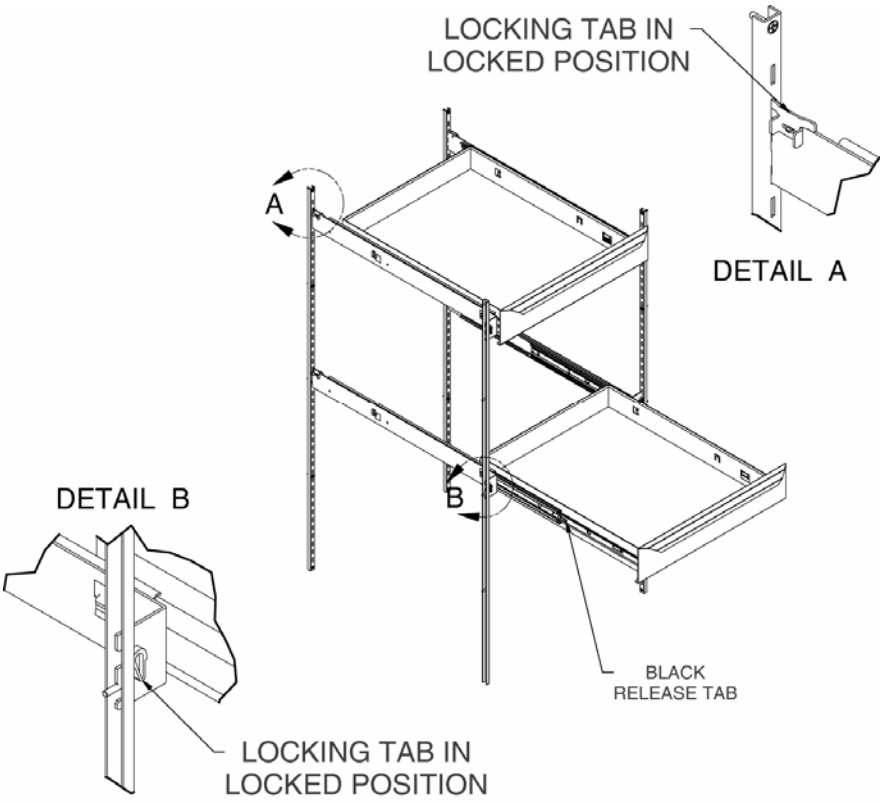

DRAWER SLIDE REMOVAL/ADJUSTMENT

Each drawer slide is independently removable and can be adjusted to different levels. First remove the drawer per above instructions. Release the locking tabs located on the drawer slide, move the front tab up and release the tab in the back of the cabinet, by sliding the locking tab towards the front. See illustration. Unhook the drawer slide assembly from both the front and back shelf standards by lifting up on the assembly.

To install a drawer slide, reverse the process used to remove the slide. Secure the locking tabs into position after the drawer slide assembly is in place. Reinstall the drawer.

MAINTENANCE SERVICE AND ANALYSIS GUIDE
REFRIGERATION SYSTEMS - ALL MODELS

MALFUNCTION	POSSIBLE CAUSE	SOLUTION
Compressor will not start - no hum	1. Service cord unplugged 2. Fuse blown or removed 3. Overload tripped 4. Control stuck open 5. Wiring incorrect	1. Plug in service cord 2. Replace fuse 3. Determine reasons and correct 4. Repair or replace 5. Check wiring against the diagram
Compressor will not start - hums but trips on overload protector	1. Improperly wired 2. Low voltage to unit 3. Starting capacitor defective 4. Relay failing to close	1. Check wiring against the diagram 2. Determine reason and correct 3. Determine reason and replace 4. Determine reason, correct or replace
Compressor starts and runs, but short cycles on overload protector	1. Low voltage to unit 2. Overload defective 3. Excessive head pressure 4. Compressor hot-return gas hot	1. Determine reason and correct 2. Check current, replace overload protector 3. Check ventilation or restriction in refrigeration system 4. Check refrigerant charge, fix leak if necessary
Compressor operates long or continuously	1. Short of refrigerant 2. Control contact stuck 3. Evaporator coil iced 4. Restriction in refrigeration system 5. Dirty condenser	1. Fix leak, add refrigerant 2. Repair or replace 3. Determine cause, defrost manually 4. Determine location and remove restriction 5. Clean condenser
Compressor runs fine, but short cycles	1. Overload protector 2. Cold control 3. Overcharge 4. Air in system 5. Undercharge	1. Check wiring diagram 2. Differential too close - widen 3. Reduce charge 4. Purge and recharge 5. Fix leak, add refrigerant
Starting capacitor open, shorted or blown	1. Relay contacts stuck 2. Low voltage to unit 3. Improper relay	1. Clean contacts or replace relay 2. Determine reason and correct 3. Replace
Relay defective or burned out	1. Incorrect relay 2. Voltage too high or too low	1. Check and replace 2. Determine reason and correct
Refrigerated space too warm	1. Control setting too high 2. Refrigerant overcharge 3. Dirty condenser 4. Evaporator coil iced 5. Not operating 6. Air flow to condenser or evaporator blocked	1. Reset control 2. Purge refrigerant 3. Clean condenser 4. Determine reason and defrost 5. Determine reason, replace if necessary 6. Remove obstruction for free airflow
Standard temperature system freezes the product	1. Control setting is too low 2. Control points stuck	1. Reset the control 2. Replace the control
Objectionable noise	1. Fan blade hitting fan shroud 2. Tubing rattles 3. Vibrating fan blade 4. Condenser fan motor rattles 5. General vibration 6. Worn fan motor bearings	1. Reform or cut away small section of shroud 2. Locate and reform 3. Replace fan blade 4. Check motor bracket mounting, tighten 5. Compressor suspension bolts not loosened on applicable models - loosen them 6. Replace fan motor
Pan Area	1. No cooling 2. Too cold 3. Too warm	1. Make sure switch is in the "on" position 2. Adjust temperature control - see instructions under pan area 3. Adjust temperature control - see instructions under pan area