DAEWOO ELECTRONICS



Operating Instructions

REFRIGERATOR / FREEZER COMBINATION

FR-650N..
FR-651N..
FN-650N..
FN-651N..

Download from Www.Somanuals.com. All Manuals Search And Download.

Disposal of Used Electrical & Electronic Equipment



The meaning of the symbol on the product, its accessory or packaging indicates that this product shall not be treated as household waste. Please, dispose of this equipment at your applicable collection point for the recycling of electrical & electronic equipments waste. In the European Union and Other European countries there are separate collection systems for used electrical and electronic product. By ensuring the correct disposal of this product, you will help prevent potential hazards to the environment and to human health, which could otherwise be caused by unsuitable waste handling of this product. The recycling of materials will help conserve natural resources.
Please do not therefore dispose of your old electrical and electronic equipment with your household waste. For more detailed information about recycling of this product, please contact your local city office, your household waste disposal service or the shop where you purchased the product.

SAFETY WARNING
(R-600a models only)



This appliance contains a certain amount of isobutane refrigerant (R600a) a natural gas with high environmental compatibility that is, however, also combustible.
When transporting and installing the appliance, care should be taken to ensure that no parts of the refrigerating circuit are damaged.
Refrigerant squirting out of the pipes could ignite or cause eye injury. If a leak is detected, avoid any naked flames or potential sources of ignition and air the room in which appliance is standing for several minutes.

- In order to avoid the creation of a flammable gas-air mixture if a leak in the refrigerating circuit occurs, the size of the room in which the appliance may be sited depends on the amount of refrigerant used.
  The room must be 1 m³ in size for every 8g of R600a refrigrant inside the appliance. The amount of refrigerant is shown on the identification plate inside the appliance.
- Never start up an appliance showing any signs of damage. If in doubt, consult your dealer.

RoHS (Directive 2002/95/EC) Compliant



This product is environmentally sound and sustainable free from Pb, Cd, Cr+6, Hg, PBBs and PBDEs restricted in accordance with the Directive.

Refrigerant Information (R-134a Models Only)

Refrigerant	R-134a
Charge	0.105kg
Global Warming Potential	1300
Contains fluorinated greenhouse gases covered by the Kyoto Protocol and is hermetically sealed. Foam blown with fluorinated greenhouse gases.	
Blowing Agent	C-pentane

OBSERVE AMBIENT TEMPERATURE

This refrigerator is designed to operate in ambient temperature specified by its category, which is marked on the rating plate.

Climate Category	Ambient temperature from... to
SN	+10°C to +32°C
N	+16°C to +32°C
ST	+16°C to +38°C
T	+16°C to +43°C

NOTE
Internal temperature may be affected by such factors as the location of the refrigerator, ambient temperature and frequency of the door opening.

Contents

Installation Instructions, 3
Suitable Installation Place
Grounding
Correct usage of Refrigerator
Height Adjustable Feet Installation
Front Cover Installation

Safety Instructions, 4-6

Trobleshooting Guide, 7

Interior Features / Temperature Controls, 8-10

Care & Cleaning, 11

Helpful Hints, 12

Handle installation, 12

Download from Www.Somanuals.com. All Manuals Search And Download.

Installation Instructions

Suitable Installation Place

Where the floor is solid and level
- Unstable installation causes vibration and noise of refrigerator.
- Wooden floor or carpet can be discolored under the refrigerator.
- Doors look hanged down due to the twist of refrigerator unless it is leveled.

Where ventilation is good
- More than 5 cm from 3 sides (left, right and back) is good enough for ventilation.
- Insufficient space causes the noise of vibration, weakening of refrigerating power and the waste of electricity.

Where there is little or no heat, moisture
- Direct sun rays, side heat of stove and gas range can weaken the refrigerating power.
- Avoid location by a sink or where moisture and water can cause rust and corrosion.
- Avoid location where moisture can cause electrical problems.
- Use hard board or plank on the concrete/cement floor.

Grounding

Grounding terminal is the green one connected to the power cord in the back of refrigerator.

Grounding is necessary where
water can splash easily ;
there is much moisture basement etc.;
any wet and/or watery places.

Grounding by using grounding wire
Bury copper plate to whitch grounding wire is connected 25 cm deep in the ground.

Grounding by using short-circuit breaker
Short-circuit breaker is a must where the floor is always wet, for example, fish shop, restaurant kitchen etc.

Grounding is not necessary
in case of using side-grounded outlet.

You should not connect the ground wire to
water pipe, gas pipe, telephone line, lightening-rod.
There can be an explosion or fire.

Correct usage of Refrigerator

Plug in the refrigerator right after installation.

Set the both compartments' temperature to "MAX" to perform preparatory run for 2 or 3 hours.
When the inside is cold enough, put the foods in.
*When the surrounding temperature is hot in midsummer, do not open and shut the doors too often after installation.

Height Adjustable Feet Installation

Open the fresh food compartment door and lift up a little. Attach the height adjustable foot to their holes in the left and right bottom of refrigerator. Adjust the height by turnning the legs until it touches the floor.
- Let the right adjustable feet touch the floor firmly, while the left, smoothly.

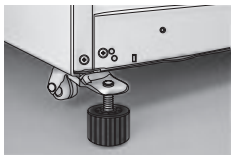

Front Cover Installation

Please remove the screws on the front bottom panel first.
- After installation and/or door leveling, click the front cover and fasten it with screws.

Download from Www.Somanuals.com. All Manuals Search And Download.

Safety Instructions

⚠ WARNING
Improper use can cause physical damage - personal injury.

⚠ CAUTION
Improper use can cause injury or material damage to the household.


BE SURE TO KEEP


PROHIBITION


DO NOT DISASSEMBLE


DO NOT TOUCH


UNPLUG


GROUND

If the power cord of refrigerator is damaged, have it replaced at a repair shop or the manufacturer, as special tools are required. Allow 5 cm or more clearance over wall, side and rear plate of the refrigerator for good air circulation.

⚠ WARNING

VENTILATION
In case of gas leakage, ventilate the room instead of unplugging the refrigerator.
• Explosion or fire may occur.



ATTENTION
Do not eat any frozen food immediately from the freezer compartment.
• It can get you cold-burns.



CLEAN PLUG
Unplug and clean it with dry cloth if dirty.
• Dusty and dirty plug may cause fire.



NO
Never install the refrigerator where there is much moisture or where water can splash.
• It can be a danger of short circuit or fire.



EXCLUSIVE POWER OUTLET
Use exclusive power outlet for the refrigerator only.
• Several plugs in an outlet may cause fire. Do not use a double outlet or extension cord.



DISCARDING
When discarding the refrigerator, remove the door packing.
• Children may be trapped inside of it.



NO
Do not put heavy things or water containing tanks on top of refrigerator.
• It's dangerous when they fall down and fire by short circuit can happen.



⚠ WARNING

NO
Never install the refrigerator where there is much moisture and water can splash.
• There can be a danger of short circuit or fire.



NEVER USE
When you smell something strange burning out of refrigerator, unplug it to stop running.
• It's very dangerous to keep the abnormal refrigerator incessantly running.



NEVER USE
Never use any spray near the refrigerator.
• It can cause danger of explosion.



NEVER STORE
This refrigerator is for storing only foods.
• Do not store medicines, flammable things, and study sample, etc.



NEVER TOUCH
Do not use any sharp tools when cleaning the inside.
• The cooling system can be damaged or there may be electric shock.



NO
Do not allow children to hang on the doors.
• The refrigerator may be tipped over to hurt children.



NEVER USE
Never use plug if it is loose.
• There can be electric shock or fire by short circuit.



NEVER EAT
Never eat deteriorated food stored too long in the refrigerator or in the out-of-order refrigerator.
• You can be food-poisoned.



Download from Www.Somanuals.com. All Manuals Search And Download.

NEVER DISASSEMBLE
Do not repair the refrigerator on your own.
- It can work abnormally and cause a bigger trouble.



NEVER TOUCH
Do not pull and/or push the plug with wet hand.
- There can be danger of electric shock.



WARNING

UNPLUG
Unplug first when exchanging the bulb and/or cleaning the refrigerator.



UNPLUG
Grip the whole plug body when you unplug.
- Holding only the wire can cause electric spark or short circuit.



UNPLUG
When not using refrigerator for a long time, unplug and take all the foods out.
- In case of power failure, foods may decay and other accident (short circuit, fire etc.) can happen.



GROUNDING
Be sure to ground.
- There is a danger of electric shock due to short circuit or mal-function.



WARNING

MOVING/ CARRYING
When you move the refrigerator, take all the foods out and empty the ice box and evaporation dish of water.
- Foods may be damaged and you can slip on watery floor.



HEIGHT ADJUSTING FEET
When turning up the feet, lift the set a little.
- It is hard to turn them up unless the set is lifted.



MOVING / CARRYING
Lift the refrigerator up enough not to scratch a soft floor.
- Front and rear wheels under the refrigerator may scratch the floor.



INSTALLATION
Place on a solid and level floor.
- Unstable installation causes distortion of cabinet and doors.



HEIGHT ADJUSTING FEET
When moving and carrying the set, turn the feet up.
- If the feet touch the floor, they can be broken or the floor may be scratched.



WARNING

DOOR HANDLES
Opening and shutting doors, hold door handles, not other parts.
- Your fingers may be jammed in between.



HAND OVER
Handing over this refrigerator, you'd better give user's guide together to him/her.
- New user may not know well how to use this refrigerator.



ATTENTION
Foods should not protrude from shelves.
- They can fall down and/or be broken when opening the door.



DO NOT TOUCH
Do not touch cold surfaces of foods or food containers in the freezer compartment directly.
- They are in the state of like frozen metal, so skin can adhere to these cold surfaces. (Especially when your hands are wet and damp.)



FOOD STORAGE
When you store foods in the pockets, push in deep down the pocket bottom.
- Tall bottles may fall down or the pockets can be broken.



Download from Www.Somanuals.com. All Manuals Search And Download.

CAUTION

If there is water or oil on the floor around refrigerator, wipe it out.

• There is danger of slipping over to be hurt.



FORBIDDEN

Do not store bottles, cans or canned food in the freezer compartment.

• They can be broken or exploded by expansion of freezing.



DO NOT TOUCH

Do not reach out your hands or legs under the refrigerator (when cleaning under the refrigerator.

• You can be hurt by rough edges and parts under the refrigerator.



Download from Www.Somanuals.com. All Manuals Search And Download.

Troubleshooting Guide

• Before calling for service, check the followings.

Foods freeze in the fresh food compartment
• Has the temperature been on “MAX” continuously?
• Is the temperature near refrigerator less than 5°C?
• Was moist foods such as vegetables placed just in front of the cold air duct?

Refrigerator never get cold.
Is there no power failure?
Is the mains play firmly secure.

Refrigerator does not get cold enough.
• Has the temperature been on “MIN” continuously? Set the temperature to “NORMAL”.
• Has too hot food put in? Check food storage state.
• Is the inside filled with too much food?
• Is either door open or did you open and shut the doors too often?
• Is there a gas range or a stove near the refrigerator?
Is it in direct sun-light? Check the installation place.

Refrigerator is noisy.
• Is the floor firm and level or the refrigerator levelled well ?
• Is the back of refrigerator touching the wall ?

Moisture collects inside.
• Check if either door is open.
• Did you leave the doors open too long or is moist food put with its lid off ? Moisture disappears naturally if doors are closed, but it’s better to wipe it off with dry cloth.

Water is flowing out when moving the refrigerator.
• Have you dried and emptied the evaporator dish?

Something smells.
• Air ducts blocked with foods ?
• Is strong odoring food stored unwrapped ? Check the food storage state.
*The vegetable cases are closed, so deodorazing is almost impossible.

Refrigerator Is Not Wrong or Out of Order In These Cases...

Moisture is forming on cabinet surface !
• Moisture can be formed during the rainy season or through continuous hot and humid days. Wipe out the surface with dry cloth.

It sounds water-flowing in the refrigerator.
• The sound can be heard when the compressor stops. When refrigerant to cools down, the system can make such a sound.

Doors do not open easily.
• Such case happens when you open the door right after closing it. Do not try to force the doors to open; wait about 30 seconds or so.

Front feels warm.
• Front part of cabinet may feel warm because of the hot-pipe to prevent the forming of moisture.

Cracking sound comes out of the inside.
• When the parts inside shrink and expand due to temperature change, such sound can be heard.

Freezer compartment door is opened and shut slightly.
• When you shut the fresh food compartment door quickly, the freezer compartment door is opened and shut slightly of itself. That’s because of the condensed air in the fresh food compartment run to the freezer compartment by closing the door.

Frost forms inside the fresh food compartment
• When the surroundings are hot and humid, if you open and shut the doors frequently. When you store watery food unwrapped, frost may also form. It is all because of the moisture in the air being trapped inside.

Download from Www.Somanuals.com. All Manuals Search And Download.

Description of the appliance

Interior Features
(Option : Water Dispenser)

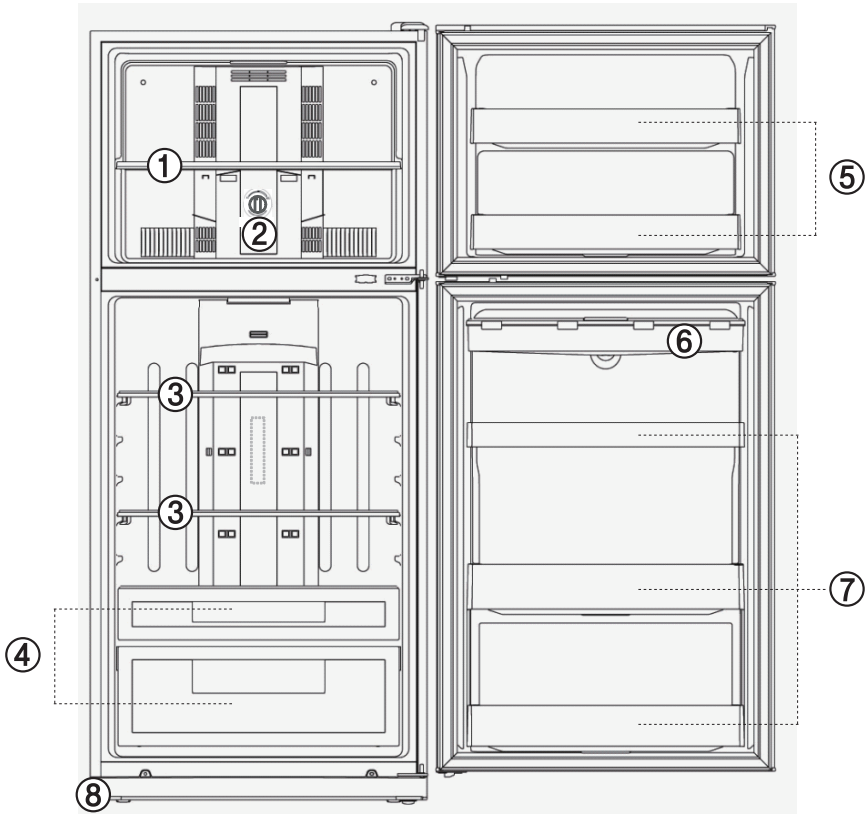

① FREEZER COMPARTMENT SHELF
- Provided to make ice or store frozen food.

② TEMPERATURE REGULATION LEVER OF FREEZER COMPARTMENT
- Used when you want to change temperature of freezer compartment.
- Set the lever to which you want to choose slide (MIN, MED, MAX, WINTER).

③ FRESH FOOD COMPARTMENT SHELF
- Provided to store day to day food.

④ VEGETABLE CASE
- It keeps vegetables fresh at optimal humidity.

* Rollers are installed for easy drawing

⑤ FREEZER COMPARTMENT POCKETS
- Use when storing dried fish, dumpling skin, red pepper powder bean, pizza, spices etc.
- Do not store bottled drinks or foods that will be kept for so long.

⑥ WATER TANK (Not all models)
- Storing fresh and cool water.

⑦ FRESH FOOD COMPARTMENT POCKETS

BOTTLE POCKET
- Storing big bottled drinks, juice, etc.

MULTI-PURPOSE POCKET
- Storing short bottled food, packed drinks and spice containers, etc.

BOTTLE POCKET
- Storing beer bottles, little bottled drinks, etc.

⑧ FRONT COVER
- Don’t let the children step on it for it can be broken.

Download from Www.Somanuals.com. All Manuals Search And Download.

Description of the appliance

Temperature Controls

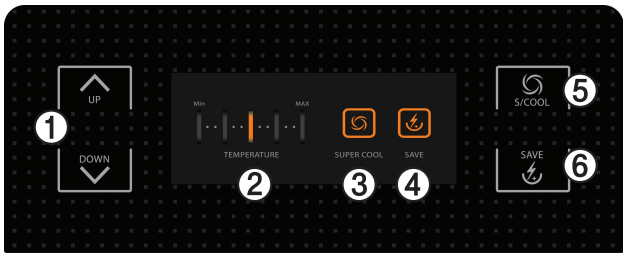

① **TEMPERATURE CONTROL BUTTONS FOR REFRIGERATOR COMPARTMENT**

② **TEMPERATURE INDICATOR OF REFRIGERATOR COMPARTMENT**

③ **SUPER COOL INDICATOR**

④ **SAVE CONTROL INDICATOR**

⑤ **SUPER COOL BUTTON**

⑥ **SAVE CONTROL BUTTON**

REFRIGERATOR COMPARTMENT

• Normal Mode (3rd light up) starts when the refrigerator is frist plugged in.

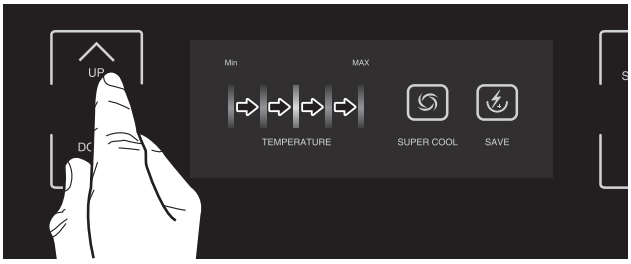

• The temperature values are indicated steplessly from the lowest to the highest temperature.

SUPER COOL

S/COOL

Function for rapid cooling of foods or drinks which are to be stored in the refrigerator compartment.
Each time the button is pressed, the function is activated or deactivated.

SAVE CONTROL

SAVE

Function for weak cooling to save the energy.
Each time the button is pressed, the function is activated or deactivated.

DEFROST CONTROL

• This refrigerator is frost free, which means there is no need to manually defrost. It will be carried out automatically.
• If you want to prevent an undue rise in the temperature of the frozen food while defrosting the appliance, please wrap the frozed food in several layers of paper such as newspaper.

FREEZER COMPARTMENT

• For ordinary use,

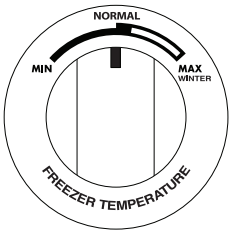

• When surround temperature is under 10°C,

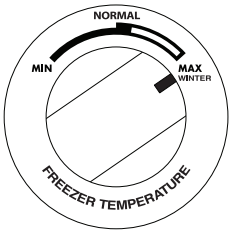

Download from Www.Somanuals.com. All Manuals Search And Download.

Description of the appliance

Water Dispenser(Option)

Note

- Put water after the water tank is in position.
- Separate the water tank to clean it.
- When the water tank is not in position after filling it with water, water can leak out by the valve.

Putting water in the water tank

1. Open the cover cap and pour water into the water tank.

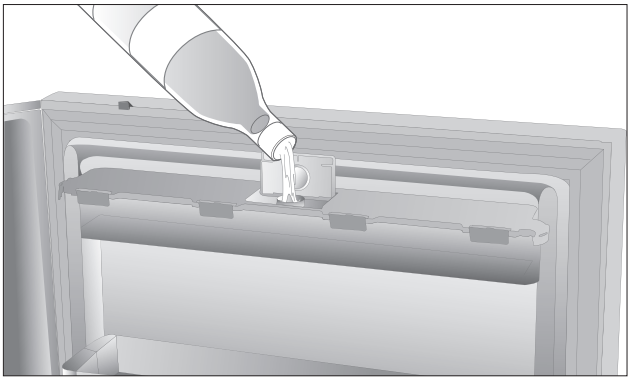

2. Close the cover cap.

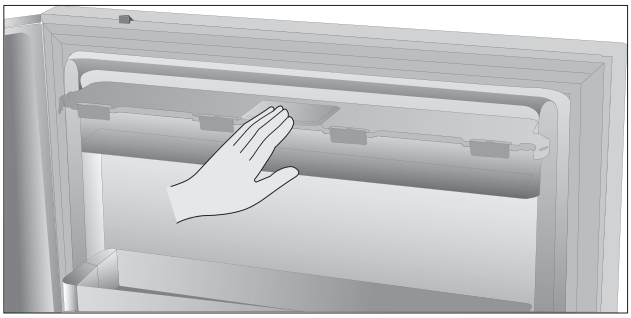

Caution

- Do not use anything other than water.
- Hot water needs to be cooled before being put in the water tank.

Drinking

1. Press the dispenser pad with cup.
2. The water is released when the dispenser pad is pressed. The pad returns to its original position when the cup is removed and the water stops its flow.



Removing and cleaning the water tank.

1. Pull out the water tank, with the stopper pressed towards the arrow mark.
2. Empty and clean the water tank with soft sponge and tepid rinsing water.

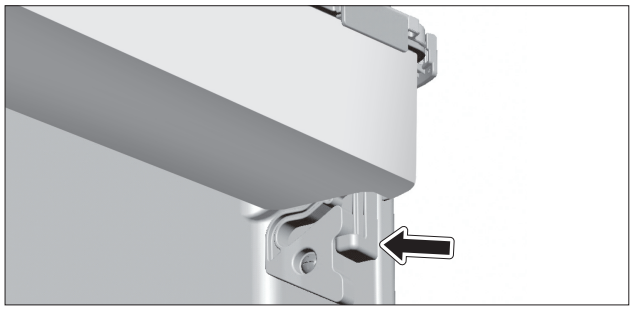

Download from Www.Somanuals.com. All Manuals Search And Download.

Care & Cleaning

Before Cleaning
- When the outside(cabinet, doors) is stained with cooking oil or dirt, wipe it out quickly.
- To keep the inside sanitary without odor or dirt, regular cleaning required at least once a month.
- Spills of cooking oil, butter etc. can cause the parts of plastics to crack.

In Cleaning
- Do not pour water to the refrigerator directly.
- Cleaning the inside, do not use chemical(alkaline) detergent, wax, gasoline, alcohol, benzen, thinner, hot(boiling) water, scrubber etc., cleaning the doors and cabinet, avoid solvent, abrasives, spray-on cleaners etc.
- Instead, use soft cloth with dish washer and clean up with water, dry with a soft cloth.

After Cleaning
- See to the followings after cleaning. If something's wrong, call for service.
- Is the power cord peeled?
- Is the plug hot unusually?
- Did you plug in the outlet firmly?

Front & Rear Rollers
- When cleaning the floor under refrigerator or the behind, shorten the hight adjusting feet until the front rollers touch the floor enough and move the refrigerator.
- After cleaning, level the refrigerator by turning the feet. (See 17 page)

EVAPORATION DISH

New evaporating system, no need to clean at ordinary use. If it has to be cleaned due to strong odor at midsummer, see the following instruction.

1) Unplug the refrigerator.
2) Unscrew the cover below back of refrigerator and clean the dish.
3) After cleaning the dish, screw the cover and check if anything wrong.

*While cleaning, be careful not to be hurt by hot pipes, compressor etc. and not to breake system parts

Download from Www.Somanuals.com. All Manuals Search And Download.

Helpful Hints

In case of power failure

- Do not open and shut the doors, if possible, then no problem storing the food 2~3 hours long even in the midsummer.
- In case of predicted power failure, do not store any more food and make as much ice as you can to put it on the upper shelf of fresh food compartment. The inside would be kept cold.

When not using for a long time

- Clean the inside and leave the doors open for 2~3 days in order to prevent mold development or odor saturation.

Handle installation
(FR-651N../FN-651N.. models only)

1. Fix the fixture with the bolt (supplied) and screw driver (+).

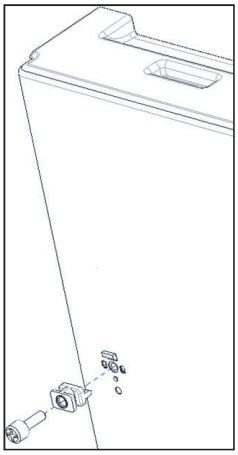

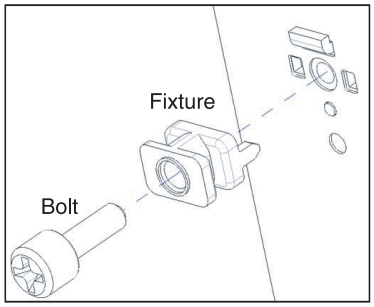

2. Align door handle with fixture and pull the handle down.

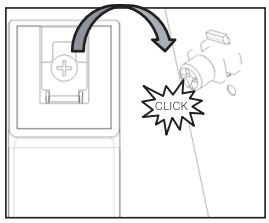

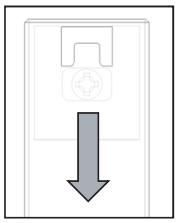

3. Fasten the screw in the hold of handle.

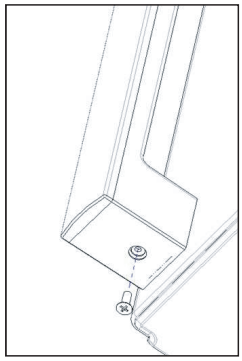

Download from Www.Somanuals.com. All Manuals Search And Download.

Free Manuals Download Website

http://myh66.com

http://usermanuals.us

http://www.somanuals.com

http://www.4manuals.cc

http://www.manual-lib.com

http://www.404manual.com

http://www.luxmanual.com

http://aubethermostatmanual.com

Golf course search by state

http://golfingnear.com

Email search by domain

http://emailbydomain.com

Auto manuals search

http://auto.somanuals.com

TV manuals search

http://tv.somanuals.com