GRAM STANDARD PLUS K/M/F 69



User manual

GRAM



Gram Commercial A/S
Aage Grams Vej 1
6500 Vojens
+45 73 20 12 00
www.gram-commercial.com

Contents

Application 4
Safety information 5
Location 6
General description 9
Electrical connection 10
General use 11
Operating the product 13
Keyboard lock 14
Errors and alarms 15
HACCP alarms 16
Setting of HACCP alarm values 17
Display of HACCP alarms 17
Deletion of HACCP alarms 18
Troubleshooting 19
Defrosting 20
Defrost water 21
Door closing mechanism 22
Power failure 22
Cleaning 22
Cleaning of condenser filter 23
Door gaskets 23
Long term storage 23
Service 24
Disposal 25
EC-Declaration of conformity 26
Wiring diagram Standard Plus K/M 27
Wiring diagram Standard Plus F 28
Piping diagram 29

ENGLISH

Thank you for choosing a quality product from Gram Commercial.

This manual will advise you how to install, use and maintain your new product.

Before our products leave the factory, they undergo a full function and quality test. Should you nevertheless experience problems with the product, then contact your local dealer.

Gram Commercial subsidiaries and dealers placed all over the world are ready to help you.

Gram Commercial supplies warranty on all products.
This warranty is subject to correct use according to specifications, where e.g. common maintenance and eventual repairs are carried out by Gram Commercial techicians or technicians with knowledge of the products.

Changes in installation and other use of the procuct than prescribed in this manual, might affect the operation and durability of the product.

The manual is written according to our current technical knowledge. We constantly work on updating this information, and we reserve the right to make technical changes.

Application

This product is designed for storage of foodstuff at a constant temperature. The product may not be used for chilling or freezing of foodstuff.

The product is only to be used for the purpose for which it has been expressly designed. Any other use could cause that the products stored in the product are not kept at the right temperature.

The manufacturer will not be held liable or responsible for any damage caused by improper, incorrect or unreasonable use.

Safety information

Important

Description of symbols used in this manual.



Warning Lacking observation to these instrucions might result in accidents with personal injury.



Important If these instructions are not observed, the product might be damaged or destroyed.

Be aware that Gram Commercial has taken precautions to ensure that the safety of the product is in order.

Please read carefully the following information regarding safety.



It is important, that everyone who are to use or install the product, to have access to this manual.



This appliance is not intended for use by persons with reduced physical, sensory or mental capabilities, or lack of experience and knowledge, unless they have been given supervison or instruction concerning use of the appliance by a person responsible for their safety.



Children should be supervised to ensure that they do not play with the appliance.



The appliance might contain parts with sharp edges in the compressor compartment, and in the inside compartment.



The appliance is not to be transported on a sack truck, there is a danger of loosing the balance, causing danger to persons.



Do not pull the power cord to dicconnect the appliance, or when moving the appliance.

Location

When receiving the product, check the packaging material for damage.

If any damage occurs at the packaging material, it should be considered if the product might have been damaged too. If the damage is substantial, please contact your dealer.

The transport pallet can be removed by loosening the screws that fasten the pallet to the product.

⚠ This task requires at least 2 persons.The heaviest part of the product is at the top. Be aware of this, when removing the transport pallet.

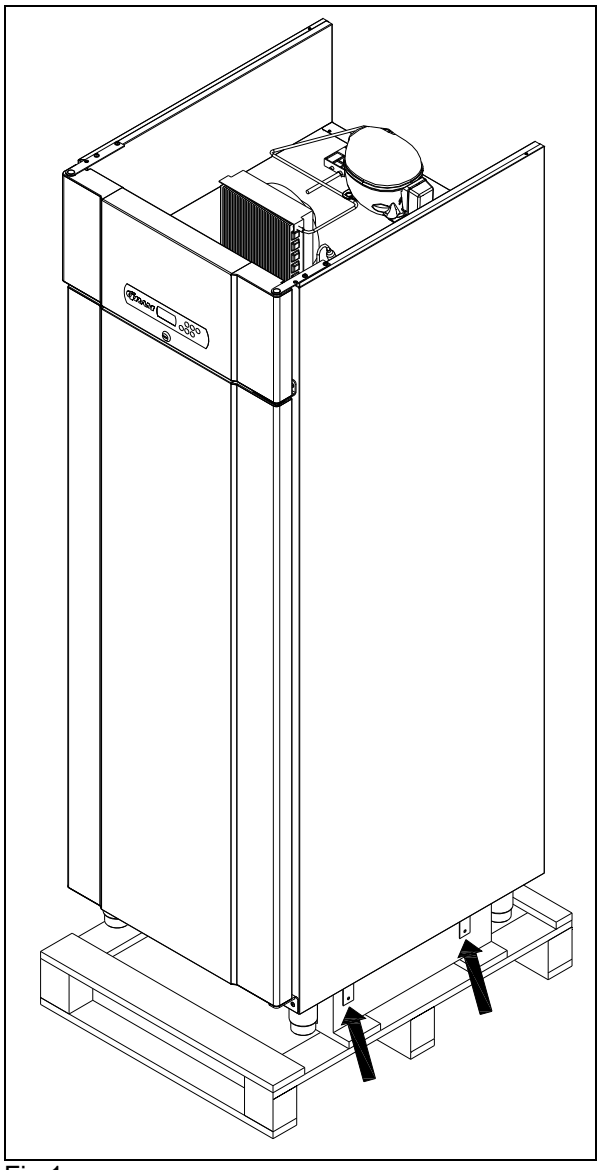

Fig.1

- If the cabinet has been transported in horizontal position it must stand upright at least 2 hours before it is started to allow the oil from the compressor to run back.
- Because of the heavy weight of the product, the floor might be damaged or scratched when moving the product.
- Correct set up gives the most effective operation.
- The product should be located in a dry and adequately ventilated room.
- To ensure efficient operation, it may not be placed in direct sunlight or against heat-emitting surfaces. The product is designed to operate in an ambient temperature between +16°C and +40°C.
- Avoid placement of the product in a chlorine/acid-containing environment (swimming bath etc.) due to risk of corrosion.
- The product and parts of the interior is equipped with a protecting film, which should be removed before use.
- Clean the product with a mild soap solution before use.

The set up place must be level and horizontal.

For versions with legs, use the adjustable legs to make sure that the product stands level and upright.

For versions with castors, the locking devices of the two front castors must be activated, when the product is in place. The base must be level, and the product may not be placed on frames or the like.

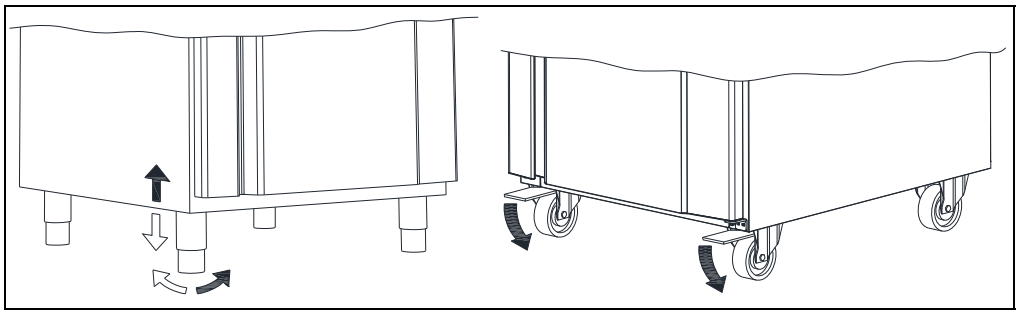

Fig. 2

There must always be 20 cm of free space above the product, to ensure that the heat from the condenser can be led away.

The product should be placed as close as possible up against the wall. For products with a heating element in the tray on the cabinet backside, however max. 75 mm from the wall.

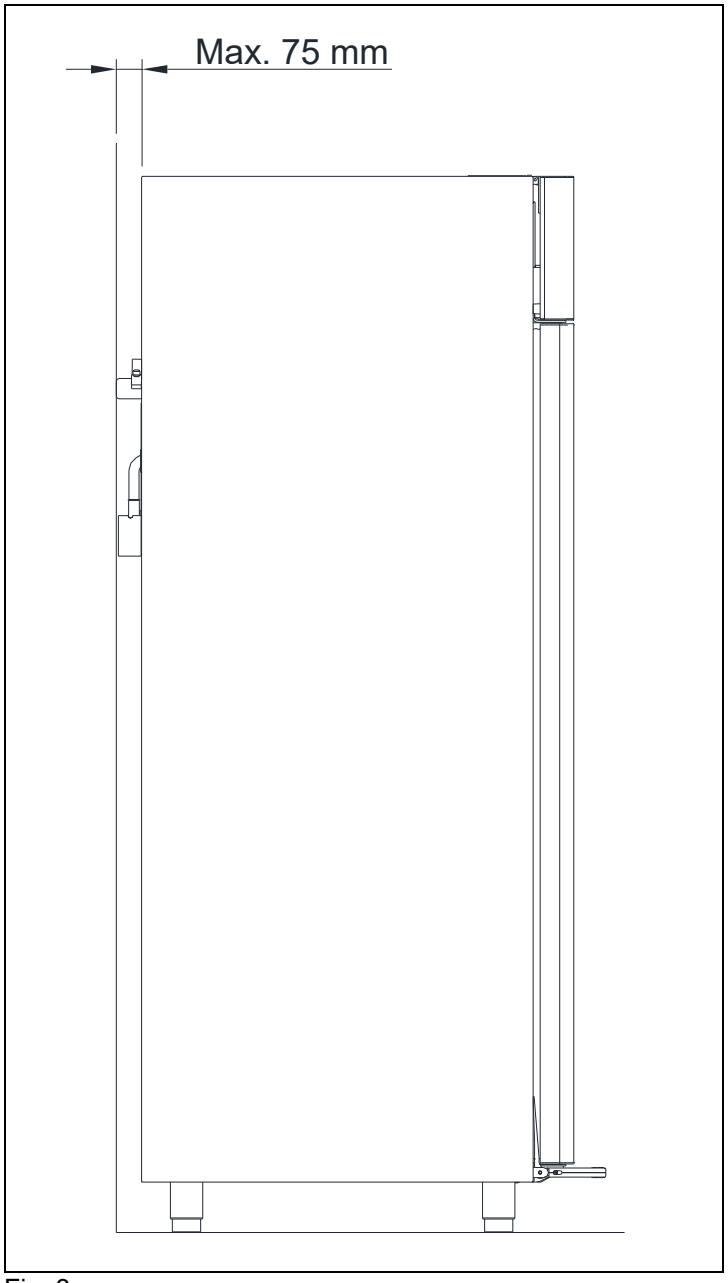

Fig. 3

General description

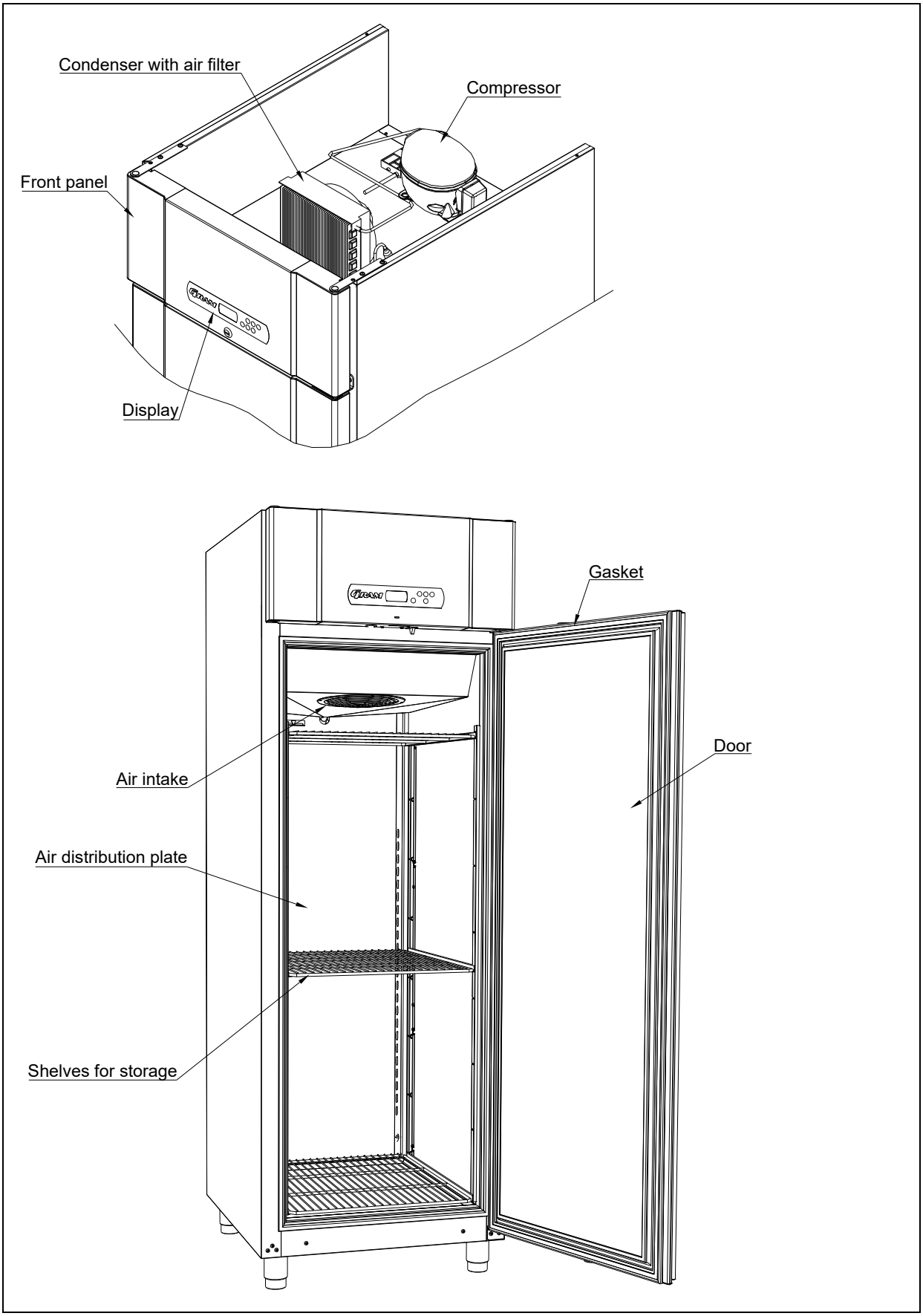

Fig. 4

Electrical connection

Read the text below thoroughly before electrical connection.

The product is intended for connection to alternating current. The connection voltage (V) and frequency (Hz) are shown on the name plate in the cabinet (see Fig. 8). Only the supplied cord is to be used.

Never use an extension cord for this appliance!
If a wall socket is placed in a longer distance than the length of the supplied power cord, contact an electrician to establish a wall socket within the range of the supplied power cord.

If the product is defective, it must be examined by a service electrician advised by Gram Commercial during the guarantee period, if it is a product with built-in compressor.
If it is a product connected to an external compressor unit, it must be examined by the company who has connected the product to the unit.
Outside the guarantee period, it is advisable to use the service advised by Gram Commercial, if possible. If this is not the case, assistance is required from a refrigeration company with knowledge of Gram's products.

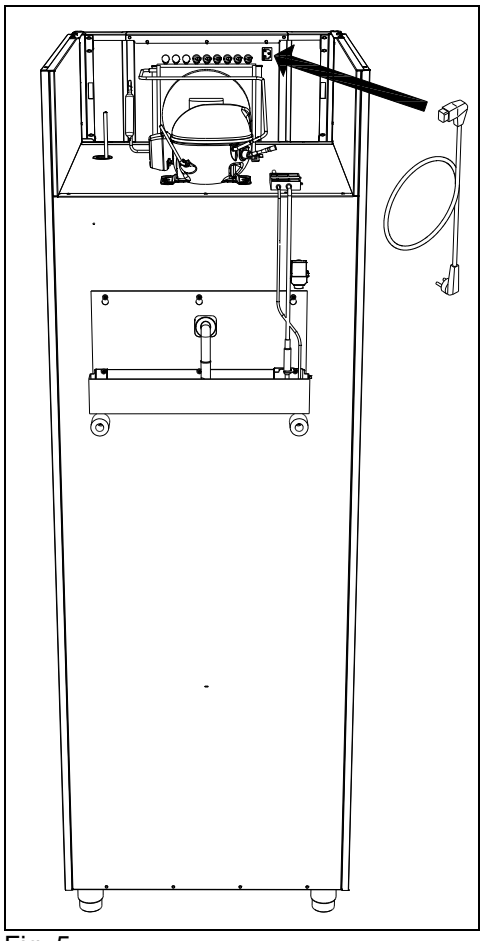

Fig. 5

Always disconnect the power if interruptions in power supply occur, and when electrical parts are removed/put on, and before cleaning and maintenance of the product.

Repairing of electrical/technical parts may only be performed by a service electrician from Gram Commercial or an authorised refrigeration company with knowledge of Gram's products.

Do not use the product before all coverings are installed, so that live or rotating machine parts can not be touched.

The product is not to be used outdoor.

All earthing requirements stipulated by the local electricity authorities must be observed. The plug and wall socket should then give correct earthing. If necessary, contact an electrician.

Make sure the product is switched off at the socket before service is performed on electrical parts. It is not sufficient to switch off the product by the START/STOP key as there will still be voltage to some electrical parts of the product.

General use

Do not block vent holes in the front panel.

Do not damage the refrigeration system parts.

During normal operation, some parts of the refrigeration system in the compressor compartment might reach high temperatures, and could therefore cause burns if touching these components.

Do not use electrical devices inside the product.

To ensure correct and efficient air flow in the cabinet, the shaded areas must be kept free of items. (see Fig. 6)

All items to be stored, that are not wrapped or packed, must be covered in order to avoid unnecessary corrosion of the inner parts of the cabinet.

If any controller parameters are changed from default, this could cause that the product is not functioning normally, and harmful temperatures could damage items that are kept inside the product.

If the product is turned off, wait minimum 3 minutes before turning it on again. This is to protect the compressor from damage

Maximum loading of wire shelf: 40 kg

Do not store explosive substances such as aerosol cans with flammable propellant in this appliance.

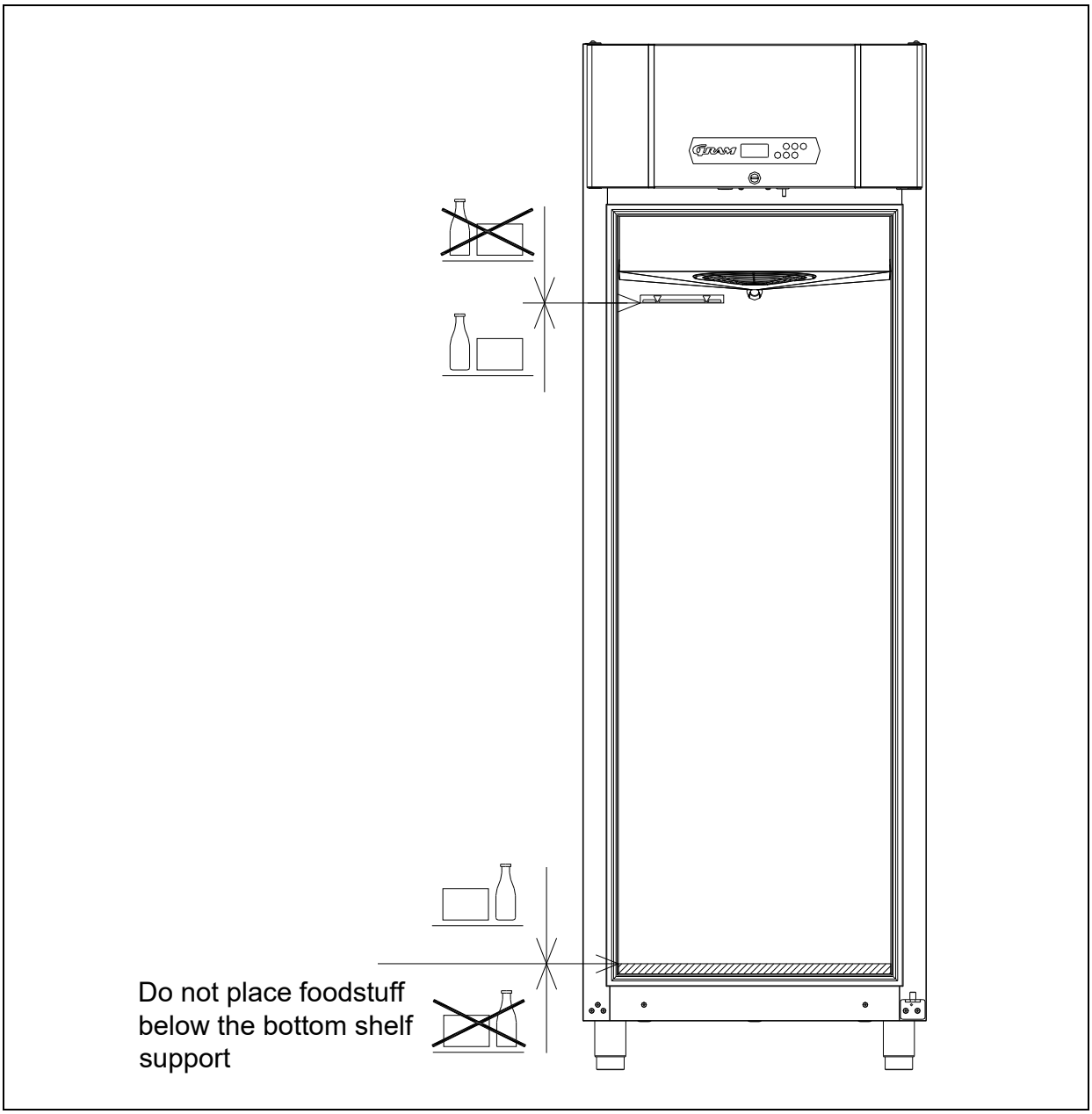

Fig. 6

Operating the product

STANDARD PLUS



Display	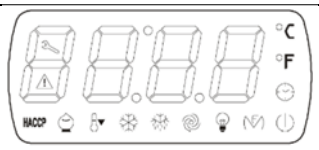	The display contains the elements that are shown to the left of this text. Not all the symbols shown are used in this product. The symbols that are used are described below. The temperature is shown in the 4 alphanumeric positions. The individual symbols show what is in operation.
Symbols	HACCP	If this symbol is lit, not all HACCP alarms have been displayed. If this symbol flashes, the controls have stored at least one new HACCP alarm. If this symbol is not lit, then all HACCP related alarms have been shown or the alarm log has been deleted.
		If this symbol is lit, then the compressor is in operation. If this symbol flashes, the set point of the controls is about to be changed or the compressor is being prevented from starting due to various safety parameters in the controls.
		If this symbol is lit, the controls are performing a defrosting process. If this symbol flashes, the drip time after defrosting is under way or defrosting could not be commenced due to the compressor's operation preventing this defrosting.
		If this symbol is lit, then the evaporator fan is in operation. If this symbol flashes, it means that the evaporator fan has been deactivated/limited in starting by various parameters in the controls.

		When this symbol is lit, the frame and drainage heating elements respectively have been switched on (only applies to freezers).
		When this symbol is lit, the cabinet is in energy-saving mode.
		When this symbol is lit, it is time to clean the cabinet's condenser
		When this symbol is lit, there is a current alarm or a sensor fault that needs to be addressed.
		This symbol indicates that the temperature in the display is in °C
		When this symbol is lit, the cabinet is in standby.
Operating buttons		On/off button. Used to switch the cabinet on or off and to exit a menu.
		Press the P button to set the desired temperature in the cabinet /Set point. This button is also used as a ”select” button.
	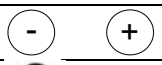	+/- buttons. Up/down when making settings.
		The alarm clock is used in connection with temperature alarms
		The defrosting button is used to initiate manual defrosting

Start-up:

Connect the product to the electrical outlet. If the product starts in Standby, do the following:

- Press the button  for approx. 2 sec to switch the product on.

Upon start-up, the display will show the current temperature in the cabinet and relevant control lights will be lit.

Keyboard lock

If the display is locked, attempts to switch the cabinet off or to enter settings will result in the display showing Loc. In this state, no settings can be made on the controls.

The keyboard for the controls can be unlocked by simultaneously pressing  and  for approx. 1 second. The display will now show UnL, and the display is unlocked.

The keyboard can be locked in the same manner. After being locked, the display will show Loc, and the display is locked.

Changing the temperature:

To set the desired set point, do the following:

- Briefly press the button (P). Once this has been done, the product's current set point is shown in the display. Furthermore, the symbol ❄ will flash as an indication that the set point is about to be changed. The set point can now be changed using (+) or (-).
- Each time (+) or (-) is pressed, the temperature is changed by 0.1 degrees up or down respectively. If (+) or (-) is pressed continuously, then the set point is changed continuously.
- Once the desired set point has been set, the new value is shown in the display.
- Pressing the button (P) saves the new set point setting, and the cabinet's controls
  return to normal operation.

If there is no confirmation by pressing the button (P), the controls will return to normal operation after 15 seconds. Those changes that might have been performed with respect to the set point will then be saved such that the value set will become the cabinet's new set point.

Errors and alarms

SENSOR ERRORS

Display	Explanation
Pr1 ⚠	Room sensor error. The error display will persist until the fault is remedied. Service is required for the product.
Pr2 ⚠	Evaporator sensor error. The error display will persist until the fault is remedied. Service is required for the product.

ALARMS

Display	Explanation
ʟ**d**	Door alarm, if the door remains open or is not properly closed. This alarm is cancelled when the door is closed again properly.
AH ⚠	High temperature alarm. This alarm is saved in the alarm log.
AL ⚠	Low temperature alarm. This alarm is saved in the alarm log.

For all alarms, press (P) to acknowledge the alarm. The display will then revert to its normal content.

HACCP alarms

The controls can store up to three HACCP alarms. The information saved for these alarms is:

- The critical value(s)
- Duration of the alarm

The controls can display the following alarms:

- **AL** – Low temperature alarm. The read-out provided by the controls for the alarm shows the lowest temperature that has occurred in the cabinet and how long the cabinet temperature has been under the set alarm value (A1).
- **AH** – High temperature alarm. The read-out provided by the controls for the alarm shows the highest temperature that has occurred in the cabinet and how long the cabinet temperature has been above the set alarm value (A4).
- ʟ**d** – Door alarm. The read-out provided by the controls for the alarm shows the highest temperature that has occurred in the cabinet during this type of alarm and how long the door has been open.

The alarms are displayed in the order above. In other words, if only a ʟ**d** door alarm is shown, it is because no **AL** or **AH** alarm has been registered for the cabinet.

Since the settings for the temperature-related alarm values are derived directly from the use of the product, it is an individual choice from customer to customer as to what the alarm parameters should be set to. The default settings for the three alarm parameters that can be set by the customer are described below.

- A1 – Low temperature alarm limit. The default setting is -35°C
- A4 – High temperature alarm limit. The default setting is +25°C
- A7 – Time delay for A1 and A4. The default is 60 minutes.

This means that the alarms will not be triggered during normal operation. For an alarm to be triggered with the above settings, the temperature in the cabinet must have been under -35°C or above +25°C for more than 60 minutes.

The above values can easily be changed to adapt the alarm limits to the specific need.

NOTE: It is important that the alarm values not be set too narrowly in relation to the cabinet's set point. A window that is too narrow would result in too many alarms.

Setting of HACCP alarm values

This is done by pressing (+) and (-) simultaneously until A1 is shown in the display. Then press (+) or (-) to switch between the individual parameters (A1, A4 and A7). The PA parameter, which appears when browsing as described above, is not used in this manual, hence it can be ignored.

When the display shows the parameter that is desired to be changed, press (P). Once this is done, the current numerical value of the selected alarm is displayed (either the temperature (A1 or A4) or the time in minutes (A7)). To change the value, press (+) or (-). When the desired value is shown, confirm by pressing (P). This causes the value to be saved and the controls to return to the alarm parameter's name (A1, A4 or A7). When the desired settings for all three parameters have been made and saved, exit the menu by pressing the button (⏻) .

Display of HACCP alarms

If there have been or still are one or more alarms for the cabinet, this will be indicated by the controls.

When HACCP is continuously lit in the control display, not all HACCP alarms have been read out.

If HACCP flashes, the controls have stored at least one new HACCP alarm.

If HACCP is not lit, then all HACCP related alarms have been shown or the alarm log has been deleted.

If one or more alarms are active for the cabinet, then the symbol ⚠ will be lit. Active alarms cannot be deleted.

If HACCP is either continuously lit or flashing in the display, it is possible to read out the alarm(s) contained in the log. This is done by pressing the button  . This action causes LS to appear on the control display. Pressing (P) will then cause information on the first possible alarm type to be displayed. Pressing (+) or (-) will cause the controls to switch between the different alarms if there are more than one type. When the alarm for which data is desired to be read out is reached, then do the following.

Example:
The controls show AH. Press (P).

The controls will now show the data that relates to the AH alarm. Each individual step is shown for approx. 1 second. The sequence is as follows:

DISPLAY	EXPLANATION
15.4	The critical highest temperature under the AH alarm in °C
dur	Duration of the alarm
H01	Number of hours the temperature alarm has lasted (1 hour)
n20	Number of minutes the temperature alarm has lasted (**n** is used because the display cannot write "m" for minutes)
AH	Alarm type (AH for high temperature alarm)

The above means that there has been max. 15.4°C for 1 hour and 20 minutes beyond the time delay that has been selected in parameter A7. If A7 is set to 60 minutes, then the temperature in the cabinet will thus have been outside its permissible value for 2 hours and 20 minutes.
If other alarms have been registered, it will be possible, when the controls again show AH, to move between them by using (+) or (-). Reading these out subsequently occurs by pressing (P) as described above. To leave this part of the display and return to the LS display, press once on . To exit the alarm log, press once on  or twice on . To delete the alarm log instead, do as described in the following.

Deletion of HACCP alarms

When all relevant alarms have been checked and none of them are active any longer, then the log can be deleted in the manner described below.

Deletion of alarm log:

This is done by pressing once on the button , after which the display shows LS. By pressing once more on  the display will show rLS, which is the reset of the alarm log. When this appears in the display, then press (P). The display now shows 0. Press the button (+) until the display shows 149. Pressing the button (+) continuously causes the numerical value to change more quickly. If you run past 149, the button (-) can be used to correct the value. When the display shows 149, confirm the deletion by pressing (P). The controls confirm the deletion by showing ” **----** ” which will flash for 4 seconds. When this occurs, HACCP is shut off in the display and the controls return to normal operation.

This is done so that there is no doubt as to whether the alarms one sees at a later point in time are a mixture of old and new alarms. If it becomes a habit to delete alarms once they have been checked, it becomes easier to know the space of time in which the critical conditions that are currently being shown as alarms have arisen.

Troubleshooting

Noise:

- If abnormal noise occurs, request service assistance.
- Operating sounds from compressor, condenser fan and interior fan are normal. Some models are equipped with a drain pump.
- If sheet metal parts, front panels or panels in front of the compressor compartment are making noise, these might be open. Close the panels.

Frosting inside compartment:

- Ambient humidity too high.
- The door is opened too often.
- The door is left open for too long.
- Damaged door gasket. Check it thoroughly for damages.

Poor cooling performance:

- Ambient temperature too high.
- The door is opened too often and/or open for too long.
- The door is left open.
- Damaged door gasket.
- Temperature setting too high.
- Product too packed with foods - air inlet/outlet blocked.
- Condenser air filter is clogged.
- Warm or hot foods inside the product.
- Defrost in progress. The cabinet temperature may rise temporarily during the defrost cycle, but it will not affect the foods inside. The defrost symbol  is displayed.

Some of the foods are frozen:

- Product too packed with foods - air inlet/outlet blocked.
- Temperature setpoint too low.
- Evaporator fan might be defective.

Condensation around the door:

- Ambient humidity too high.
- The door is not closed tightly.
- Damaged door gasket.

Too high energy consumption:

- Ambient temperature too high.
- The door is opened too often and/or open for too long.
- The door is left open.
- Damaged door gasket.
- Temperature setpoint too low.
- Product is too packed with foods - air inlet/outlet blocked.
- Condenser air filter is clogged.
- Warm or hot foods are brought into the product.
- Product is placed in direct sunlight or close to heat-emitting surfaces.
- The default settings have been changed.

Defrosting

Normal defrosting takes place automatically 4 times per day. If the product is under an extremely intense load (frequent openings of the door and frequent replacement of the goods), it may become necessary to perform manual defrosting.

Starting manual defrosting: Press the button  for more than 4 seconds.

The symbol  will be lit while defrosting is occurring. After defrosting has been concluded, the symbol  will flash to indicate a drip time. Immediately after the drip time has been completed, the cabinet's refrigeration system will start up again.

If pressing the button as described above does not result in defrosting being performed, then the reason is:

- that the evaporator is ice-free, which means that defrosting is not necessary.
- that the defrosting is delayed, due to the compressor is running. This is indicated by  is flashing.

Shortly after defrosting has been completed, the compressor starts, and the symbol  is lit to indicate that the refrigeration process is working once again.

 Do not use sharp or pointed objects to accelerate the defrosting process.

Defrost water

The product generates defrost water during defrosting, which is conducted out into a re-evaporation tray at the back of the product (see Fig. 7).

A re-evaporation tube from the cooling system on freezers or an electric heating element placed on the tray for refrigerators (K and M models) will enable the water to be re-evaporated.

Cleaning the re-evaporation tray at the back of the product is recommended as needed and at a minimum once annually. Remember to shut off the electrical power to the product before cleaning.
Be careful not to damage the re-evaporation tube on freezers or the re-evaporation heating element and associated float switch in refrigerators in connection with any cleaning.

Please note that the re-evaporation components placed on the back of the cabinets can be hot. This applies both for the pressurised tube on the freezer as well as for the heating element on the refrigerators. Use proper means of protection (gloves) to avoid burns in connection with cleaning the re-evaporation trays.

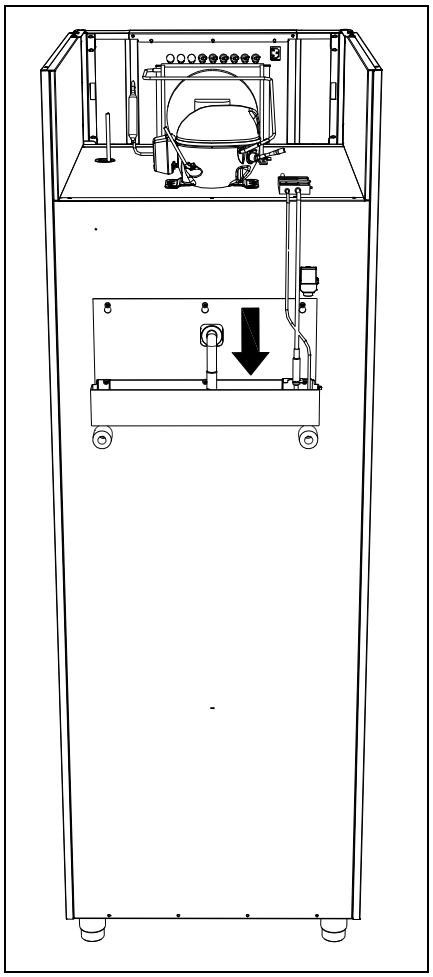

Fig. 7

Door closing mechanism

The door is equipped with a self-closing system. If the door is opened less than 90°, it will close by itself. If the door is opened more than 90°, it will stay open.

The door can be opened by using the foot pedal. This leaves both hands free when placing foodstuffs the cabinet.

Power failure

In the event of a power failure, the control remembers the temperature setting and restarts the product when power is restored. If the power failure persists for some time, the control might revert to the factory setting.

Cleaning

Insufficient cleaning will cause that the product will not work at optimum perfomance, or eventually it will be defective.


Before cleaning, the product should always be disconnected.


Do not flush the product with water, do not use water jet or steam hose as this may cause short-circuits in the electrical system.


Cleansing agents containing chlorine or compounds of chlorine as well as other corrosive means, **are not to be used**, as they might cause corrosion to the stainless panels of the cabinet and the evaporator.


The compressor compartment and in particular the condenser must be kept free from dust and dirt. This is best done with a vacuum cleaner and a brush.
The air filters on the condenser and the front panel can be removed and cleaned in a dishwasher at max. 50°C.


For the external maintenance – use stainless steel polish.


The product should be cleaned internally with a mild soap solution at suitable intervals and checked thoroughly before it is put into operation again.

Cleaning of condenser filter

Reminder about cleaning the condenser's air filter:

To ensure the proper operation of the cabinet, it will be periodically indicated that the filter in front of the condenser has to be cleaned. This is indicated by the warning light being lit.

Resetting of condenser filter alarm:

After the filter has been cleaned, the controls must be reset to remove the filter alarm. Resetting can only be done by a specific key combination.

- Press the button (-) until the control display shows a combination of letters.
- Using the button (+) or (-), press if necessary until the display shows rCH.
- When the display shows rCH, then press (P).
- Then press the button (+) or (-) until the display shows 149.
- When the display shows 149, press (P).
- This causes the display to show ---- for approx. 4 seconds, which confirms that the counter has been reset.

Now the warning light is shut off and the controls return to normal operation.

Door gaskets

This chapter deals with the importance of a well-functioning door gasket.

Gaskets are an important part of a refrigerator/freezer. Gaskets with reduced functionality, reduces the tightness of the cabinet. Reduced tightness might cause increased humidity, internal icing, an iced up evaporator (leading to reduced refrigeration capacity), and in worst case reduced lifecycle of the cabinet.

Therefore it is important to be aware of the condition of the gasket. Regular inspection is recommended.

The gasket should be cleaned regularly with a mild soap solution.

If a gasket needs replacement, contact your supplier.

Long term storage

If the product is taken out of operation, and need to be prepared for long-term storage,
clean the inside compartment, the door and door gasket thorougly with a hot soapy damp cloth.
Eventual remnants of food could create mould.

Service

The refrigerating system and the hermetically sealed compressor require no maintainance - they merely have to be kept clean.

If refrigeration fails, first investigate whether the unit has been unintentionally disconnected or switched off at the socket, or whether a fuse has blown.

If it is not possible to find the cause of the refrigeration failure, please contact Gram service department.

When contacting us please tell us the name and serial number (S/N) / (WWYY) of the cabinet. This information is stated on the name plate, see Fig. 8.

Location of the name plate:

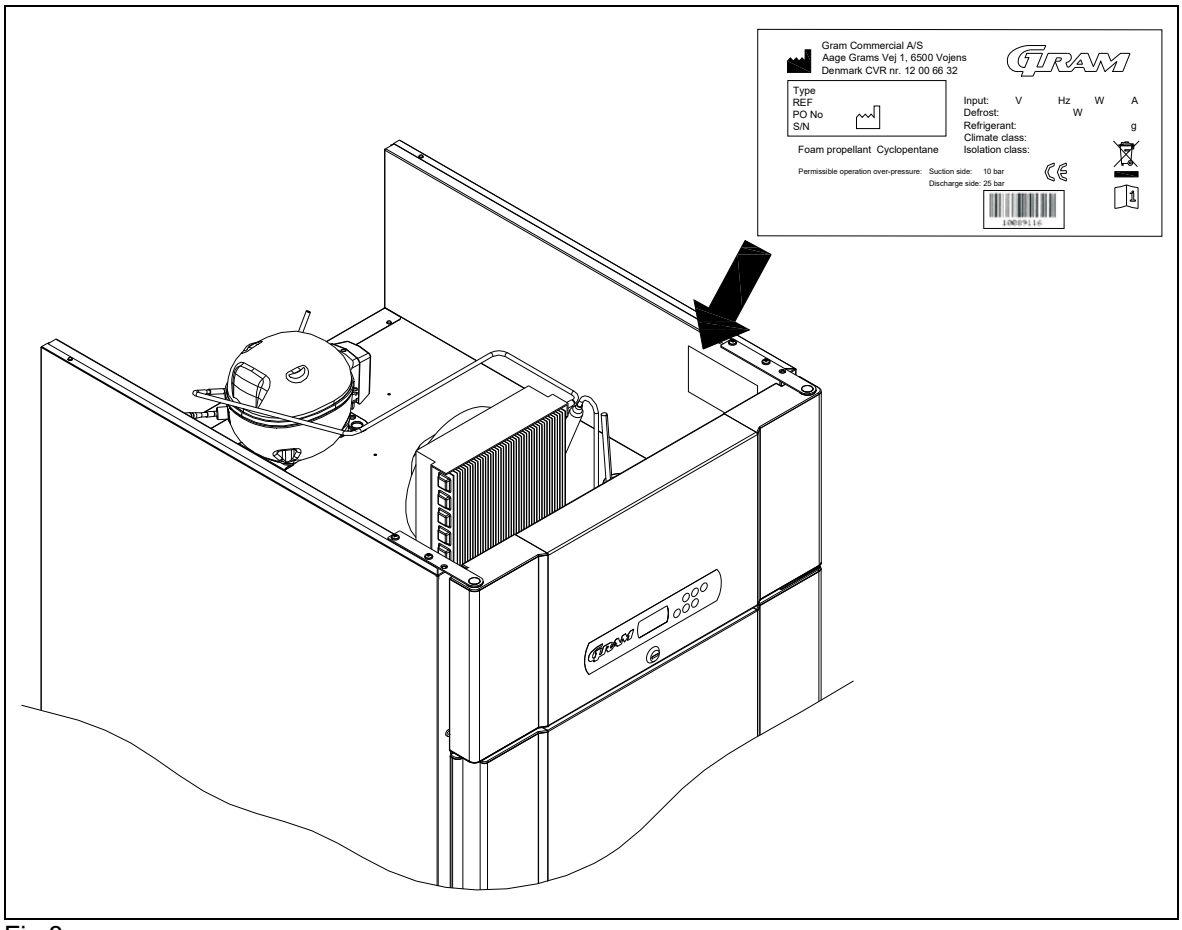

Fig.8

Disposal

The below only concerns the United Kingdom.

Disposal of an old cabinet is only available when we are delivering a new one at the same time. Cabinets must be fully defrosted and emptied prior to collection.

Gram recognises that our products for the catering market are considered as WEEE when they become obsolete. To ensure that Gram's responsibilities are handled correctly and environmentally friendly, we are signed up the largest Business to Business compliance scheme in the UK – B2B Compliance
http://www.b2bcompliance.org.uk

B2B Compliance will on our behalf deal with all areas of our responsibilities when collecting and disposing of equipment which fall under the UK WEEE regulations. B2B Compliance can be contacted on telephone number 01691 676124.

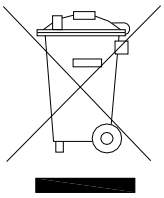

EC-Declaration of conformity

Producer	Name:	Gram Commercial A/S
	Adress:	Aage Grams Vej 1, 6500 Vojens
	Tel.:	+45 73 20 12 00
Product	Model:	Standard Plus 69
	Refrigerant:	R134a, R404A, R290
	Year:	2016

Directives

The product is in compliance with all the essential health- and safety requirements and provisons in:

Directive for Machinery 2006/42/EF

The product is where relevant in compliance with the following other directives:

Design of energy related products 2009/125/EF

Regulation 2015/1095

Energy labelling directive 2010/30/EU

FCM regulation 10/2011

Regulation 1935/2004

RoHS - 2011/65/EU

Standards

The following standards are used to the extent necessary to comply with the relevant directives:

DS/EN 12100:2011 - Safety of machinery -- General principles for design -- Risk assessment and risk reduction

DS/EN 60335-1:2012 – Household and similar electrical appliances. Safety. General requirements

DS/EN 60335-2-89:2010 – Household and similar electrical appliances. Safety. Particular requirements for commercial refrigerating appliances with an incorporated or remote refrigerant condensing unit or compressor

DS/EN 16825:2016 – Refrigerated storage cabinets and counters for professional use. Classification, requirements and test conditions

Person responsible for technical dossier	Company:	Gram Commercial A/S
	Adress:	Aage Grams Vej 1
	Name:	John Lund

Signature Vojens 18/11-2016 R&D Manager



Wiring diagram Standard Plus K/M

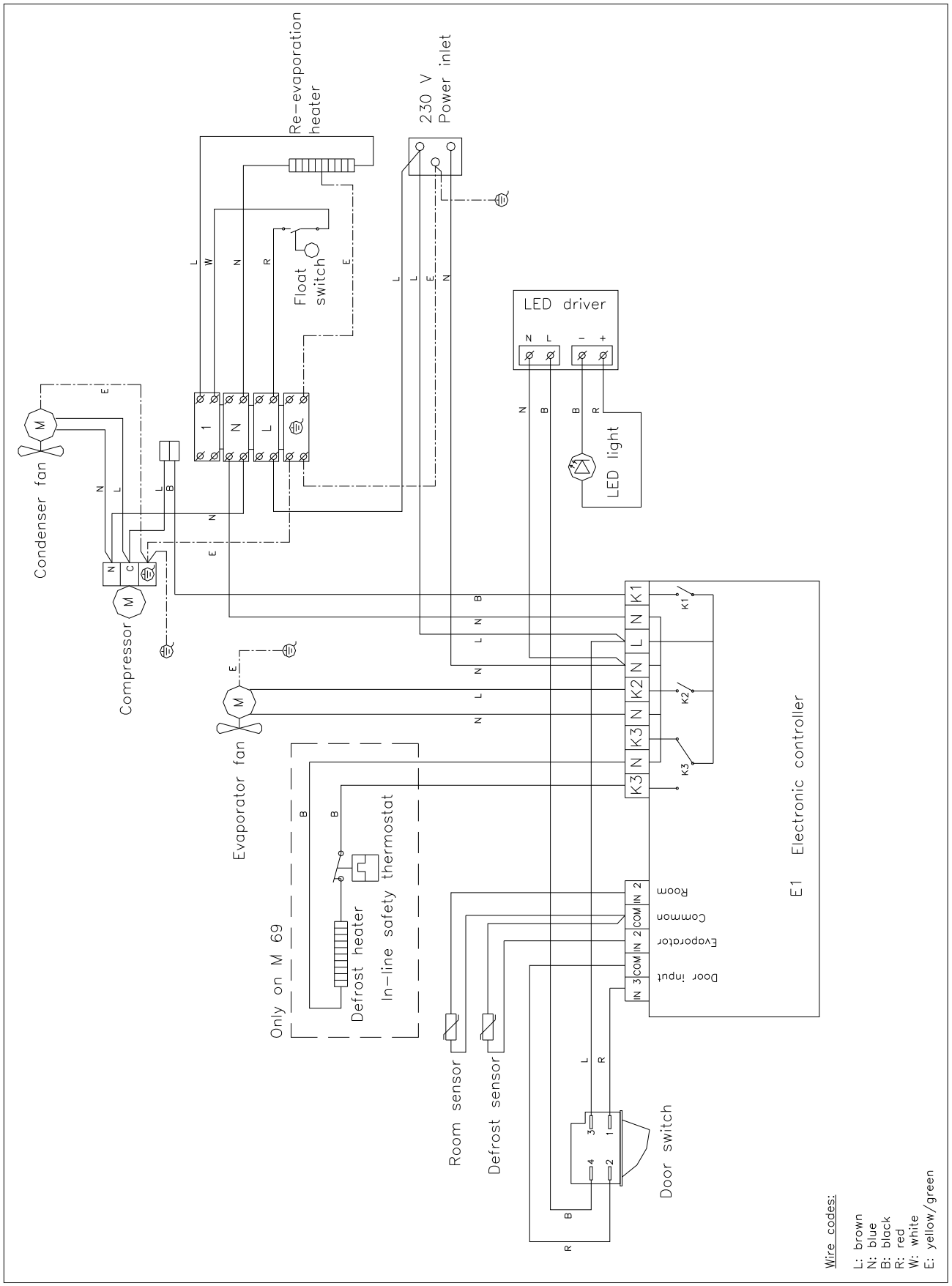

Wiring diagram Standard Plus F

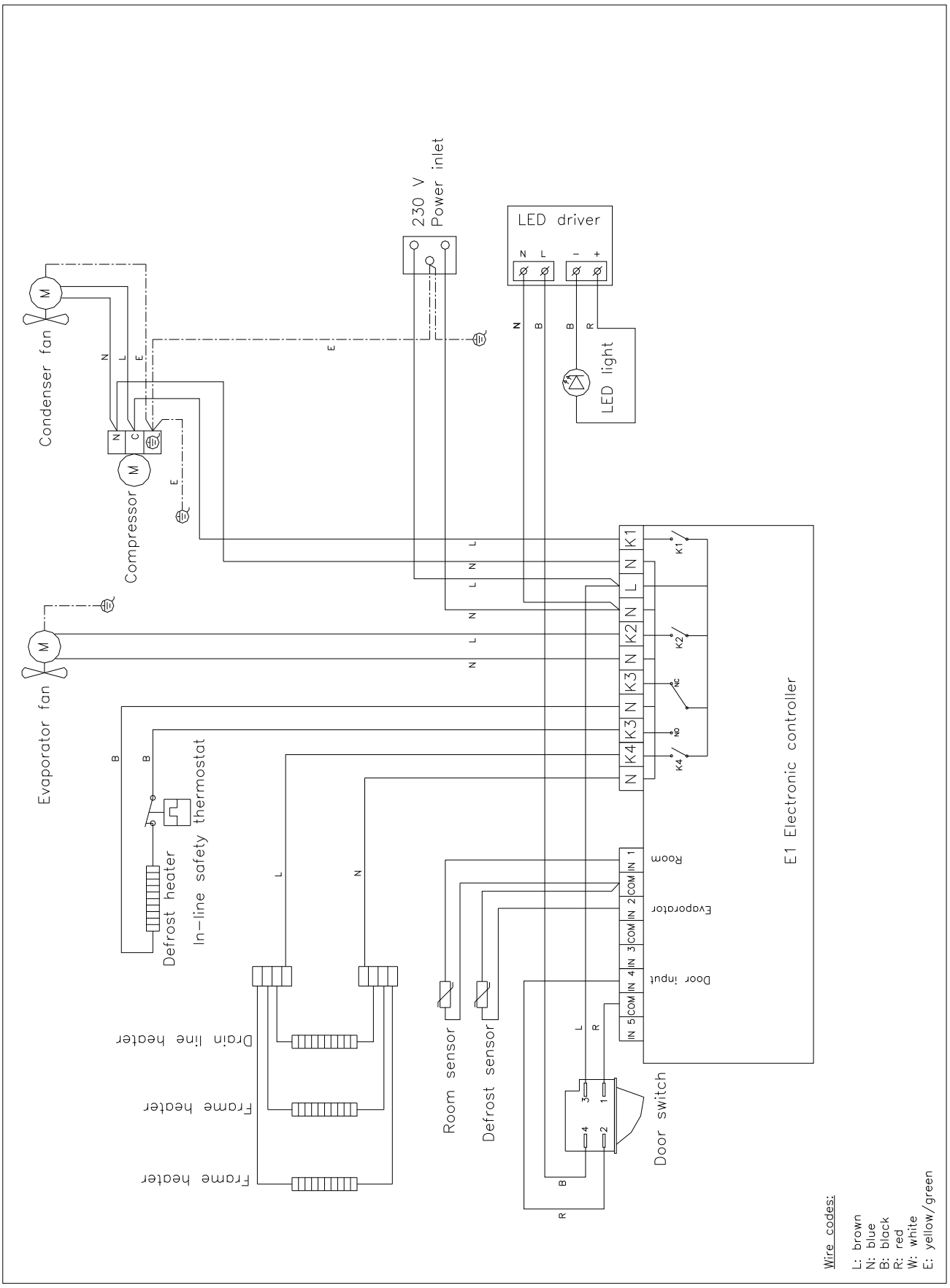

Piping diagram

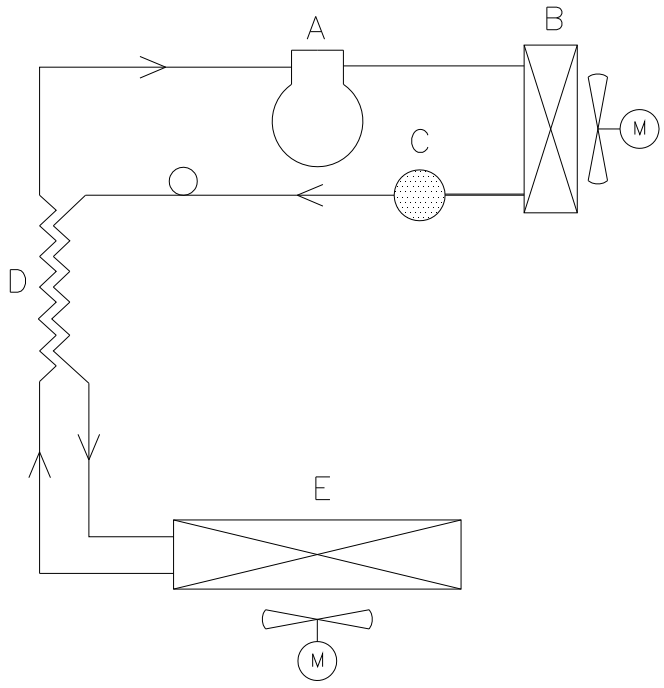

	DK	GB	D
A	Kompressor	Compressor	Kompressor
B	Kondensator	Condenser	Verflüssiger
C	Tørrefilter	Filter drier	Trockenfilter
D	Varmeudveksler	Heat exchanger	Wärmeaustauscher
E	Fordamper	Evaporator	Verdampfer