Criterion™

User's Manual

3.1 Cu.Ft. Compact Refrigerator

MODEL: CCR312DCE1B

BEFORE USING YOUR PRODUCT: Please read this manual carefully & follow all safety rules & operating instructions. Keep this manual for future reference.



INSTALLATION

Location

When selecting a position for your unit you should make sure the floor is flat and firm, and the room is well ventilated with an average room temperature of between 16°C and 32°C. Avoid locating your unit near a heat source, e.g. cooker, boiler or radiator. Also avoid direct sunlight as it may increase the electrical consumption. Extreme cold ambient temperatures may also cause the unit not to perform properly. This unit is not designed for use in a garage or outdoor installation. Do not drape the unit with any covering.

When installing the unit, ensure that 100 mm of free space is left at both sides, 100 mm at the rear and 300 mm at the top of the unit. The door can be opened to the right or the left, depending on what better suits the location. Please ensure there is adequate space for the door to fully open.

⚠

- If you want to have the door swing reversed, we recommend that you contact a qualified technician. You should only try to reverse the door yourself if you believe that you are qualified to do so.
- All parts removed must be saved to do the reinstallation of the door. You should rest the unit on something solid so that it will not slip during the door change process. Do not lay the unit flat as this may damage the coolant system. Ensure the unit is unplugged and empty.

Reversing the Door Swing

Tools required: Phillips style screwdriver / Flat bladed screwdriver / Hexagonal spanner

⚠

- Ensure the unit is unplugged and empty.
- Adjust the two levelling feet to their highest position.
- To take the door off it is necessary to tilt the unit backwards. You should rest the unit on something solid so that it will not slip during the door reversing process.
- All parts removed must be saved to do the reinstallation of the door.
- Do not lay the unit flat as this may damage the coolant system.
- We recommend that 2 people handle the unit during assembly.

1. Tilt the unit slightly towards the rear and prop it securely. Two people are required to tilt the unit during the door reversal process.

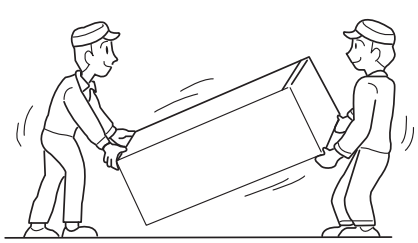

INSTALLATION

2. Remove the top right hinge cover.

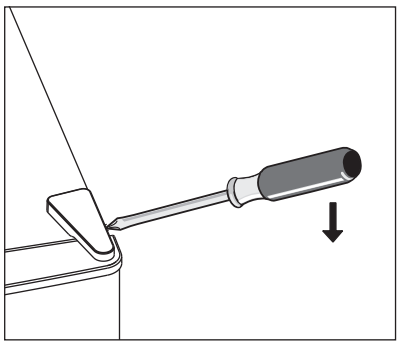

3. Undo the screws. Then remove the hinge bracket.

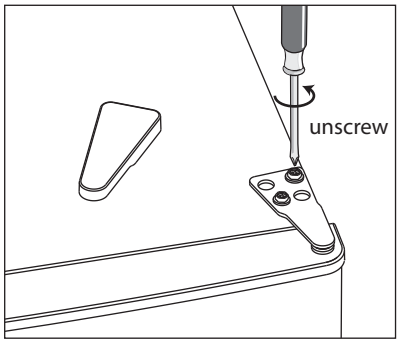

4. Remove the top left screw cover.

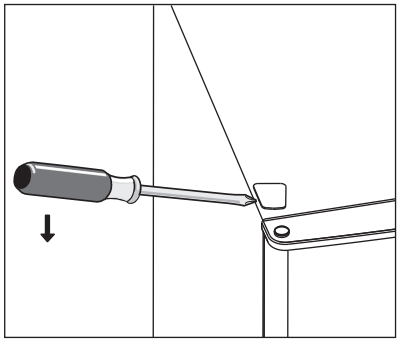

5. Move the core cover from left side to right side. And then lift the upper door and place it on a padded surface to prevent it from scratching.

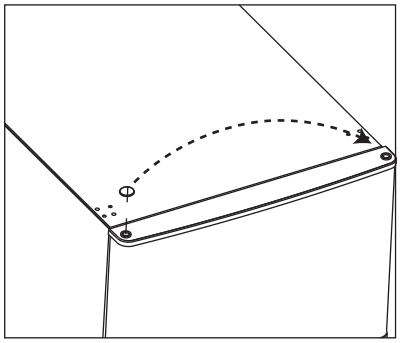

INSTALLATION

6. Take off the middle hinge by removing the screws. And then lift the lower door and place it on a padded surface to prevent it from scratching.

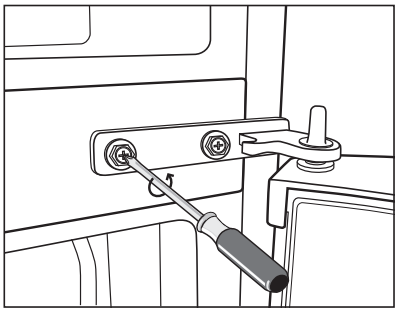

7. Remove the screws' covers and place them to the opposite side.

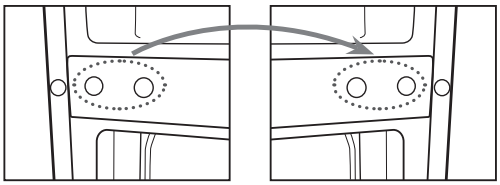

8. Remove the screws and bottom hinge. Then remove the adjustable feet from both side.

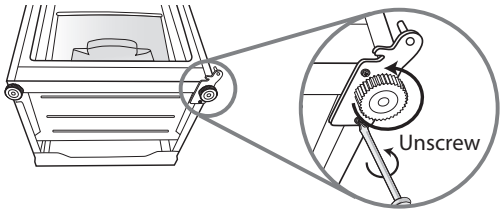

9. Unscrew and remove the bottom hinge pin, turn the bracket over and replace it.

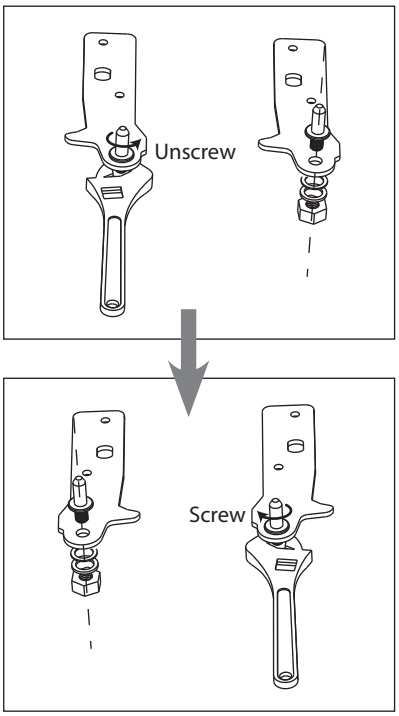

INSTALLATION

10. Refit the bracket fitting the bottom hinge pin. Replace both adjustable feet. Transfer the lower door to the property position.

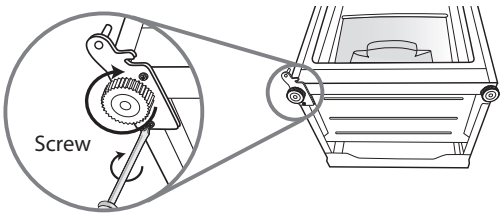

11. Move the hinge hole cover of lower door from left side to right side.

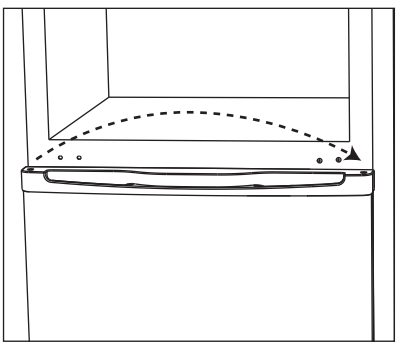

12. Make the middle hinge reverse the direction 180°C, then transfer it to the left property position. Make the middle hinge pin in the upper hole of the lower door, then tight the bolts.

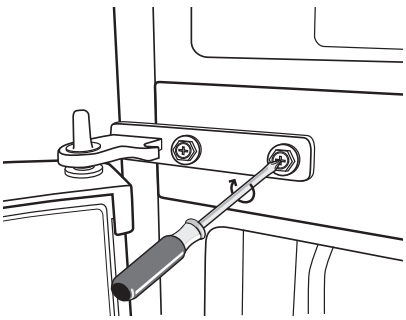

⚠

Ensure the freezer door is aligned horizontally and vertically, so that the seals are closed on all sides before finally tightening the hinge.

13. Place the upper door back on. Ensure the fridge door is aligned horizontally and vertically so that the seals are closed on all sides before finally tightening the top hinge.
14. Insert the hinge bracket and screw it to the top of the unit.
15. Use a spanner to tighten it if necessary.

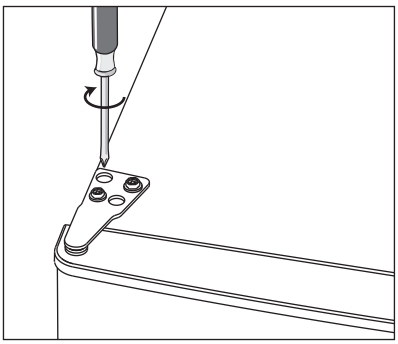

16. Put the hinge cover and the screw cover back.

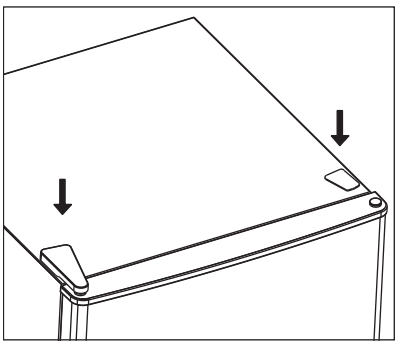

17. With the doors closed, check that the doors are aligned horizontally and vertically and that the seals are closed on all sides before finally tightening the bottom hinge. Re-adjust the levelling feet as needed.

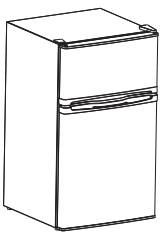

Levelling the Unit

To do this adjust the two levelling feet at the front of the unit.

If the unit is not level, the doors and magnetic seal alignments will not be covered properly.

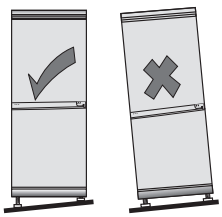

Cleaning Before Use

Wipe the inside of the unit with a weak solution of bicarbonate soda. Then rinse with warm water using a 'wrung-out' sponge or cloth. Wipe completely dry before replacing the shelves and salad bin. Clean the exterior of the unit with a damp cloth.

If you require more information refer to the **Cleaning** section.

- **Before Plugging in YOU MUST**
  Check that you have a socket which is compatible with the plug supplied with the unit.
- **Before Turning On!**
  Do not turn on until two hours after moving the unit. The coolant fluid needs time to settle.

Before Using Your Unit

Before placing any food in your unit, turn it on and wait for 24 hours, to make sure it is working properly and to allow it time to fall to the correct temperature. Your unit should not be overfilled.

Interior Accessories

Various glass or plastic storage shelves are included with your appliance – different models have different combinations.

You should always slide one of the full size glass storage shelves into the lowest set of guides, above the fruit and vegetable containers, and keep it in this position. To do this, pull the storage shelf forward until it can be swivelled upwards or downwards and removed.

Please do the same in reverse to insert the shelf at a different height.

In order to make the most of the volume of the fresh food storage compartment and frozen-food storage compartment, the user can remove one or more shelves, drawers, out of the appliance, according to your daily use.

Product Overview

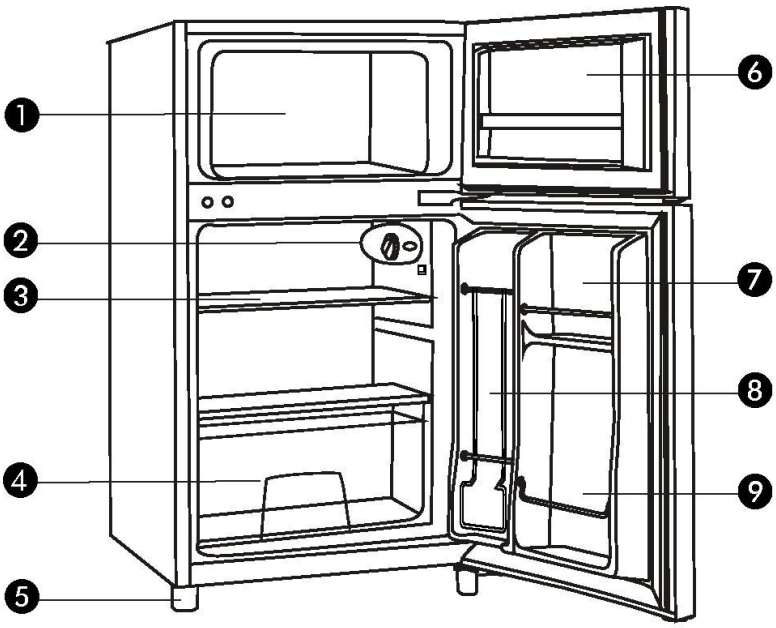

① Freezer Compartment
② Temperature Control (with integrated Interior light assembly)
③ Wire Shelf
④ Crisper with Glass Cover
⑤ Leveling Leg
⑥ Freezer Door
⑦ Refrigerator Door
⑧ Can Rack
⑨ 2-Liter Bottle Bin

Operation

Switching On Your Unit

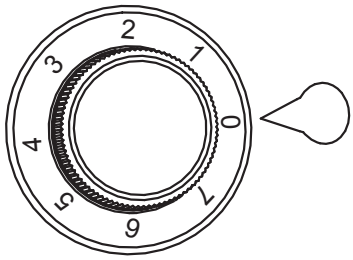

1. Connect the mains cable to the mains socket. The internal temperature of your unit is controlled by a thermostat. There are eight settings, of which position **7** is the coldest and position **0** turns the unit off.
2. Adjust the thermostat control dial to the desired position, bear in mind that the higher the number, the lower the temperature. Position **3** or **4** is the recommended setting when operating at normal room temperature.
3. The unit may not operate at the correct temperature if it is in a particularly hot or a particularly cold room, or if you open the doors often.
4. To ensure that the unit is cool enough to sufficiently chill and freeze your food, wait 24 hours before filling it with food.

Adjusting the Temperature

The internal temperature of the unit is controlled by a thermostat. The recommended position is between **1** to **4** for colder working environments (i.e. during winter) and between **5** to **7** for hotter environments. Please adjust according to the environment.

Noises Inside the Unit!

You may notice that your unit makes some unusual noises. Most of these are perfectly normal, but you should be aware of them!

These noises are caused by the circulation of the refrigerant liquid in the cooling system. It has become more pronounced since the introduction of CFC free gases. This is not a fault and will not affect the performance of your unit. This is the compressor motor working, as it pumps the refrigerant around the system.

Shopping for Chilled Foods

- Take a quick look at the chilled food package and make sure it is in perfect condition.
- Try to keep chilled food together whilst shopping and on the journey home as this will help to keep the food cold.
- Don't buy chilled food unless you can chill it straight away. Specially insulated bags can be bought from most supermarkets and hardware shops. These bags can keep chilled food cold for longer while transporting.
- Food that has been left in a car or at room temperature for a prolonged period of time could raise the food temperature to a dangerous level, which allows harmful bacteria to grow.
- Always unpack and place chilled food in the unit before storing dry food.

Tips for Keeping Food in the Unit

- Cooked meats/fishes should always be stored on a shelf above raw meats/fishes to avoid bacterial transfer. Keep raw meats/fishes in a container which is large enough to collect juices and cover it properly. Place the container on the lowest shelf at the bottom of the fridge compartment.
- Leave space around your food, to allow air to circulate inside the compartments. Ensure all parts of the unit are kept cool.
- To prevent transfer of flavours and drying out, pack or cover the food separately. Fruit and vegetables do not need to be wrapped.
- Always let pre-cooked food cool down before you put in the unit. This will help to maintain the internal temperature of the unit.
- To prevent cold air escaping from the unit, try to limit the number of times you open the doors. We recommend that you only open the doors when you need to put food in or take food out.

Shopping for Frozen Foods

- When you are buying frozen food, check the storage guidelines on the packaging. You will be able to store each item of frozen food for the period shown against the 4-star rating. This is usually the period stated as "Best before" on the front of the packaging. The maximum freezing capacity of this freezer is 2.0kg in 24 hours. Do not place fresh food into the freezer compartment with combined weight that exceeds 2.0kg.
- Check the temperature of the frozen food cabinet in the shop where you buy your frozen foods. It should show a temperature lower than -18°C.
- Take a quick look at the frozen food package and make sure it is in perfect condition.
- Always buy frozen products last on your shopping trip or visit to the supermarket. Try to keep frozen food together whilst shopping and on the journey home as this will help to keep the food frozen.
- Don't buy frozen food unless you can freeze it straight away. Specially insulated bags can be bought from most supermarkets and hardware shops. These bags can keep frozen food frozen longer.

Preparations for Freezing

- Use quality food and handle it as little as possible. Freeze food in small quantities as it freezes faster, takes less time to defrost and enables you to control the quantity you need better.
- Leave cooked food to cool completely. Chill food before freezing if possible.
- Consider how you will want to cook the food before freezing it.
- Don't freeze food in metal containers if you may want to microwave it straight from the freezer.
- Use special freezer bags, freezer film, polythene bags, plastic containers, and aluminium foil (heavy duty grade only). If in doubt, double wrap your food. Don't use aluminium foil for acidic foods, e.g. citrus fruits. Don't use thin cling film, glass, or used food containers without cleaning.
- Exclude as much air from the container as possible. You could buy a special vacuum pump which sucks excessive air out of the packaging.
- Leave a small amount of air space when freezing liquids to allow expansion.
- You can use the space in the freezer most efficiently if you freeze liquids (or solids with liquids, e.g. stew) in square blocks. This is known as "Preforming". Pour the liquid into a polythene bag which is inside a square sided container. Freeze it, and then remove it from the container and seal the bag.

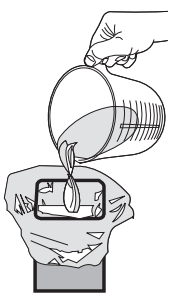

- Label your frozen foods as they will look the same when in frozen state. Use special fridge freezer tapes, labels and pens with different colours. This allows you to easily organise and to effectively use the freezer. Write the contents and date; otherwise the frozen food might exceed the storage time and this could cause food poisoning. Please refer to your food packaging for the recommended storage time.
- You may also add the weight and cooking notes, e.g. "defrost first", "cook from frozen" and keep a separate log of what is in each drawer. This will save opening the door and searching around unnecessarily.

Defrosting Frozen Food

1. Take the frozen food out from the freezer compartment and uncover the frozen food. Let it defrost at room temperature. Don't forget that defrosting in a warm area encourages the growth of bacteria and low temperature cooking may not destroy dangerous bacteria.
2. Drain off and throw away any liquid lost during defrosting.
3. Always make sure there are no ice-crystals in the food before cooking, particularly with meat. These crystals indicate that the food has not fully defrosted.
4. Cook food as soon as possible after defrosting.
5. Many microwaves and ovens have a defrost setting. To avoid bacterial build up, only use these if you intend to cook the food immediately afterwards.



Never refreeze anything that has been defrosted out unless you cook it again, to kill off harmful bacteria. Never re-freeze defrosted shellfish. Re-seal packs properly after removing items. This prevents drying or freezer-burn and a build up of frost on any remaining food.

Cleaning

Defrosting

Frost might build up in the freezer compartment after it has been used for a period of time. Scrape away the frost using a plastic scraper (not included).

> ⚠ Do not use a metal or sharp instrument to scrape away the frost, nor should you use any electrical appliances to aid defrosting.

We recommend that defrosting should be carried out when the frost layer builds up to 10mm (~0.39”). Choose a time when the stock of frozen food is low, follow these procedures:

1. Take out the food, turn the unit off at the mains supply and leave the door open. Ideally, the frozen food should be put into another freezer. If this is not possible, wrap the food in several sheets of newspaper or large towels and then a thick rug or blanket to keep it cool.
2. Place a shallow bowl or pan below the freezer compartment. Scrape away the frost using the plastic scraper. Defrosting the remaining frost can be speeded up by placing a bowl of hot water inside the freezer compartment cabinet and closing the door. As the solid frost loosens, scrape it away with the plastic scraper and remove.



3. When defrosting is complete, clean your unit’s interior and exterior.

Cleaning the Interior and the Exterior of the Unit

- Remove all the shelves and salad bin before cleaning. To remove the salad bin first remove the lower fridge door shelf.
- Wipe the inside of the unit with a weak solution of bicarbonate soda and then rinse with warm water using a ‘wrung-out’ sponge or cloth. Wipe completely dry before replacing the shelves and salad bin.
- Use a damp cloth to clean the exterior, and then wipe with a standard furniture polish. Make sure that the doors are closed to avoid the polish getting on the magnetic door seals or inside the fridge/freezer compartments.
- The grille of the condenser at the back of the unit and the adjacent components can be vacuumed using a soft brush attachment.

Cleaning Tips

Condensation may appear on the outside of the unit. This maybe due to a change in room temperature. Wipe off any moisture residue. If the problem continues, please contact a qualified technician for assistance.

Maintenance

Changing the Internal Light

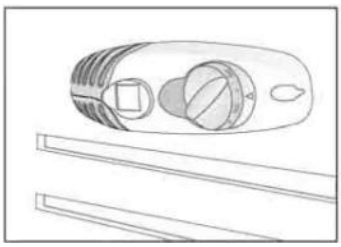

1. Before carrying out the bulb replacement always adjust the thermostat control dial to Position **0**, then disconnect the mains supply.
2. Use a flat bladed screwdriver and gently prise off the light bulb cover.
3. Remove the old bulb by unscrewing in an anti-clockwise direction.
4. Replace with a new bulb (10W).
5. Refit the light bulb cover and reconnect the unit to the mains supply and switch on by adjusting the thermostat.

Care When Handling / Moving the Unit

Hold the unit around its sides or base when moving it. Under no circumstances should it be lifted by holding the edges of the top surface.

Servicing

The unit should be serviced by an authorised engineer and only genuine spare parts should be used. Under no circumstances should you attempt to repair the unit yourself. Repairs carried out by inexperienced persons may cause injury or serious malfunction. Contact a qualified technician.

Switching Off for Long Periods of Time

When the unit is not in use for a long period of time, disconnect it from the mains supply, empty all food and clean the unit, leaving the door ajar to prevent unpleasant smells.

Disposal

Old units still have some residual value. An environmentally friendly method of disposal will ensure that valuable raw materials can be recovered and used again. The refrigerant used in the unit and insulation materials require special disposal procedures. Ensure that none of the pipes on the back of the unit are damaged prior to disposal.

Up to date information concerning options of disposing of your old unit and packaging from the new one can be obtained from your local council office.

When disposing of an old unit break off any old locks or latches and remove the doors as a safeguard.

Safety Warnings

For your continued safety and to reduce the risk of injury or electric shock, please follow all the safety precautions listed below.

- Read all instructions carefully before using the unit and keep them for future reference.
- Retain the manual. If you pass the unit onto a third party, make sure to include this manual.
- Keep ventilation openings in the unit enclosure clear of obstructions.
- Do not use mechanical devices or other means to accelerate the defrosting process, other than those recommended by the manufacturer.
- Do not use electrical appliances inside the food storage compartments of the unit, unless they are of the type recommended by the manufacturer.
- If the mains cable is damaged, it must be replaced by the manufacturer, its service agent or a qualified technician in order to avoid a hazard.
- Choose a location for your unit away from heat sources such as radiators or fires as refrigerant and vesicant are burnable.
- Young children should be supervised to ensure that they do not play with the unit.
- Do not damage the refrigerant circuit (applicable only for appliances with refrigeration circuits which are accessible to the user).
- The unit must be maneuvered by a minimum of 2 persons.
- This unit is not intended for use by persons (including children) with reduced sensory or mental capabilities, or lack of experience and knowledge unless they have been given supervision or instructions concerning the use of the unit by a person responsible for their safety.
- If your unit is fitted with a lock to prevent children being trapped inside, keep the key out of reach and not in the vicinity of the unit.
- Do not store volatile or flammable substances in the unit.
- Do not store bottles or glass containers in the freezer compartment. Contents can expand when frozen (fizzy drinks) which may break the bottle and damage your freezer compartment.

WARNING



IT IS HAZARDOUS FOR ANYONE OTHER THAN AUTHORISED SERVICE PERSONNEL TO CARRY OUT SERVICING OF REPAIRS WHICH INVOLVE THE REMOVAL OF COVERS.



TO AVOID THE RISK OF AN ELECTRICAL SHOCK DO NOT ATTEMPT REPAIRS YOURSELF.