K56300NEBU COMBI

PRODUCT SERVICE MANUAL

PRODUCTION CODE-SALES CODE EXPLANATIONS

Product codes mentioned in the Service Manual indicate the standard engineering model codes of Arçelik A.Ş.

Accordingly, model code description is as below:

- **K56300NEBU:** It is a two-door, Full No-Frost Combi type sheet-metal-door refrigerator model with 55.6 cm width, 300 l gross volume and is controlled from the electronic top trim on the body.

  In the field: K56300NEBU : BRFB1050FFBI Blomberg (7281045518)

Service Manual Revisions

Revision No.	Explanation

Contents

1 SAFETY WARNINGS 4

2 TECHNICAL SPECIFICATIONS 6

2.1 K56300NEB Product Introduction 6

3 INSTALLATION 8

3.1 Handling Instructions 8

3.2 Installation Instructions 8

3.3 Floor Balance Adjustment 8

4 DOOR GROUPS ASSEMBLY/DISASSEMBLY INSTRUCTIONS 10

4.1 Assembly / Disassembly Works for Upper Door Hinge Cover 10

4.2 Removing the Door 10

4.3 Removing the Magnet Cover on the Upper Side of the Door 11

4.4 Removing Display Indicator Group 11

4.5 Changing The Door Opening Direction 13

5 PRODUCT ASSEMBLY/DISASSEMBLY INSTRUCTIONS IN COOLER COMPARTMENT 16

5.1 Replacement of the Fridge Compartment Illumination Group 16

5.2 Removing the Sensor Cover 16

5.3 Removing the Sliding Crisper Rails 17

5.4 Assembly/Disassembly of Crisper Covers of the Fridge Compartment 17

5.5 Assembly/Disassembly of Evaporator Cover Group 18

6 DONDURUCU BÖLMEDEKİ PARÇALARIN MONTAJ/DEMONTAJ ÇALIŞMALARI 19

6.1 Evaporatör Kapağının Montaj/Demontaj Çalışmaları (No-Frost (GKN) Modeller) 19

6.2 Soket Kutusu Kapağının Çıkartılması (No-Frost (GKN) Modeller) 20

6.3 Fan grubu Montaj/Demontaj çalışmaları (No-Frost (GKN) Modeller) 20

6.4 Termal Sigortanın Çıkartılması (No-Frost (GKN) Modeller) . **Hata! Yer işareti tanımlanmamış.**

6.5 Sensör'ün çıkartılması (No-Frost (GKN) Modeller) ..... **Hata! Yer işareti tanımlanmamış.**

6.6 Frz Drain Isıtıcısının Çıkartılması (No-Frost (GKN) Modeller) ..... **Hata! Yer işareti tanımlanmamış.**

6.7 Çekmece Gruplarının Demontaj/ montajı ..... **Hata! Yer işareti tanımlanmamış.**

7 ASSEMBLY/DISASSEMBLY OF CONTROL BOARD ..... **Hata! Yer işareti tanımlanmamış.**

7.1 Removing Card Box 24

7.2 Removing the Main Board 24

8 DISASSEMBLY OF HINGES ..... **Hata! Yer işareti tanımlanmamış.**

8.1 Removing the Hinges ..... **Hata! Yer işareti tanımlanmamış.**

9 ASSEMBLY/DISASSEMBLY OF PARTS ON THE COMPRESSOR SECTION .....**Hata! Yer işareti tanımlanmamış.**
9.1 Removing the Evaporator Container.....**Hata! Yer işareti tanımlanmamış.**
9.2 Removing the Terminal Box Cover 25
9.3 Disassembly of Run Capacitor 26
9.4 Removing the Filter Box 26
9.5 Removing the Thermal Relay Group 26
10 EXPLANATION OF ELECTRICAL SYSTEM ELEMENTS.....**Hata! Yer işareti tanımlanmamış.**
10.1 List of Critical Components..... 28
10.2 Compressor 28
10.3 Freezer Fan Motor..... 29
10.4 Sensor Characteristics 29
10.5 FF sensor (Fridge Compartment Sensor).....**Hata! Yer işareti tanımlanmamış.**
10.6 Thermic.....**Hata! Yer işareti tanımlanmamış.**
10.7 PTC relay.....**Hata! Yer işareti tanımlanmamış.**
10.8 Reed Sensor.....**Hata! Yer işareti tanımlanmamış.**
10.9 FF Illumination..... 31
10.10 Electronic Control Board 31
10.11 EK3 BOARD 32
10.12 Display .....**Hata! Yer işareti tanımlanmamış.**
11 REFRIGERATOR OPERATION PRINCIPLE .....**Hata! Yer işareti tanımlanmamış.**
11.1 FF Defrost .....**Hata! Yer işareti tanımlanmamış.**
11.2 Compressor .....**Hata! Yer işareti tanımlanmamış.**
11.3 Quick Cool.....**Hata! Yer işareti tanımlanmamış.**
12 SERVICE and DEALER MODE.....**Hata! Yer işareti tanımlanmamış.**
12.1 Service Test.....**Hata! Yer işareti tanımlanmamış.**
12.2 Dealer Mode.....**Hata! Yer işareti tanımlanmamış.**
13 ERROR CODES.....**Hata! Yer işareti tanımlanmamış.**
14 DISPLAY TROUBLESHOOTING MANUAL .....**Hata! Yer işareti tanımlanmamış.**
15 ELECTRICAL CIRCUIT AND GAS FLOW DIAGRAM..... 47
16 TROUBLESHOOTING AND FAILURE IDENTIFICATION 49
17 EXPLODED PICTURES .....**Hata! Yer işareti tanımlanmamış.**
17.1.A Door Accessories Pack..... 53
17.1.B Body Accessories Pack..... 54

17.1.C Customer Pack 55
17.1.D Compressor Pack 56
17.1.E Completely Packaged Refrigerator Pack 57

1 SAFETY WARNINGS

• Never use the parts of the refrigerator such as kick plate or door as a means of support or step.

• Do not damage the parts, where the refrigerant is circulating, with drilling or cutting tools. The refrigerant that might blow out when the gas channels of the evaporator, pipe extensions or surface coatings of the product are punctured may cause skin irritations and eye injuries.

• In case of any failure or during a maintenance or repair work, disconnect your refrigerator's mains supply by either turning off the relevant fuse or unplugging your appliance.

• Be careful not to pull by the cable when pulling the plug out.

• DO NOT PLUG IN your appliance before removing all packaging materials and protective transport elements.

• To prevent horizontal handling and in order to ensure complete distribution of the condenser oil, keep the appliance in upright position for 4 hours before operating.

• Make sure that the plug is easily accessible. Do not use multi sockets or extension cables.

• Do not allow blocking of ventilation openings in the product casing or in the built-in structure.

• Before plugging in the product, make sure that the voltage and frequency values printed on the product rating plate in your appliance conform to the values of the supply power in your house. This rating plate is on the inner left wall of the refrigerator.

• We recommend plugging in this product to a socket which is properly switched and fused. The plug of the appliance should be located as to be easily accessible.

• **Warning!** The product must always be plugged into a grounded socket.

• ESD precautions should be taken for operations on electrical components.

• Use protective gloves for work safety reasons during assembly/disassembly operations.

• If the molded plug at the end of the power cable of the product does not match with the socket, the plug must be cut and replaced by a suitable one.

• Dispose of the plug you have cut since a plug with naked cable can cause electric shock

when plugged in another socket in the house.

Important! Attaching a different plug

As the colors of the wires in the power cable of the appliance might not match with the color codes defining the terminals in your plug, proceed as follows:

1. Attach the green-yellow or green colored wire (Ground) to the terminal on the plug marked with ‘E’ sign, ⏚ symbol or which has green and yellow or only green color.

2. Attach the blue (Neutral) wire to the terminal on the plug which is marked with ‘N’ or is in black color.

3. Attach the brown (Phase) wire to the terminal on the plug which is marked with ‘L’ or is in red color. In alternative plugs, a 13-Ampere fuse must be attached to the plug or the adaptor in the mains plug box.

2 TECHNICAL SPECIFICATIONS

2.1 K56300NEBU Product Introduction

2.1.1 Product Definition:

Producer	: ARÇELİK A.Ş.
Model	: K56300NEB
Type	: Full No-Frost Refrigerator

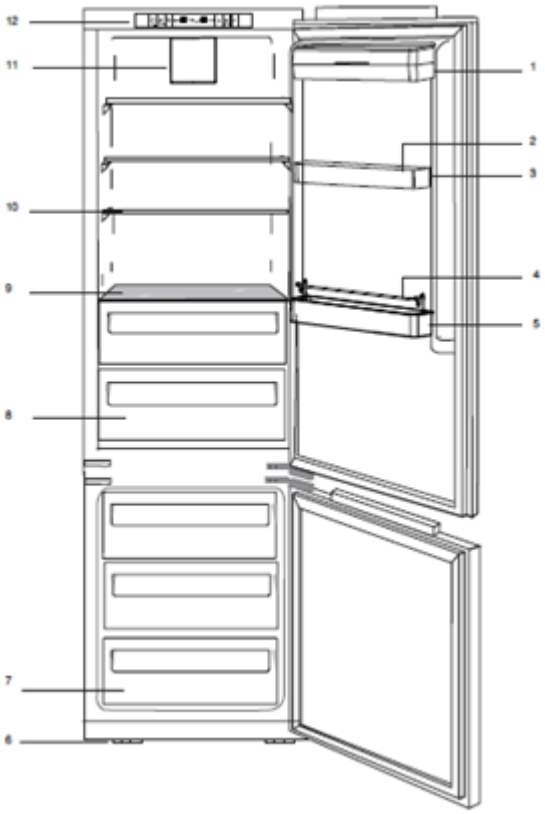

1- BUTTER & CHEESE SECTIONS
2- EGG TRAY
3- DOOR SHELF
4- BOTTLE HOLDER
5- BOTTLE SHELF
6- ADJUSTABLE FEET
7- FREEZER
8- CRISPER
9- CRISPER COVER and GLASS
10- ADJUSTABLE SHELVES
11- FAN (* For Full No-Frost modeller)
12- CONTROL PANEL - DISPLAY

2.1.2 Dimensions:

Height (mm)	: 1775
Width (mm)	: 556
Depth (mm)	: 545

2.1.3 Package:

Material	: Corrugated Cardboard
Dimensions	
Height (mm)	: 1853
Width (mm)	: 597
Depth (mm)	: 597

2.1.4 Weight:

Unpackaged (kg)	: 75
Packaged (kg)	: 79,1

2.1.5 Volume:

Total volume (gross) (l)	: 300
Total volume (net) (l)	: 254
Fridge (net) (l)	: 125
Biofresh (net) (l)	: 52
Freezer (net) (l)	: 67

3 INSTALLATION

3.1 Handling Instructions

- This appliance should be transported only in upright position. Delivery package should not be damaged during transportation.
- If the appliance is to be transported in horizontal position, it should only be leaned towards right-hand side when you are facing the front of the appliance. After bringing it to upright position, it should be left for at least 4 hours without being operated in order to have it settled.
- Failure to obey above instructions may result in damage on the appliance. In case of failure to obey these instructions, producer shall not be held responsible.
- The appliance must be protected against rain, humidity and other atmospheric effects.
- Pay attention not to damage your floor, the pipes, wall coverings and etc., when installing your appliance. The appliance should not be carried by pulling from the door or door handle.
- Discharge the water in the drain tray before moving the appliance. For detailed information, see “Cleaning and Maintenance” section in the operation manual.

Do not sit or climb on to the appliance since the design of the appliance is not suitable for such actions. You may injure yourself or damage the appliance.

IMPORTANT! To prevent cutting or damaging the power cable, make sure that the cable is not pinched under the appliance during and after moving it.

3.2 Installation Instructions

- Installation manual for the appliance is uploaded to “Manusoft” individually.

3.3 Floor Balance Adjustment

If your refrigerator is unbalanced;

You can balance your refrigerator by turning the front legs of it as illustrated in the figure. The corner where the leg exists is lowered when you turn in the direction of black arrow and raised when you turn in the opposite direction. Taking help from someone to slightly lift the refrigerator will facilitate this process.

NOTE: There are 4 adjustable feet on the product, the height adjustment of 4 corners can be made with these feet

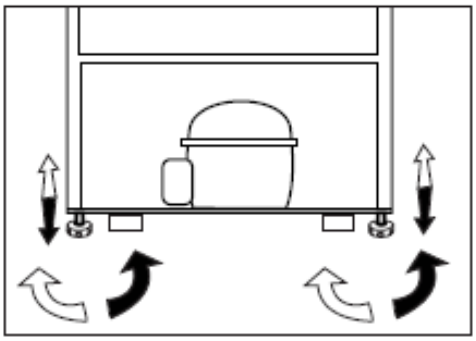

4 DOOR GROUPS ASSEMBLY/DISASSEMBLY INSTRUCTIONS

4.1 Assembly / Disassembly Works for Upper Door Hinge Cover

Hinge cover is secured on the hinge body by locking without using a screw. To remove, lift the hinge cover with a flat tipped screwdriver and pull out the cover slightly towards you.




In order to re-install the hinge cover, place the cover on the area next to the indicator again and lock it by forcing forward.





4.2 Removing the Door

To remove the upper door, firstly remove the hinge cover as described in step 4.1. Then, remove the 2 screws retaining the upper hinge to the door respectively using a **Torque bit**. Also, remove the 2 screws securing the lower hinge to the door. Remove the door by sliding it on the surfaces where it is secured on the hinges.







4.3 Removing the Magnet Cover on the Upper Side of the Door

There is a magnet inside the upper cover placed on the door. This upper cover is secured to the door with two tabs without using a screw. To remove this cover, release the cover from the locks over the gapped areas on the door with a flat-tip screwdriver and take it out by pulling it upwards.



Installation of this cover is performed by installing the cover from upwards and locking by applying a little force downwards.



4.4 Removing Display Indicator Group

Remove the hinge cover first in order to remove the display indicator group. (This procedure is described in step 4.1). Then, remove the side connecting cover on the opposite side by flexing it with a screwdriver from the lower side. Two screws securing the display have to be removed after removing the hinge cover. These two screws are removed by using **star bit**. Tab connections are cut from the upper surface with a flat-tip screwdriver in order to release the display group from the tabs and this procedure is applied throughout the upper surface of the display. Then the display group whose tab connections are cut is released from

the housing by pulling it outwards. The socket connections shall be removed to complete the dismantling process of the display group.



Display indicator group is installed as follows. First, socket connection is made. Then, the display group is so positioned that the the tabs are engaged in the housing on the upper front plate. It is seated in the housing by applying a force forwards, and secured with two screws. Then, the hinge cover is installed to the hinge side and the side connection cover to the opposite side.

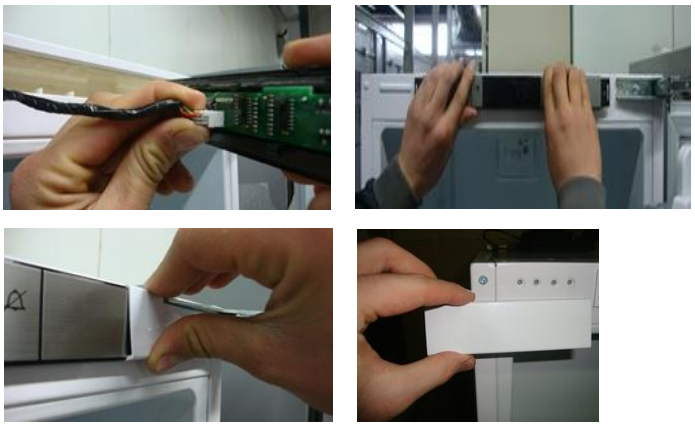

NOTE: ESD precautions should be taken during these operations !

4.5 Changing The Door Opening Direction

To change the direction of the door, remove the hinge cover first as described in step 4.1, then remove the side connection cover with a flat-tip screwdriver. Then upper and lower connection parts on the opening side should be removed; each part is secured with two screws.





Remove the cover of the lower connection part by flexing it forward with a screwdriver and sliding it back in the direction of arrow. Then, remove the lower connection part by removing the two screws just like the upper connection part.






Remove 2 screws each (4 in total) that secure the upper and lower hinges to the door, and separate the door by sliding it to sideways.









Remove H1 and H2 hinges. Secure the H1 hinge to the lower left side with two screws after reversing it when the door is adjusted to the left side. Remove the H2 hinge, too, and secure it to upper left side with two screws.

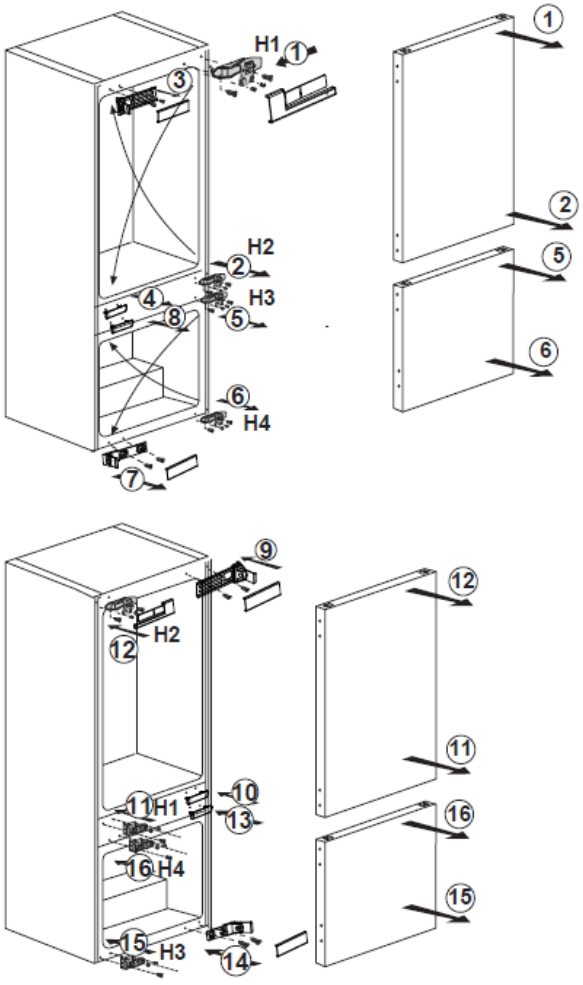

Place the door on the hinges. Connect the 2 hinges secured to the left side to the door with two screws each (4 in total) that were removed while the door was being removed. Thus, the operation for changing the direction of the door is completed.

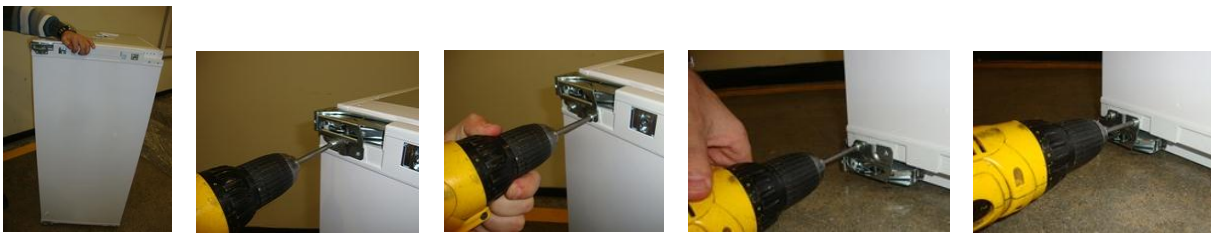

Secure upper connection part to upper right corner with two screws. Then, install the cover part.





Secure lower connection rubber to the lower right corner of the refrigerator with two screws. Then, lock it by sliding the cover.







Then, take the left hinge cover part from the installation kit with cardboard packing delivered with the product, and lock it on the hinge by applying a slight force with your hand.





5 PRODUCT ASSEMBLY/DISASSEMBLY INSTRUCTIONS

5.1 Replacement of the Fridge Compartment Illumination Group

Illumination group is serviced as a group. This group is fixed on the body by means of a single screw and pulling the group through the rails of another plastic part mounted on the top. Remove this screw with star tip, and take the illumination group out from its seat. The socket connection will be removed to complete the dismantling process of the group.

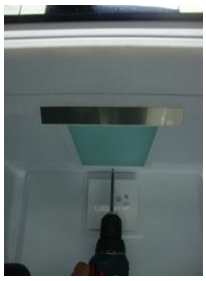






Perform the same procedure in the reverse order for the installation of this group.

NOTE: ESD precautions should be taken during these operations !

5.2 Removing the Sensor Cover

The sensor cover is secured with a tab connection. To remove it, the tab seen at the side will be pressed and the cover is pulled out to detach. The sensor part that is visible after the cover has been removed is serviceable.





5.3 Removing the Sliding Crisper Rails

Crisper compartments are available on 2 floors, and they slide on rails with 2 pieces each of the right and left. (There are 4 rails in total) You should take the crispers out to remove these rails, and remove 2 screws that secure each rail with star tip.




To re-install the rails, position the stud pins with 3 pieces each on the rails so that they are engaged to the holes in the body. Then, re-secure the rails by tightening 2 screws with star tip.

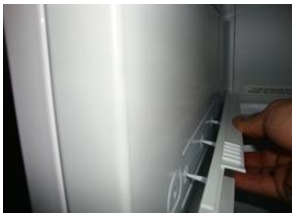



5.4 Assembly/Disassembly of Crisper Covers of the Fridge Compartment

Crisper groups used in our fridge compartment are serviced in two different ways, namely; their covers and drawer sections. The process of removing the drawer cover from the drawer body is performed in the order below:

The tab structures on the drawer cover are locked on the drawer body at the bottom part. The tabs are loosened from their places by using two thin and flat-tipped tools. There are four tabs

in total at the bottom part.



After loosening the bottom part, side parts will be handled. There are 2 tabs on the sides; one on the left and one on the right. The tabbed structure is in the drawer body. These tabs are snapped on the spaces on the drawer cover. To disconnect the tab connection, the tabs are removed from the housings they are placed by using a pointed and flat tool as shown in the picture.



To attach them, first the upper and side tabs are snapped to the drawer body, and then they can be mounted to the drawer body by snapping the tabs located at the bottom.

5.5 Assembly/Disassembly of Evaporator Cover in Fridge Compartment

Take the body glass shelves, 2 crispers and the biofresh tray on the crispers out first to remove the evaporator cover group. While the body glass shelves are removed by releasing them by raising them from the stopper on the rear, biofresh tray is released from the stopper by raising it from the rear first, and then sliding it towards us through the securing channel on side surfaces.



Evaporator cover group is removed and installed and serviced as a group with the built-in fan group. Evaporator cover group is secured with 4 screws, one on the upper side and one on the middle with 2 pins snapped to inner bodies on the lower left and right sides of the cover.

Take the plugs that close the screw tightening areas out first with a fine tipped screwdriver and remove 4 screws. Then, remove the pins snapped to the lower areas by pulling them towards us slightly by hand. The socket connection of the fan on the cover will be removed to complete the dismantling process of the evaporator cover group.



Perform the same procedure in the reverse order for the installation of the evaporator group.

6 ASSEMBLY/DISASSEMBLY WORKS FOR PARTS IN FREEZER COMPARTMENT

6.1 Assembly / Disassembly of the Evaporator Cover

In order to assemble the evaporator cover, two screws found in the bottom of the evaporator cover are loosened with the help of a Phillips screwdriver. Then the tabs of the evaporator cover are removed from slots in the body, and disassembly can be made by pulling the evaporator cover from the bottom.

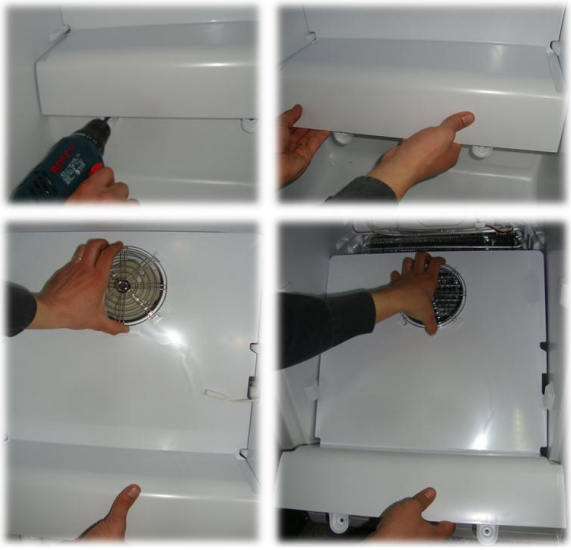

6.2 Removing the Socket Box Cover

Socket box cover is attached with only one screw. The cover can be removed by hand after removing this screw.



6.3 Assembly/Disassembly of the Fan Group

The Fan Group is attached on the inner body plastic by means of 2 screws. After removing the screw connections, the sockets related to the fan are removed from the socket box to complete the disassembly process of the fan group.



6.4 Removing the Thermal Fuse

The thermal fuse is snapped on the pipe on the evaporator assembly by means of a tab structure. The part can be removed by holding as shown in the picture.



6.5 Removing the Sensor

The grey-colored Sensor is contained in the evaporator group. It is connected on the evaporator pipe by means of a plastic clamp and an Aluminum strap. To remove it, the plastic clamp is cut by using a side cutter. The Al strap which fixes the Sensor on the Al pipe will be cut to remove the socket connection and complete the disassembly process.



6.6 Removing the Freezer Drain Heater

The heater part is adhered on the drain section. The cable connection is fitted on the evaporator pipe by means of a plastic clamp and the socket connection is made in the socket box.

To dismantle the heater, first the plastic clamp connections are cut by using a side cutter. Finned evaporator group is taken from the inner body rear wall and leant against the side wall. After seeing the drain section clearly, the heater part will be taken out by holding from the sticky part of it.



6.7 Assembly/Disassembly of the Drawer Groups

The drawer groups used in our freezer compartment are serviced in two different ways, namely; their covers and drawer sections. The process of removing the drawer cover from the drawer body is performed in the order below:

The tab structures on the drawer cover are locked on the drawer body at the bottom part. The tabs are loosened from their places by using two thin and flat-tipped tools. There are 4 tabs in total at the bottom part



After loosening the bottom part, side parts will be handled. There are 2 tabs on the sides; one on the left and one on the right. The tabbed structure is in the drawer body. These tabs are snapped on the spaces on the drawer cover. To disconnect the tab connection, the tabs are removed from the housings they are placed by using a pointed and flat tool as shown in the picture.



To attach them, first the upper and side tabs are snapped to the drawer body, and then they can be mounted to the drawer body by snapping the tabs located at the bottom.

7 ASSEMBLY/DISASSEMBLY OF CONTROL BOARD

7.1 Removing Card Box

Main board is on the compressor section of the refrigerator. To remove the board box, remove the single screw that secure the board box to the plate; this screw also serves as the grounding screw. Then, remove the 2 screws that secure the whole group to the product. Plate board cover is fixed to the board box with 4 tabs on sides. Flex the two tabs that lock the cover from one side with a flat-tipped screwdriver and remove the cover. The same procedure is repeated in the reverse order for reassembly



7.2 Removing the Main Board

S-1 and EK-3 boards are secured to the board box with two tabs each. Remove the connection sockets first, release the board from the tabs with a flat-tipped screwdriver and now you can remove the board by removing the board sockets. The same procedure is repeated reversely for mounting again.

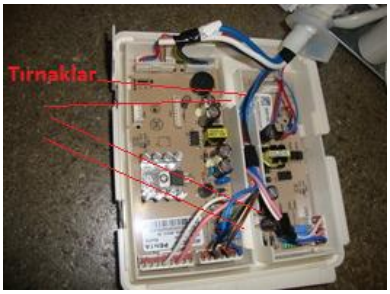

8 DISASSEMBLY OF HINGES

8.1 Removing Hinges

Remove 2 screws that secure the hinge to be disassembled to the door with a Torque gun first. Then, remove two screws that secure the hinge with a Torque gun, too. Thus, the hinge will be disassembled.



9 ASSEMBLY/DISASSEMBLY OF THE PARTS ON THE COMPRESSOR SECTION



9.1 Removing the Evaporator Container

Evaporation container is fixed with a snap-fit connection on the compressor. In order to remove it, it is required to pull evaporation container outwards forcibly

,

9.2 Removing the Terminal Box Cover

Terminal box cover is attached with only one screw. Remove the screws to take the cover out. The cover can be removed from the place it is mounted by pulling by hand after the screws are removed.



9.3 Disassembly of Run Capacitor

It is snapped on the rear foot part by means of tabs. When it is disassembled, tabs of the relevant part is stretched from the bottom part, and the part is pulled to the above, and disengaged from tabs





9.4 Removing the Filter Box

Filter piece is attached on the rear foot by means of a screw at one side and a tab on the other. To remove it, the screw is unscrewed and then the piece is released from the tab connection. The relevant piece is serviced together with the supply cable.

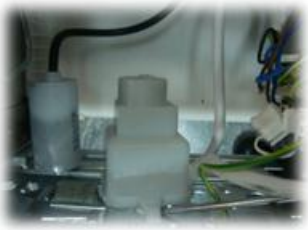



9.5 Removing the Thermal Relay Group

The relay part which is one of the electrical components is contained in the terminal group.

In order to dismount the relevant part, terminal box found on the compressor is removed (2), grounding cable on the rear foot is loosened by a Phillips screwdriver (3). All sockets on the terminal group are removed (4). Screw connections will be unscrewed and the part can be taken out as shown in the picture (5).



1

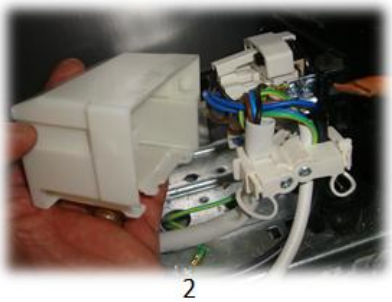

2

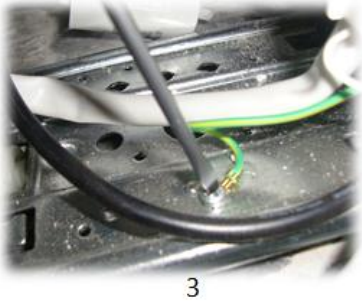

3

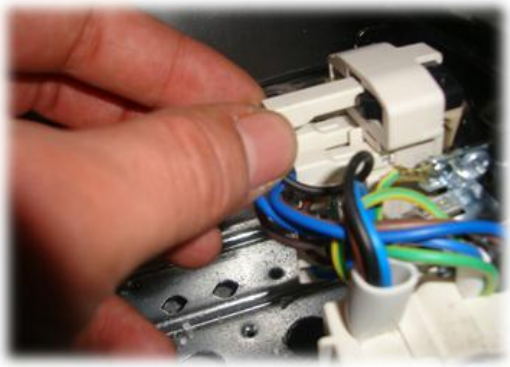

4

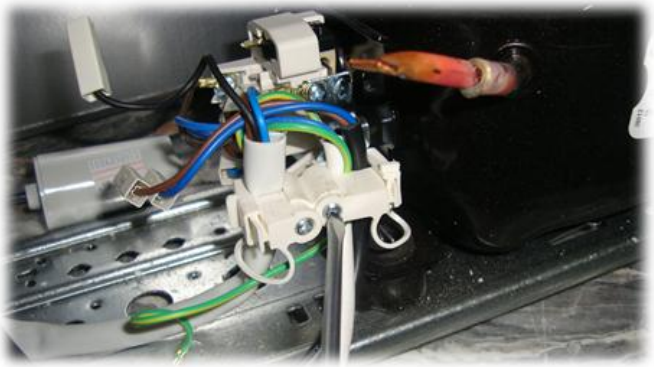

5

10 EXPLANATION OF ELECTRICAL SYSTEM ELEMENTS

10.1 List of Critical Components

4930660200	KMP_S(NB1116HY_R600_115V_60HZ_JIAXIPERA)
4933240200	KOMPR.TERM.GR._NB1118_UL_SKZ
4822290200	NOISE FILTER(AERODEV_DNF06-Z_CGZK
4926890100	BI_2012_LED_BAR_GR_LOGO
5720410100	TOP_ PANEL_LIGHTING_LED_BOARD
4925910200	CONTROL CARD GR EK3 UL
4923323700	CONTROL CARD GR S1 K563XXNE UL
5712630200	DISPLAY CARDLED2TO6HW-BK-2012-NEW
5706320200	DRAIN_HEATER_T60_30W_120V_UL
5706240200	FF DRAIN DUCT HEATER _T54_120V 10W_UL
5716060200	EVAPORATOR_HEATER_K56300_120V_120W_UL
4385620385	DUAL THERMAL FUSE GR_72°C_MLX_220mm
4305896000	FAN GR._BLDC_PNSNC_115MM_MLX3_UL
5712640100	FAN_MOTOR_12V_SUNON_RAST5

10.2 Compressor

Soğutucu gaz sirkülâsyonu kompresörle sağlanır. Elektrik beslemesi bir koruyucu termik üzerinden yapılır. Kompresör ilk kalkışında çok kısa bir süre devrede olan yardımcı sargı, PTC tarafından devreden çıkarılır. Kontrol kartından algoritma ile kumanda edilir. 101 W güç değerine, 1,02 A değerinde çalışma akımına, 158 kCal/saat değerinde soğutma kapasitesine sahiptir.



Manufacturer firm	JIAXIPERA – NB 1116 HY
C.O.P. (w/w)	1,82
Power (W)	101 (ASHRAE)
Operation voltage/frequency	115 V, 60 Hz.
Operating Current	1,02 (ASHRAE)
Voltage Range	98-122 V, 60 Hz.
Cooling capacity	158 kCal/saat (ASHRAE)
Isolation	E

10.3 Freezer fan motor (Freezer Compartment Fan Motor)

It is mounted on the inner body of refrigerator behind the rear cover of evaporator. It ensures circulation of the freezer compartment air in the freezer compartment by passing it continuously over the evaporator

Type	FDQC18AL3C
Voltage range	110-120 V, 60 Hz
Power (W)	2,5
Rotation Direction	Saat yönü (CCW)
Rotation per minute	1700 +/- 200

Freezer fan motor



10.4 Sensor Characteristics

Its resistance decreases as the temperature rises. Sensors on the refrigerator body detect the temperature of their surrounding area and transmit this to the electronic control board. Heat-resistance variance table for the sensors is below:

Temperature (°C)	RT/R25	R deviation	Resistance (kΩ)
-40	33.25	2.64	332.50
-35	24.01	2.40	240.10
-30	17.53	2.16	175.30
-25	12.93	1.93	129.30
-20	9.636	1.71	96.36
-15	7.249	1.49	72.49
-10	5.503	1.29	55.03
-5	4.214	1.08	42.14
0	3.251	0.89	32.51
5	2.532	0.70	25.32
10	1.986	0.52	19.86
15	1.568	0.34	15.68
20	1.248	0.17	12.48
25	1.000	0.00	10.00
30	0.8051	0.16	8.051
35	0.6528	0.32	6.528
40	0.5325	0.47	5.325
45	0.4368	0.62	4.368
50	0.3602	0.77	3.602
55	0.2986	0.91	2.986
60	0.2488	1.05	2.488
65	0.2083	1.18	2.083
70	0.1752	1.31	1.752
75	0.1480	1.44	1.480
80	0.1256	1.57	1.256
85	0.1070	1.69	1.070

90	0.09154	1.81	0.9154
95	0.07861	1.93	0.7861
100	0.06775	2.04	0.6775
105	0.05860	2.15	0.586
110	0.05086	2.26	0.5086
115	0.04430	2.37	0.443
120	0.03870	2.47	0.387
125	0.03391	2.57	0.3391
130	0.02931	2.67	0.2931
135	0.02628	2.77	0.2628
140	0.02323	2.86	0.2323
145	0.02059	2.95	0.2059
150	0.01831	3.05	0.1831
155	0.01631	3.15	0.1631

10.5 FF sensor (Fridge Compartment Sensor)

It detects the temperature in the fridge compartment and transmits this to the microprocessor. Values taken from this sensor are compared with the cut-in and cut-out values of the temperature set for the freezer compartment to run or stop the compressor, the fridge compartment fan motor and the fridge compartment rear wall heater.



10.6 Thermic

It operates when a component is heated with an open circuit. At a certain temperature in order to protect it from overheating the compressor windings open circuit cuts off the current to the compressor. Compressor temperature falls below a certain value, the compressor runs again, completing the circuit

10.7 PTC Relay

Are characterized as having an increased resistance as the temperature increases. By activating the auxiliary winding of the compressor provides the first departure of the current passing through the warm up and then disables the auxiliary coil.

10.8 Reed Sensor

Reed sensor informing whether FF door is closed or open is located inside the hand plate plastic. It sends door open/closed information to the control board. When the door is opened, it is an open circuit, and when the door is closed it is short circuit. Reed sensor is located on the display. It is serviced with the display.

10.9 FF Illumination

A LED is used for illumination of Fridge compartment. LED illumination is activated by the control board when the fridge compartment door is opened.

10.10 Electronic Control Board

The control board is placed in the plastic box with plate board cover as assembled on the panel, on the compressor compartment of the refrigerator.



Connectors:

KN1 : 1 : Phase
KN1 : 2 : Neutral
KN1 : 3 : Compressor
KN1 : 4 : Defrost heater
KN2 : 1 : FF heater
KN2 : 2 : FRZ Fan motor
KN2 : 3 : FF Fan motor
KN2 : 5 : Illumination

KN3: Sensor Socket
KN4 : Display socket

10.11 EK3 BOARD

In addition to control board, it is used for driving 12VDC illumination with the optional 12VDC FF fan (Square) located on the refrigerator.

10.12 Display

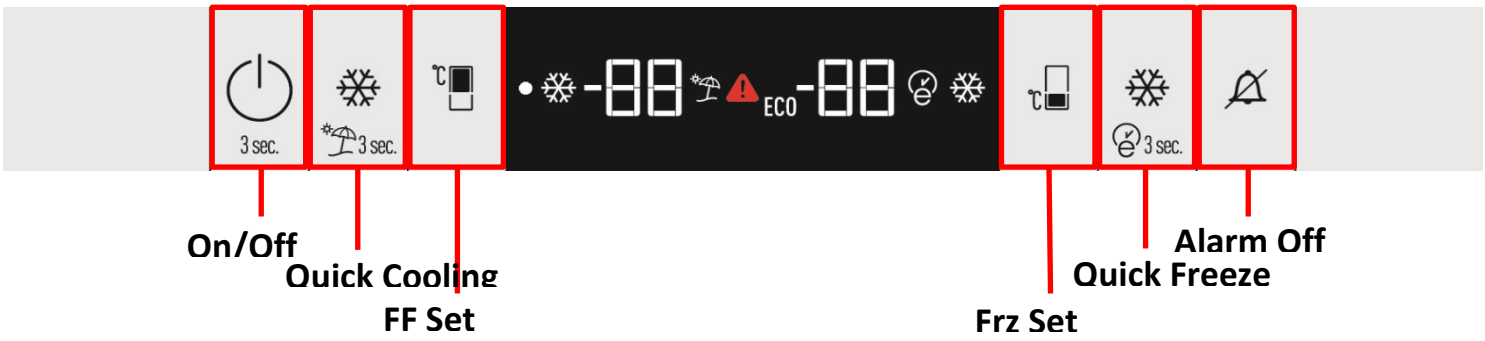

11 REFRIGERATOR OPERATING PRINCIPLE

11.1 FF Defrost

FF Defrost		
Decision:	**Normal Situation**	**Closed Door Algorithm**
1. Depending on the number of cycles of the compressor 2. Depending on the maximum defined operating time of the compressor 3. The compressor runs continuously for at least 120 minutes, when FF evaporator sensor is colder than -30 ° C FF defrost begins	5 240mins	10 600mins
Algorithmic Behaviour:	**Normal Situation**	**Closed Door Algorithm**
FF Fan Compressor	Works Not work	Not work Not work
Function Ending: 4. When FF Evaporator sensor reaches +3C, FF defrost ends. 5. Maximum FF defrost time is 130 minutes.		

11.2 Compressor

Working Conditions

The condition to be Compressor ON:

- FF Air Temperature >= cut-in
- FF defrostun ending(FF Eva>+3)

The condition to be Compressor OFF:

- FF defrost situation
- FF Hava <= cut-out

Notes:

Compressor pause time = 5 minutes.

11.3 Quick Cool

When Quick Cool button is pressed, the snowflake icon next to the icons of the fresh food compartment lights.

The function is ended by pressing the same button again.
When Freezer compartment set value is changed, the function terminates..
If holiday mode is activated while function is active, the function will be canceled
While function is active, cooling components work according to a certain cut-in cut-out values.

12 SERVICE and DEALER MODE

12.1 Service Test

The display board we use in the refrigerator has a six key system and a reed switch for door control.
Set values are shown on the display.



Within the first **30 sec.** after the refrigerator is energized, it can be taken to the Service Mode by simultaneously pressing **On/Off** and **Display Off** buttons for 2 seconds.

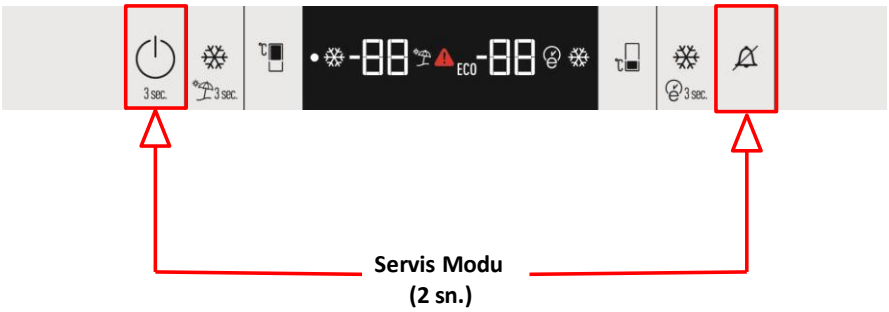

Following steps are applied respectively in the Service Mode.
Step 1: The buzzer will activate for a short time. Afterwards All LEDs will illuminate for 0.5 sec and go off for 0.5 sec and

ON



OFF



Step 2: Step 1 ends when any key is pressed; software version and revision information are shown alternately as shown below on the display. Note: Updated version revision number should be checked from the technical drawing.



Step 3: When any key is pressed , all sensors are shown on the display in a loop with 1 sec intervals.

1st View (FF Evaporator Sensor) :



2nd View (Freezer Air Sensor) :



3rd View (Defrost Sensor) :



4th View (FF Hava Sensor) :



Step 4: When On/Off key is pressed, component operation mode is started.
When FRZ Set key pressed, components can bo chosen in forward direction. When FF Set key is pressed, components can be chosen in backwards direction. Chosen component can be activated/deactivated by Rapid Freeze/Rapid Cooling keys.
If "Co" "1" pressed, compresor operates. If "Co" "0" pressed, compresor will stop.

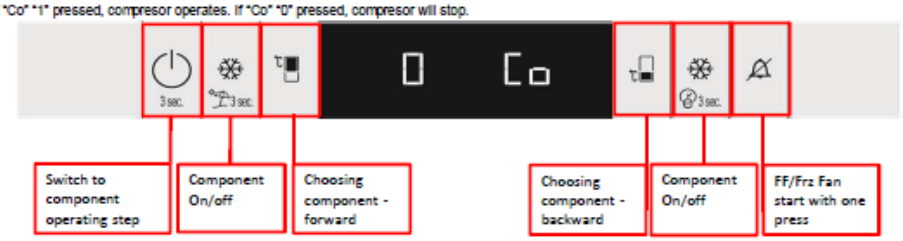

Step 5: If "rE" "1" is chosen, defrost heater starts operating. If "rE" "0" is chosen, defrost heater stops.



Step 6: If "Io" "1" is chosen, ionizer starts to operate.If "Io" "0" is chosen, ionizer stops.



Step 7: If "FO" "1" is chosen FF heater operates. If "FO" "0" is chosen, FF heater stops.



Step 8: If "FF" "1" is chosen, FF fan operates. If "FF" "0" is chosen,FF fan stops



Step 9: If "rF" "1" is chosen, FRZ fan operates. If "rF" "0" is chosen FRZ fan stops



Quitting Service Mode:
After 30 minutes,after electricty cut off and when starting service mode,you can quit this mode by this application.



Notlar:
By pressing twice to the On/Off key, sensor displaying step can be seen
If more than one component is active in the component operating step, active components are shown cyclically on the display
When no component is active, FF fan and FRZ fan can be activated by pressing Alarm Off key

12.2 Dealer Mode

Step 1. If-respectively- **(ON - OFF)-(Quick Fridge)-(Fridge Set)-(Freezer Set)-(Quick Freeze)-(Alarm Off)**
1 2 3 4 5 6

keys are pressed, buzzer will active in a while and dealer mode is started
During dealer mode, "!" icon will be lightening continuously





When display keys are pressed, related icons will be lightening but no cooling occurs
If the door is kept open, the alarm will be on

How to quit: If the electricity is cut off and supplied again, the dealer mode is quitted

The display board we use in the refrigerator has a five-key system.
Icons that represent the set values are shown on the display.

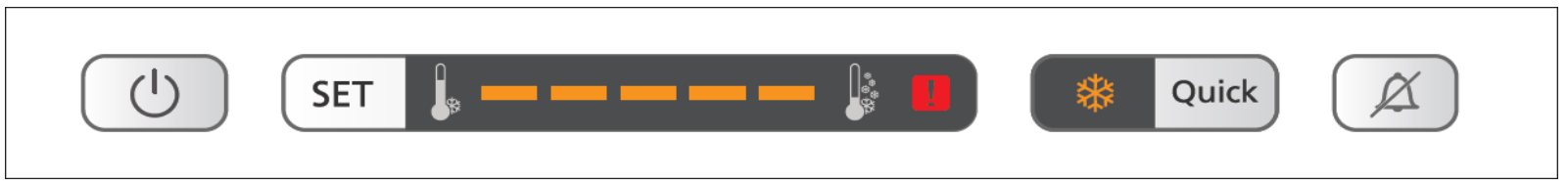

Within the first 30 seconds after the refrigerator is energized, it can be taken to the Service Mode by simultaneously pressing **Or**

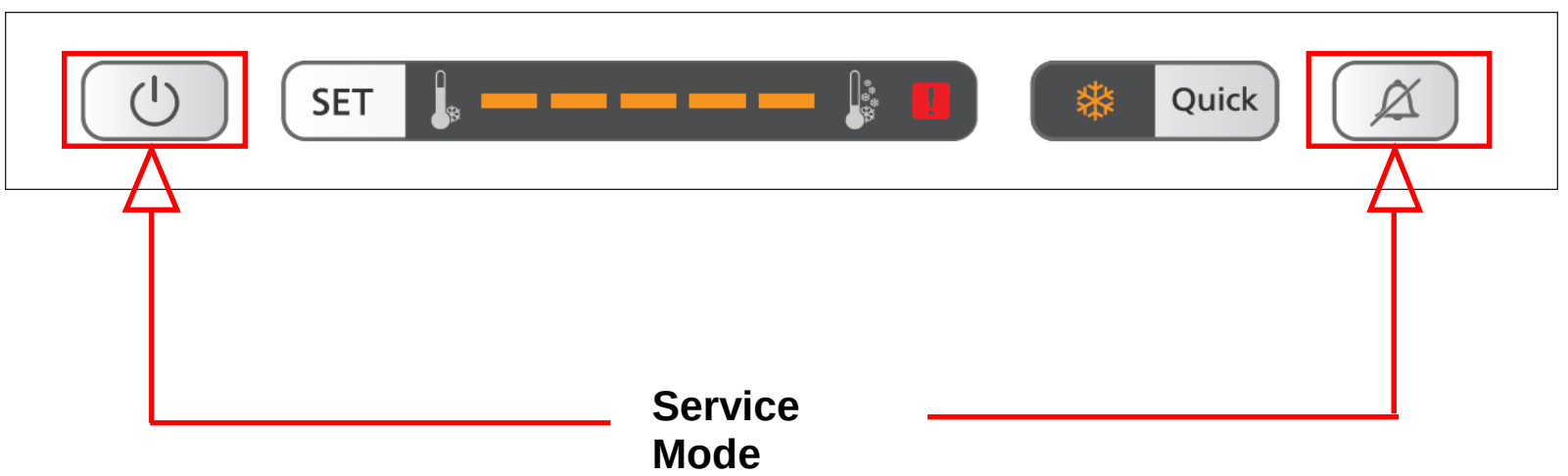

Service Mode

Following steps are applied respectively in the Service Mode.
Step 1: Buzzer will be active for a short time. After that, LEDs and buzzer will operate for 0.5 sec and go off for 0.5 sec. alterna

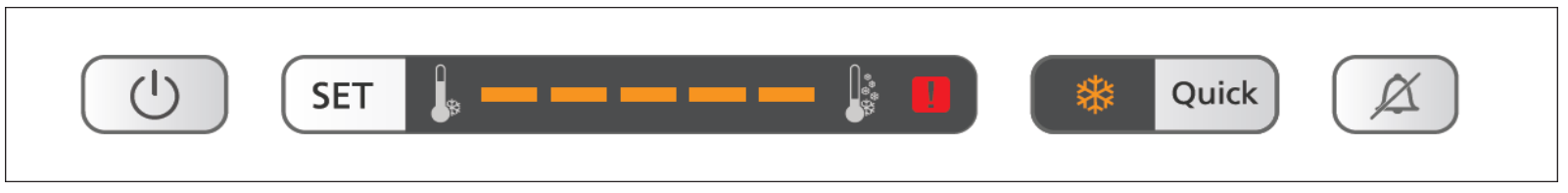

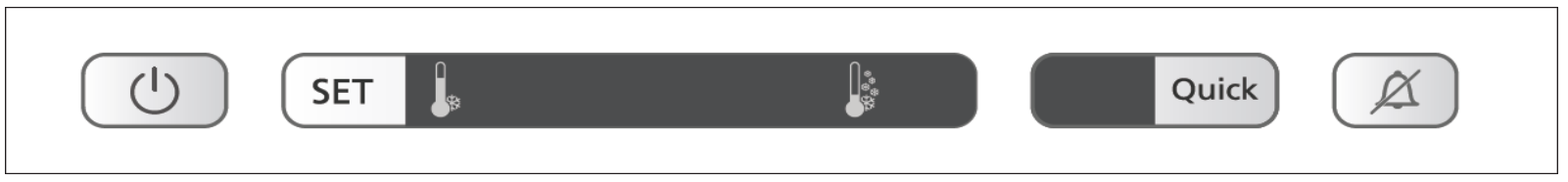

GRUNDIG BUILT-IN COMBI ENTERING THE DEALER MODE

Step 1. press (**ON - OFF**)-(**Fridge Set**)-**(Quick Fridge)**-**(Alarm Off)**
1 **2** **3** **4**
keys respectively, buzzer activates for a little time and dealer mode is entered.
"!" icon is continuously lit during dealer mode.

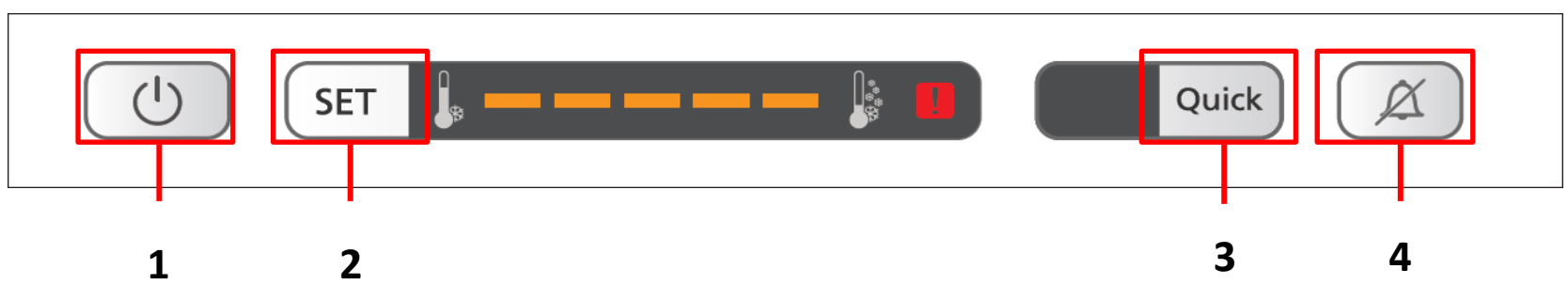

Relevant icons are lit when display buttons are pressed, however cooling is not performed.
Door ajar alarm is given if the door is left open. 4

Exiting the Mode:

5
You may exit from dealer mode by deenergizing and then energizing the appliance again.

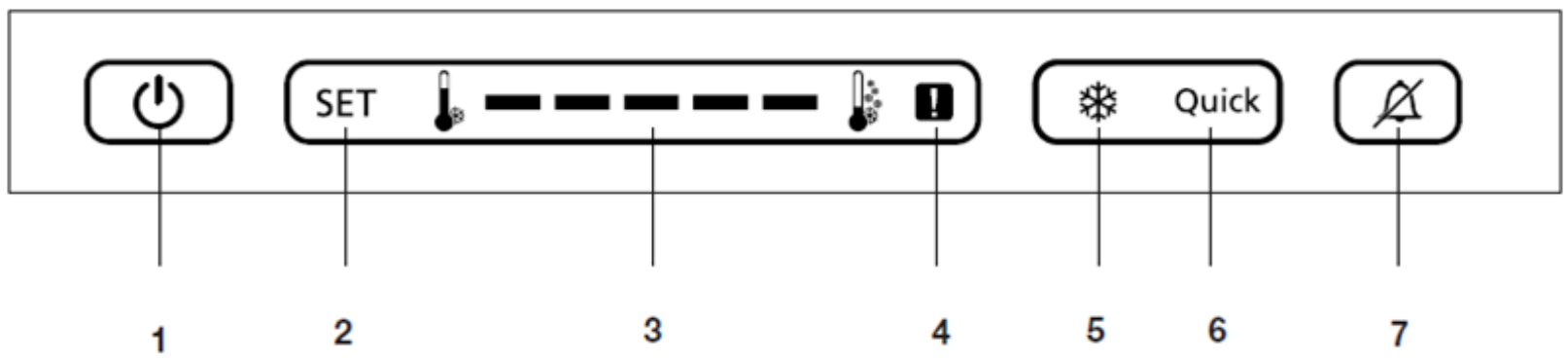

Frz. Air Sensör Error	Only exclamation and set value transformation
Frz. Evaporator Sensor Error	Binary 1, exclamation and set value transformation
Larder Evaporator Sensor Error	Binary 2, exclamation and set value transformation
Larder Air Sensor Error	Binary 3, exclamation and set value transformation
Larder Defrost Heater Error	Binary 4, exclamation and set value transformation

13 ERROR CODES

FRZ Air Temperature Sensor Error:

E and 0 lightens on the display rotatively with set values and the warning icon lights on and off, the buzzer alerts.



Defrost Sensor Error:

E and 1 lightens on the display rotatively with set values and the warning icon lights on and off, the buzzer alerts.



FF Evaporator Sensor Error:

E and 2 lightens on the display rotatively with set values and the warning icon lights on and off, the buzzer alerts.

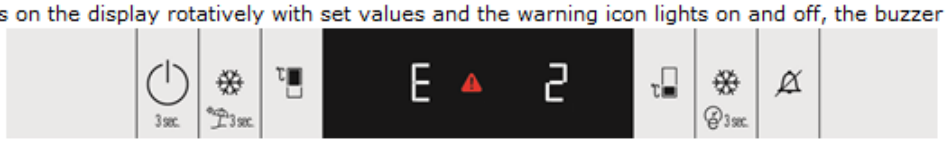

FF Air Temperature Sensor Error:

E and 3 lightens on the display rotatively with set values and the warning icon lights on and off, the buzzer alerts.



Heater error:

E and 4 lightens on the display rotatively with set values and the warning icon lights on and off, the buzzer alerts.



High Temperature Air:

The warning icon on the display lightens. Set values are continud to be shown



14 DISPLAY TROUBLESHOOTING MANUAL

EFFECTED MODELS	ERROR CODES	
K56NEBU(Blomberg BI)	FF Air Temperature Error	FF Defrost Error
	X	X
	FRZ Air Temperature Error	FRZ Defrost Error
	X	X

S1 CONTROL BOARD (492332XXXX)
1.HATA KODLARI

FF Air Temperature Sensor Error:

E and 3 lightens on the display rotatively with set values and the warning icon lights on and off, the buzzer alerts.



E3: FF Air Temperatu re Sensor Error

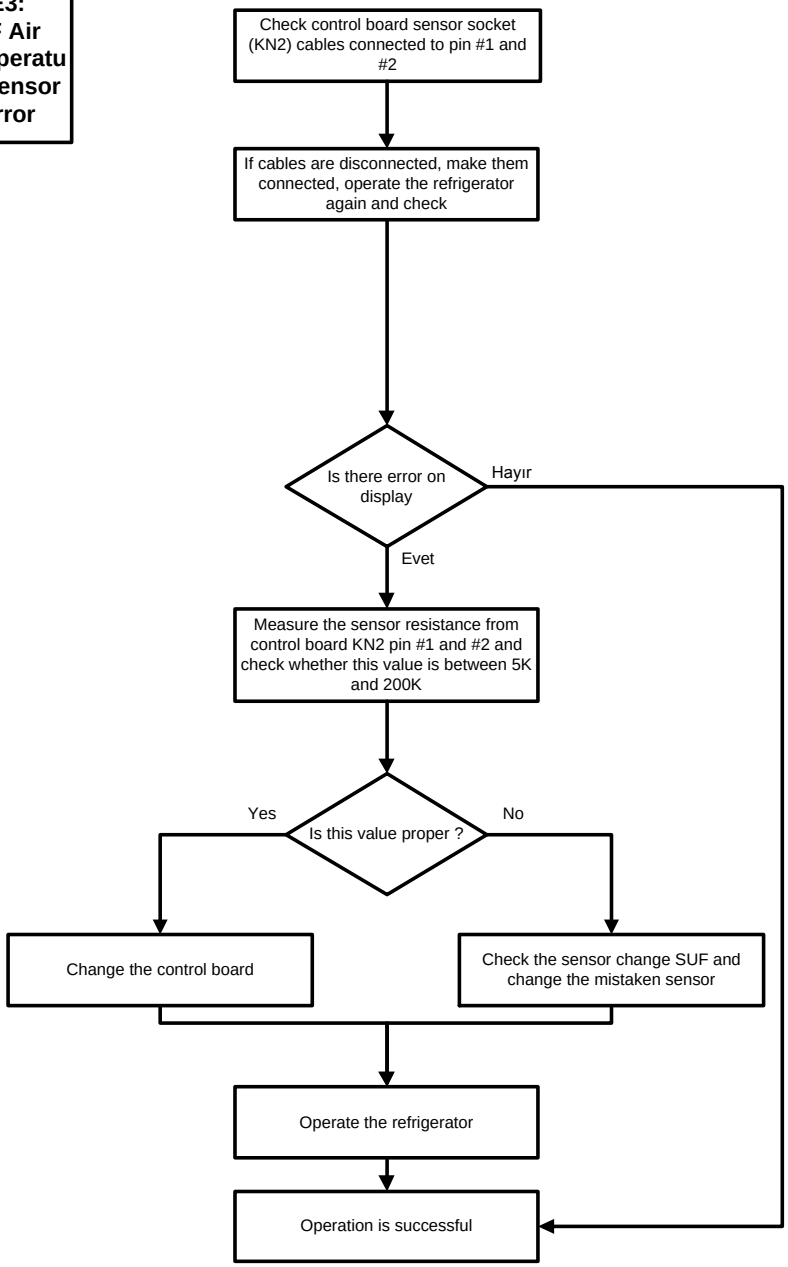

FF Evaporator Sensor Error:

E and 2 lightens on the display rotatively with set values and the warning icon lights on and off, the buzzer alerts.



E2: FF Evaporator Sensor Error

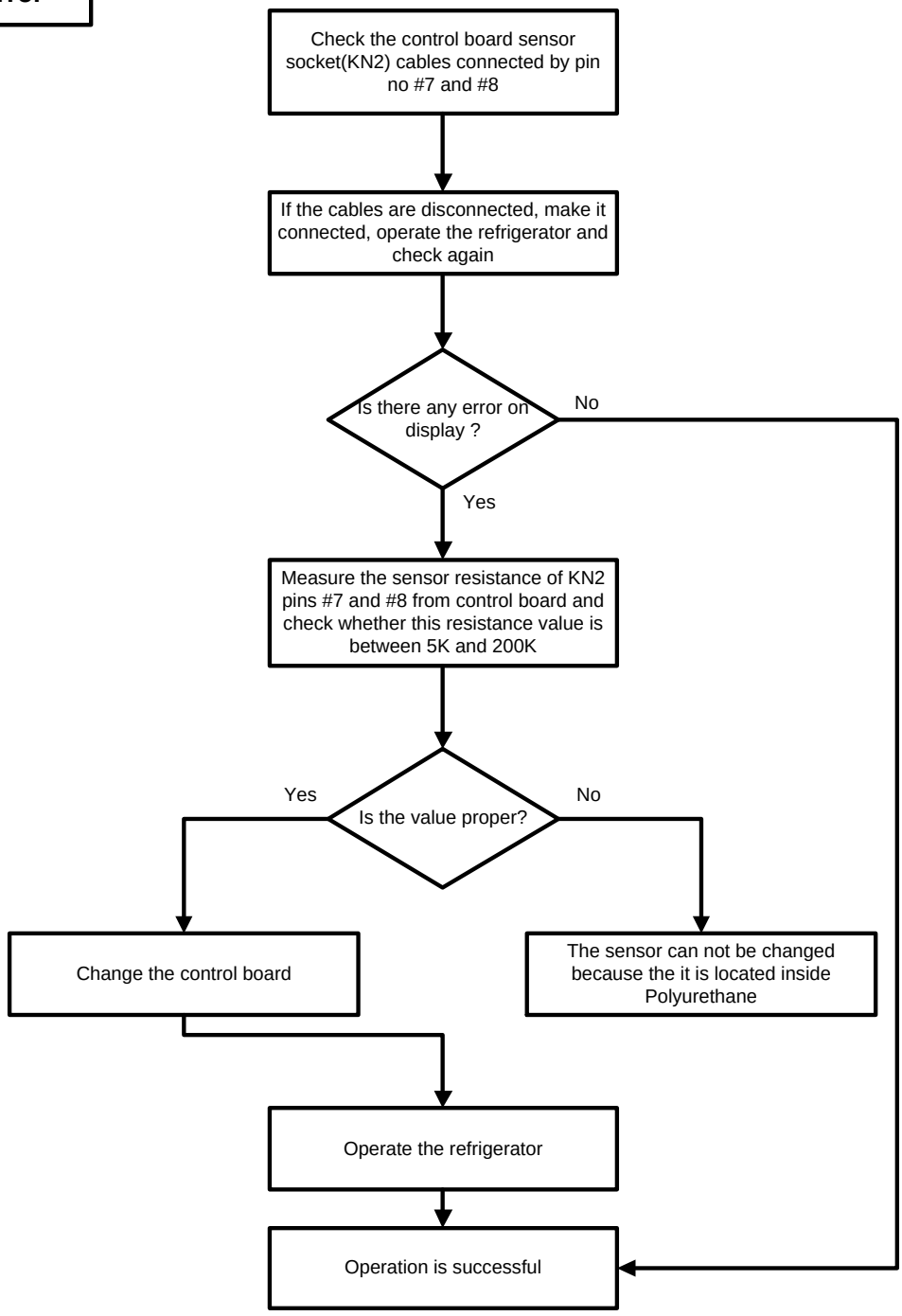

FRZ Air Temperature Sensor Error:

E and 0 lightens on the display rotatively with set values and the warning icon lights on and off, the buzzer alerts.



E0: Freezer Air Temperature Sensor Error

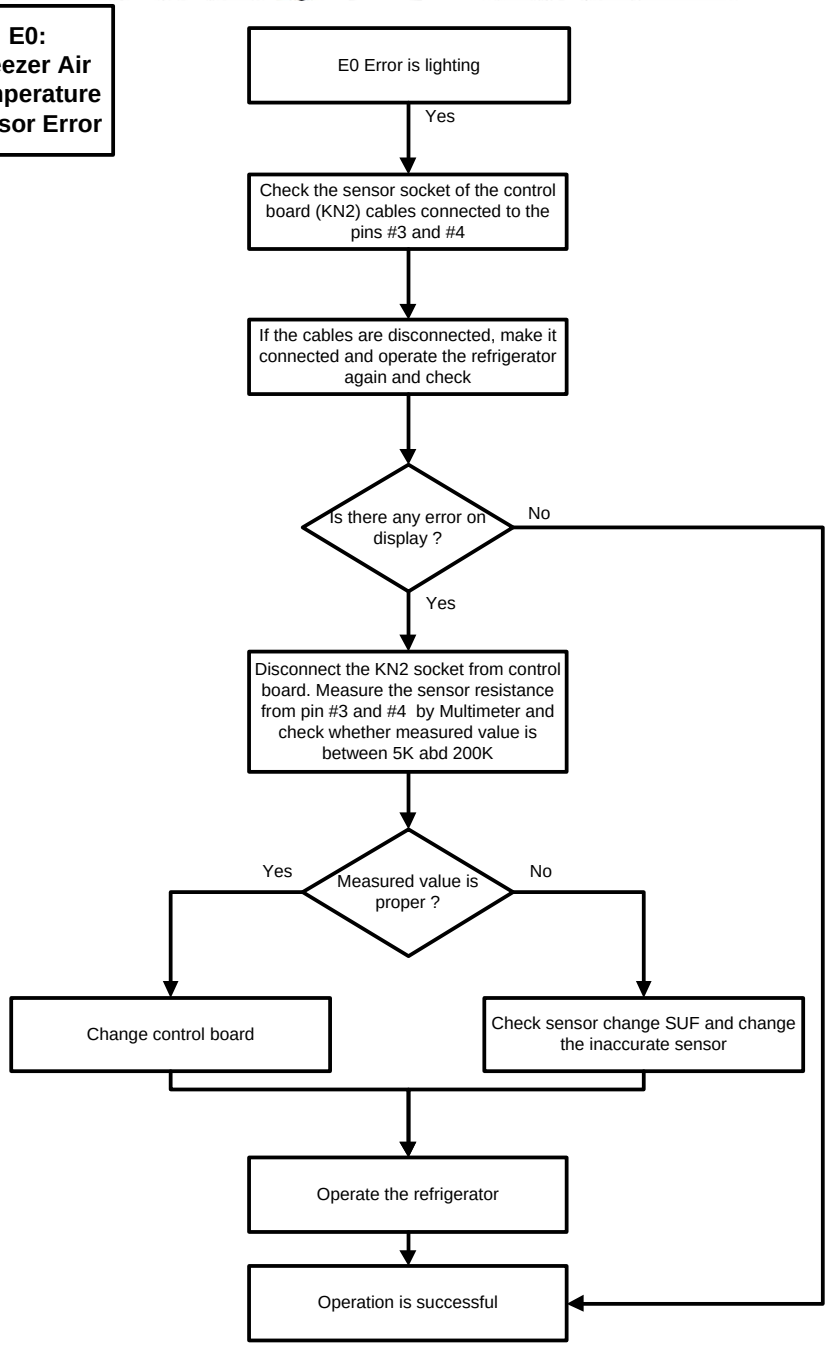

Defrost Sensor Error:

E and 1 lightens on the display rotatively with set values and the warning icon lights on and off, the buzzer alerts.



E1: Freezer Evaporator Sensor Error

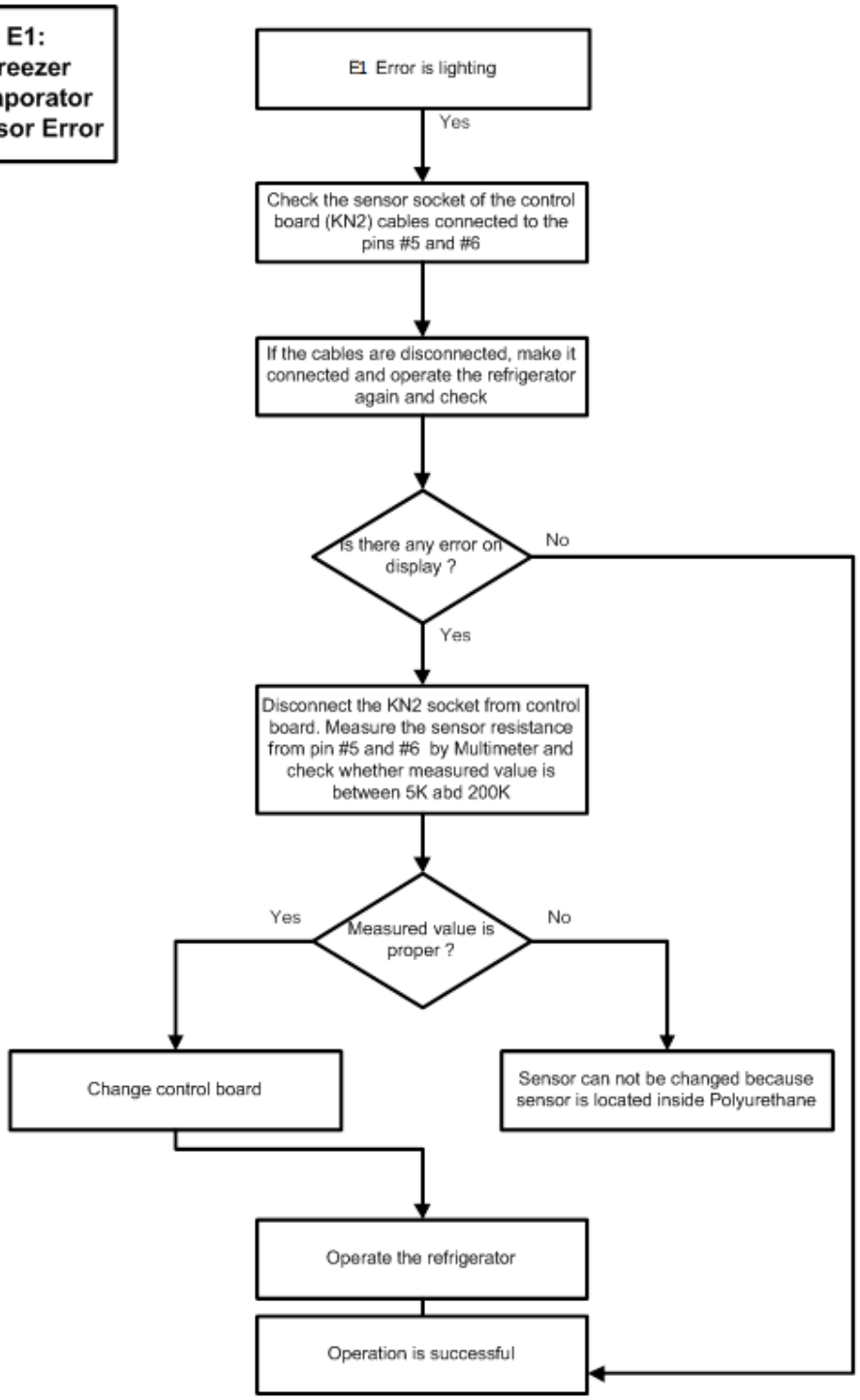

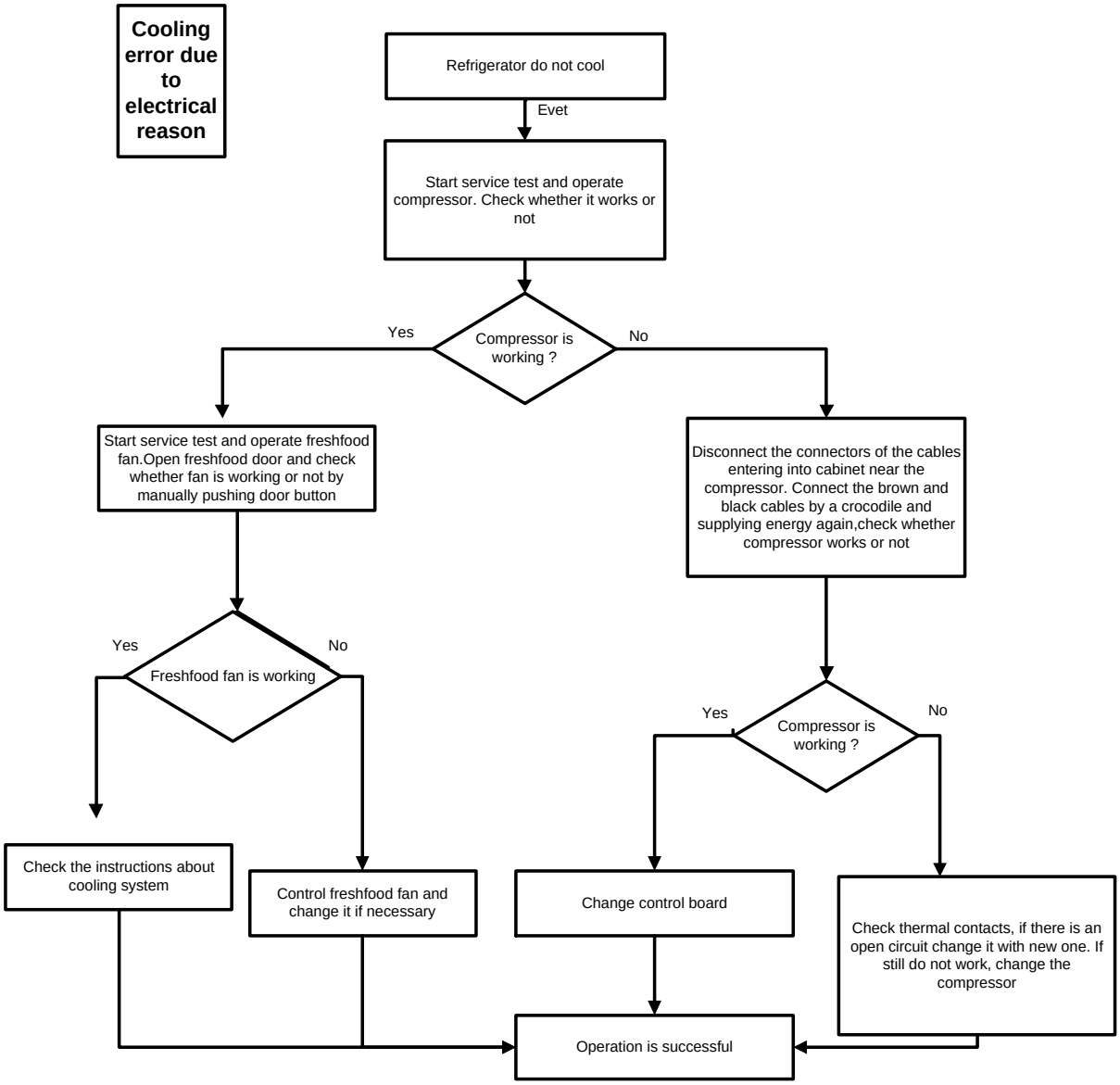
Cooling error due to electrical reason
Refrigerator do not cool
Evet
Start service test and operate compressor. Check whether it works or not
Compressor is working ?
Yes
No
Start service test and operate freshfood fan.Open freshfood door and check whether fan is working or not by manually pushing door button
Disconnect the connectors of the cables entering into cabinet near the compressor. Connect the brown and black cables by a crocodile and supplying energy again,check whether compressor works or not
Freshfood fan is working
Yes
No
Compressor is working ?
Yes
No
Check the instructions about cooling system
Control freshfood fan and change it if necessary
Change control board
Check thermal contacts, if there is an open circuit change it with new one. If still do not work, change the compressor
Operation is successful

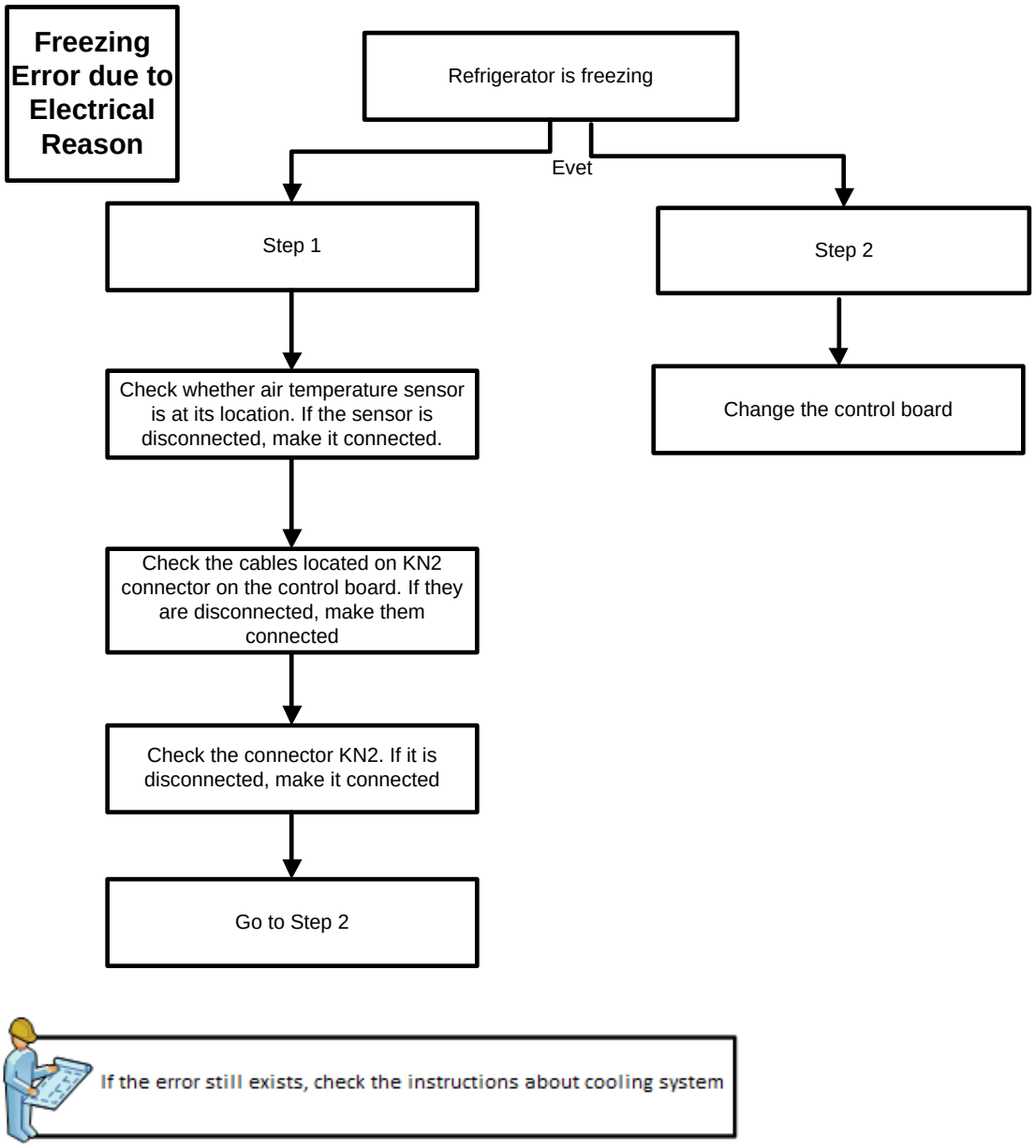

REVISION HISTORY		
REV.NO.	**DATE**	**REVISIONS**
REV 01	21.03.2013	First Release

15 ELECTRICAL CIRCUIT AND GAS FLOW DIAGRAM

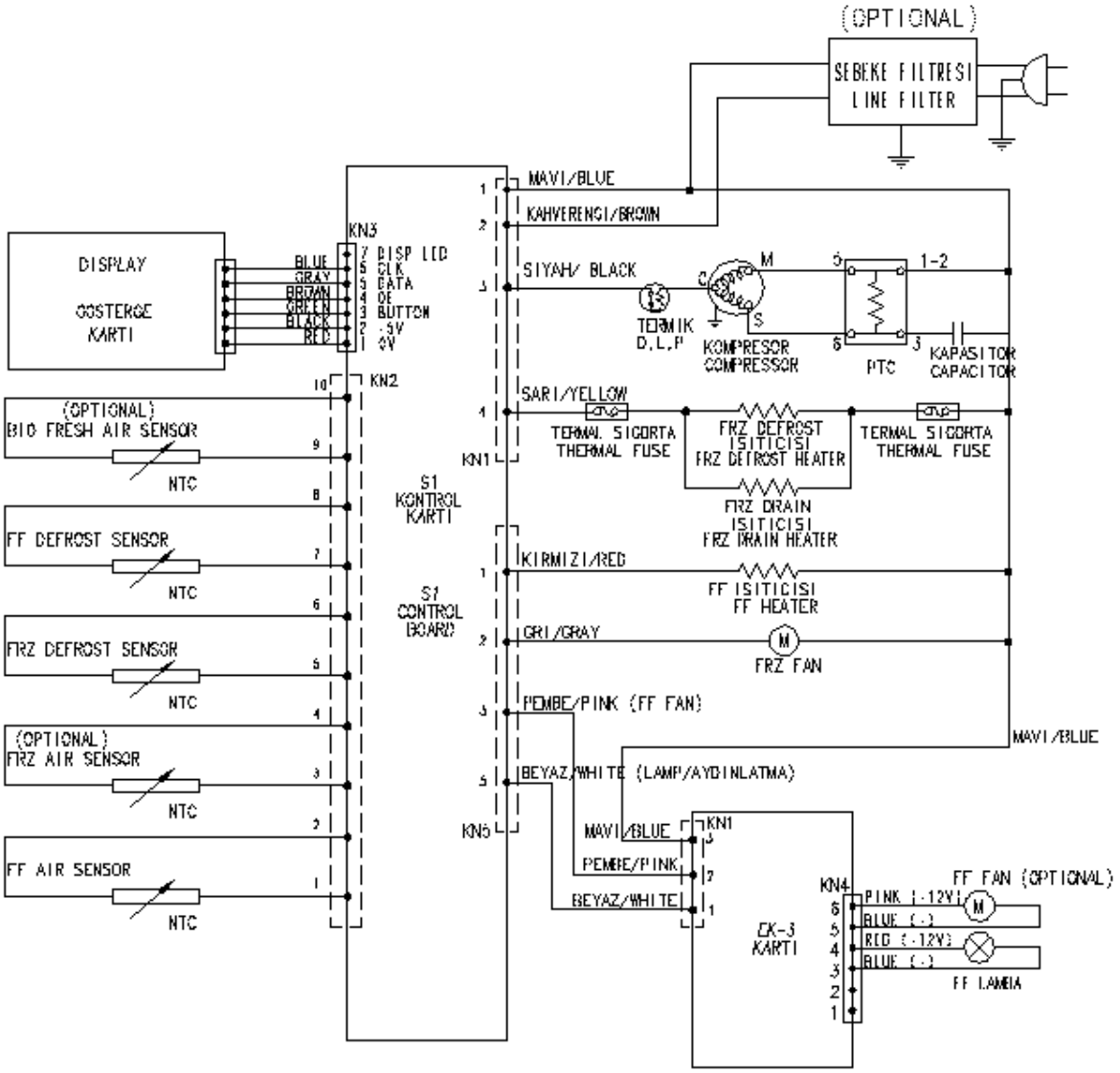

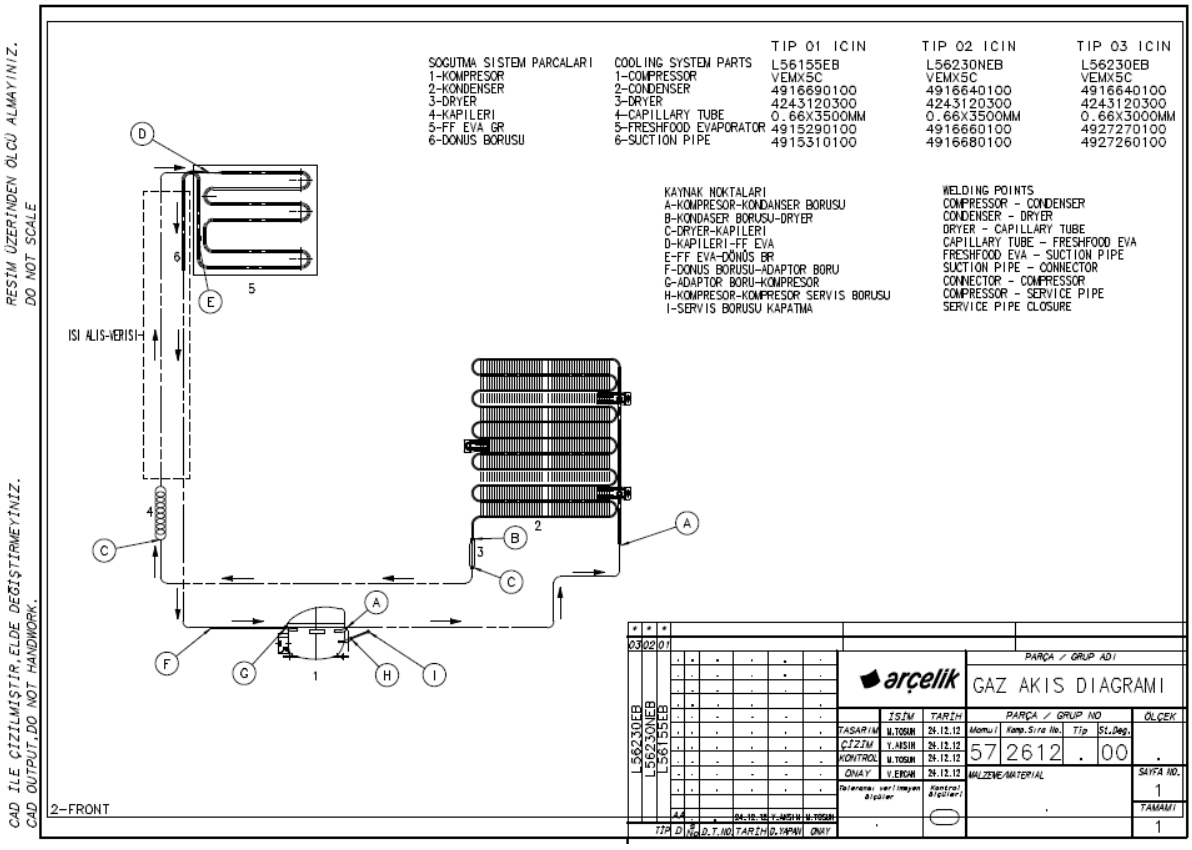
RESİM ÜZERİNDEN ÖLCÜ ALMAYINIZ.
DO NOT SCALE
CAD İLE ÇİZİLMİŞTİR,ELDE DEĞİŞTİRMEYİNİZ.
CAD OUTPUT,DO NOT HANDWORK.
SOGUTMA SISTEM PARCALARI
1-KOMPRESOR
2-KONDENSER
3-DRYER
4-KAPILERI
5-FF EVA GR
6-DONUS BORUSU
COOLING SYSTEM PARTS
1-COMPRESSOR
2-CONDENSER
3-DRYER
4-CAPILLARY TUBE
5-FRESHFOOD EVAPORATOR
6-SUCTION PIPE
TIP 01 ICIN
L56155EB
VEMX5C
4916690100
4243120300
0.66X3500MM
4915290100
4915310100
TIP 02 ICIN
L56230NEB
VEMX5C
4916640100
4243120300
0.66X3500MM
4916660100
4916680100
TIP 03 ICIN
L56230EB
VEMX5C
4916640100
4243120300
0.66X3000MM
4927270100
4927260100
KAYNAK NOKTALARI
A-KOMPRESOR-KONDANSER BORUSU
B-KONDASER BORUSU-DRYER
C-DRYER-KAPILERI
D-KAPILERI-FF EVA
E-FF EVA-DÖNÜS BR
F-DONUS BORUSU-ADAPTOR BORU
G-ADAPTOR BORU-KOMPRESOR
H-KOMPRESOR-KOMPRESOR SERVIS BORUSU
I-SERVIS BORUSU KAPATMA
WELDING POINTS
COMPRESSOR - CONDENSER
CONDENSER - DRYER
DRYER - CAPILLARY TUBE
CAPILLARY TUBE - FRESHFOOD EVA
FRESHFOOD EVA - SUCTION PIPE
SUCTION PIPE - CONNECTOR
CONNECTOR - COMPRESSOR
COMPRESSOR - SERVICE PIPE
SERVICE PIPE CLOSURE
ISI ALIS-VERISI
2-FRONT
arçelik
PARÇA / GRUP ADI
GAZ AKIS DIAGRAMI
ISIM
TARIH
TASARIM M.TOSUN 24.12.12
ÇIZIM Y.AKSIN 24.12.12
KONTROL M.TOSUN 24.12.12
ONAY V.ERCAN 24.12.12
PARÇA / GRUP NO
Mamul Kamp.Sira No. Tip St.Deg.
57 2612 . 00
ÖLÇEK
MALZEME/MATERIAL
SAYFA NO. 1
TAMAMI 1
L56230EB
L56230NEB
L56155EB
TIP D D.T.NO TARIH D.YAPAN ONAY

16 TROUBLESHOOTING AND FAILURE IDENTIFICATION

Please review this list before calling the service. To do so will save you time and money. This list includes frequent complaints that are not arising from defective workmanship or material usage. Some of the features described here may not exist in your product.

Complaint	Possible Reason	Solution
The refrigerator does not operate	Is the refrigerator properly plugged in?	Insert the plug to the wall socket.
	Is the fuse of the socket which your refrigerator is connected to or the main fuse blown out?	Check the fuse.
Condensation on the side wall of the fridge compartment (MULTIZONE or COOLSELECT).	Very cold ambient conditions. Frequent opening and closing of the door. Highly humid ambient conditions. Storage of food containing liquid in open containers. Leaving the door ajar.	Switching the thermostat to a colder degree. Decreasing the time the door left open or using it less frequently. Covering the food stored in open containers with a suitable material. Wipe the condensation using a dry cloth and check if it persists.
Compressor is not running	Protective thermic of the compressor will blow out during sudden power failures or plug-out plug-ins as the refrigerant pressure in the cooling system of the refrigerator has not been balanced yet.	Your refrigerator will start running approximately after 6 minutes. Please call the service if your refrigerator does not startup at the end of this period.
	The fridge is in defrost cycle.	This is normal for a full-automatically defrosting refrigerator. Defrosting cycle occurs periodically.
	Your refrigerator is not plugged into the socket.	Make sure that he plug is inserted tightly to the wall socket.
	Are the temperature adjustments correctly made?	
	There is a power failure.	Call your electricity supplier.
The fridge is running frequently or for a long time.	Your new refrigerator may be wider than the previous one.	This is quite normal. Large refrigerators operate for a longer period of time.
	The ambient room temperature may be high.	This is quite normal.
	The refrigerator might have been plugged in recently or might have been loaded with food.	Cooling down of the refrigerator completely may last for a couple of hours longer.
	Large amounts of hot food might have been put in the refrigerator recently.	Hot food causes the refrigerator to run longer until they reach the safe storage temperature.
	Doors might have been opened frequently or left ajar for a long time.	The warm air that has entered into the refrigerator causes the refrigerator to run for longer periods. Open the doors less frequently.
	Freezer or fridge compartment door might have been left ajar.	Check if the doors are tightly closed.

Complaint	Possible Reason	Solution
The fridge is running frequently or for a long time.	The refrigerator is adjusted to a very low temperature.	Adjust the refrigerator temperature to a warmer degree and wait until the temperature is achieved.
	Door seal of the fridge or freezer may be soiled, worn out, broken or not properly seated.	Clean or replace the seal. Damaged/broken seal causes the refrigerator to run for a longer period of time in order to maintain the current temperature.
The temperatures are too low		
Freezer temperature is very low while the fridge temperature is sufficient.	The freezer temperature is adjusted to a very low temperature.	Adjust the freezer temperature to a warmer degree and check.
Fridge temperature is very low while the freezer temperature is sufficient.	The fridge temperature is adjusted to a very low temperature.	Adjust the fridge temperature to a warmer degree and check.
Food kept in the fridge compartment drawers are freezing.	The fridge temperature is adjusted to a very low temperature.	Adjust the fridge temperature to a warmer degree and check.
The temperatures are too high.		
Temperature in the fridge or freezer is very high.	The fridge temperature is adjusted to a very high degree. Fridge adjustment has an effect on the temperature of the freezer.	Change the temperature of the fridge or freezer until the fridge or freezer temperature reaches to a sufficient level.
	Doors might have been opened frequently or left ajar for a long time.	Warm air rushes into the fridge or freezer when the doors are opened. Open the doors less frequently.
	The door might be left ajar.	Close the door completely.
	Large amounts of hot food might have been put in the refrigerator recently.	Wait until the fridge or freezer reaches the desired temperature.
	The refrigerator might have been plugged in recently.	Cooling down of the refrigerator completely takes time because of its size.

Complaint	Possible Reason	Solution
There is a ticking noise from the refrigerator.	This noise comes from the solenoid valve of the refrigerator. Solenoid valve functions for the purpose of coolant passage through a compartment called MULTIZONE/COOL SELECT compartment which can be adjusted to different temperatures, and performing cooling functions.	This is normal and is not fault cause.
Noise		
The operation noise increases when the refrigerator is running.	The operating performance characteristics of the refrigerator may change according to the changes in the ambient temperature.	It is normal and not a fault.
Vibrations or noise.	The floor is not even or it is weak. The refrigerator rocks when moved slowly.	Make sure that the floor is level, strong and capable to carry the refrigerator.
	The noise may be caused by the items put onto the refrigerator.	Such items should be removed from the top of the refrigerator.
There are noises like liquid spilling or spraying.	Liquid and gas flows happen in accordance with the operating principles of your refrigerator.	It is normal and not a fault.
There is a noise like wind blowing.	Air activators (fans) are used in order to allow the refrigerator to cool efficiently.	It is normal and not a fault.
Water/condensation/ice in the refrigerator.		
Condensation on the inner walls of refrigerator.	Hot and humid weather increases icing and condensation.	It is normal and not a fault.
	The doors are ajar.	Make sure that the doors are closed completely.
	Doors might have been opened very frequently or they might have been left open for a long time.	Open the door less frequently.
Water/condensation/ice on the outside of the refrigerator.		
Humidity occurs on the outside of the refrigerator or between the doors.	The weather may be humid.	This is quite normal in humid weather. When the humidity is less condensation will disappear.
Bad odor inside the refrigerator.	Inside of the refrigerator must be cleaned.	Clean the inside of the refrigerator with a sponge, warm water or carbonated water.
	Some containers or packaging materials might be causing the smell.	Use a different container or different brand packaging material.

Complaint	Possible Reason	Solution
Opening and closing of the doors		
The door(s) is (are) not closing.	Food packages may prevent the door's closing.	Replace the packages that are obstructing the door.
	The refrigerator is probably not completely vertical on the floor and it might be rocking when slightly moved.	Adjust the elevation screws.
	The floor is not level or strong.	Make sure that the floor is level and capable to carry the refrigerator.
Crispers are stuck.	The food might be touching the ceiling of the drawer.	Rearrange food in the drawer.

17 EXPLODED PICTURES

17.1.A Door Accessories Pack

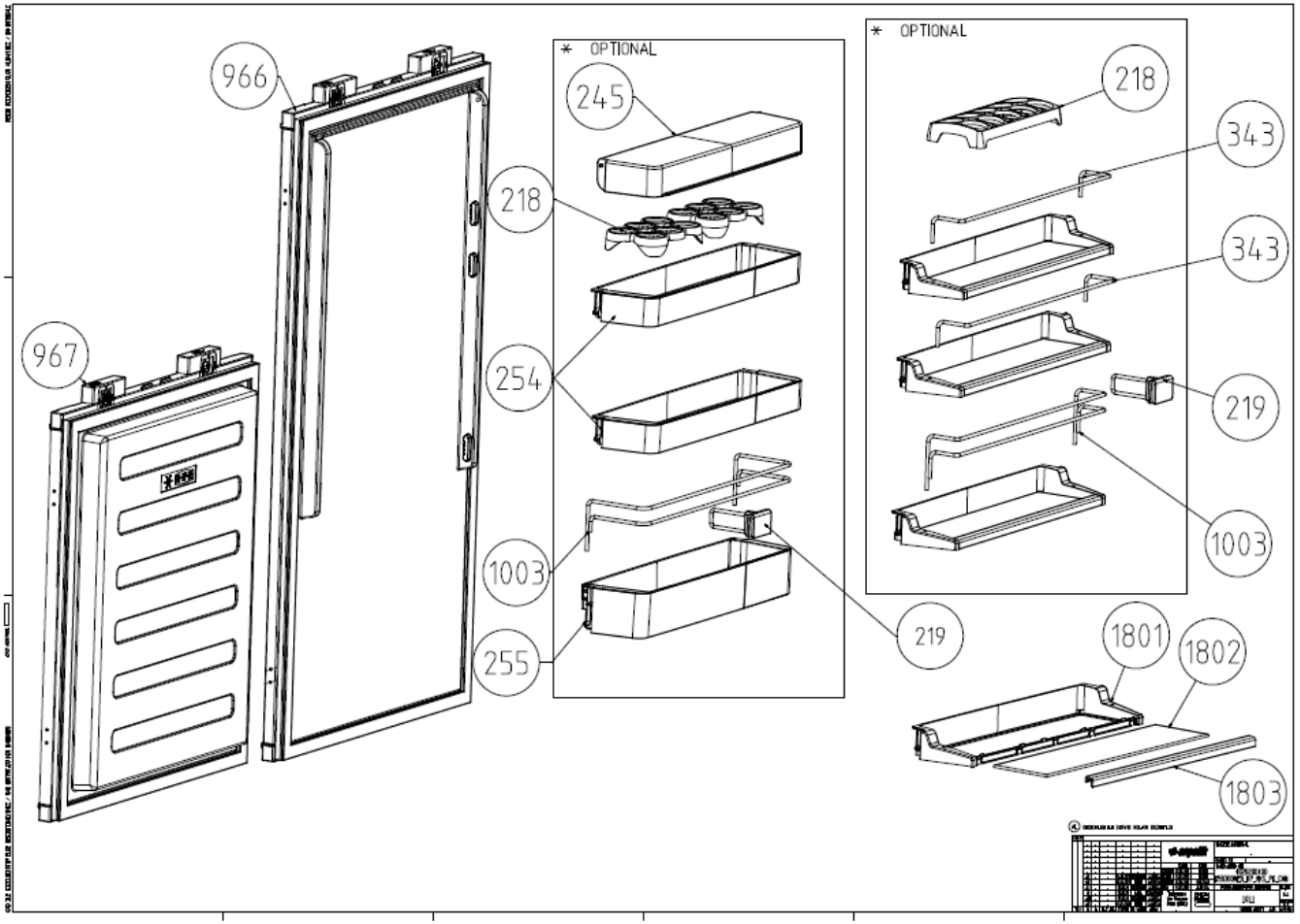

17.1.B Body Accessories Pack

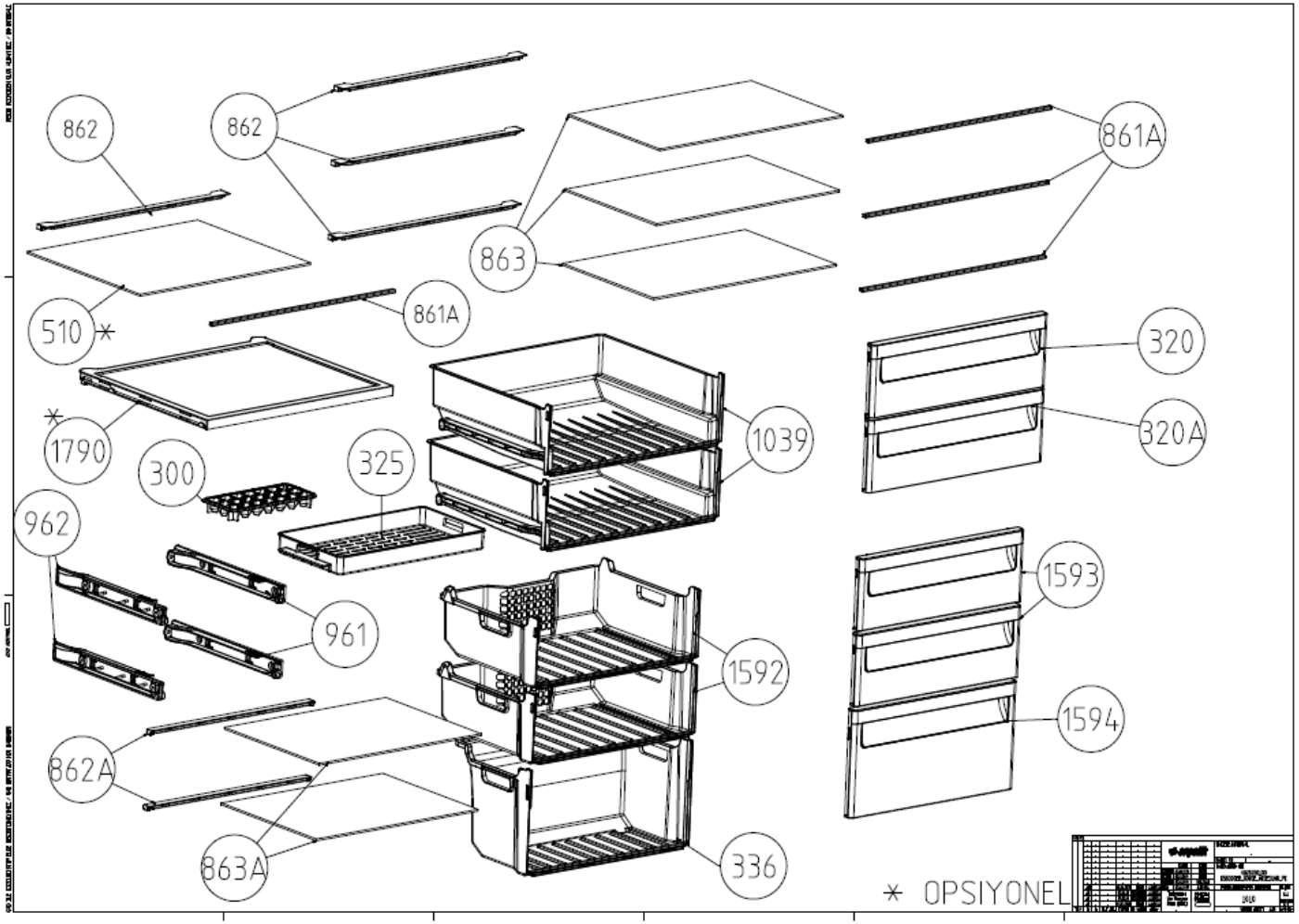

17.1.C Customer Pack

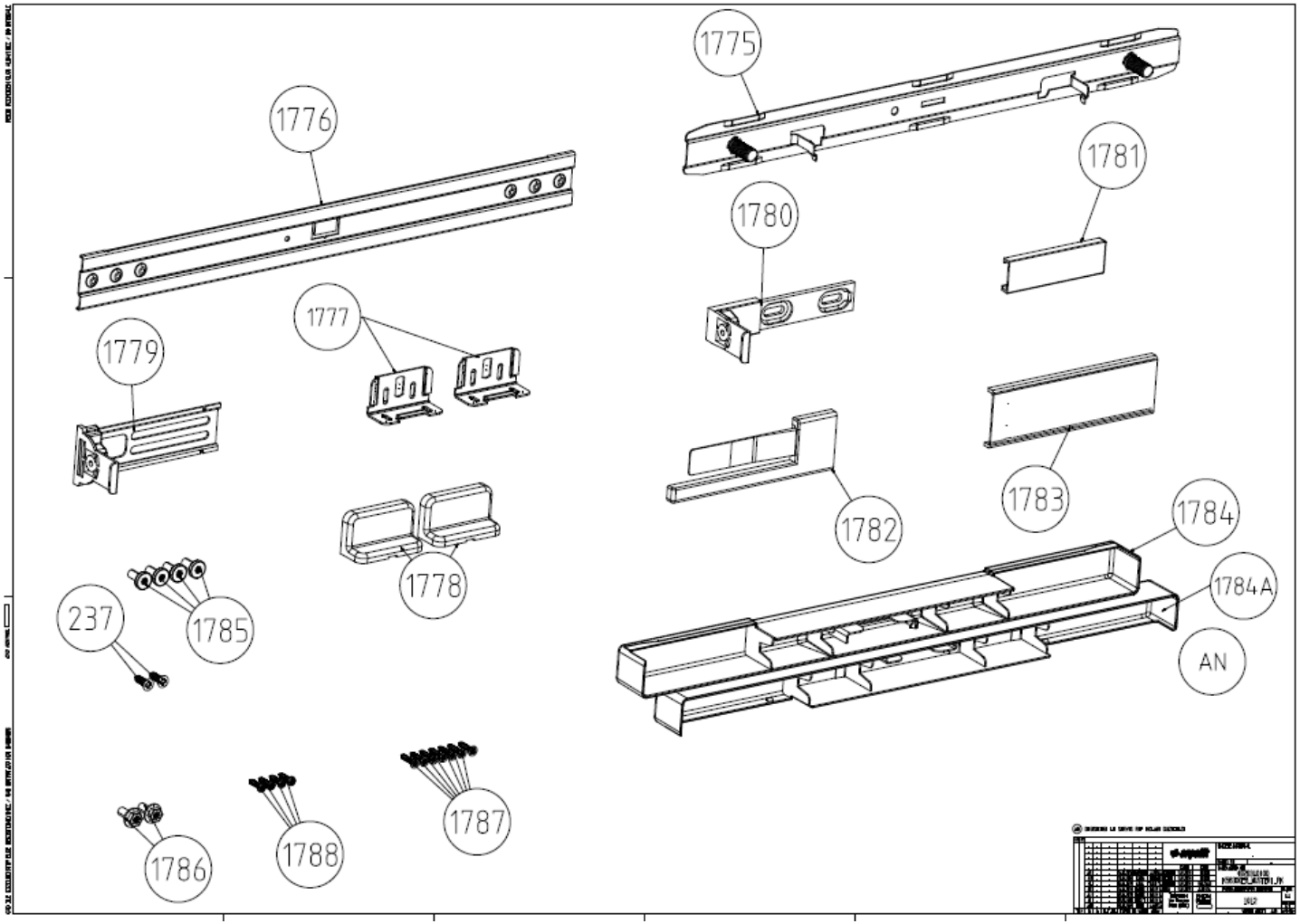

17.1.D Compressor Pack

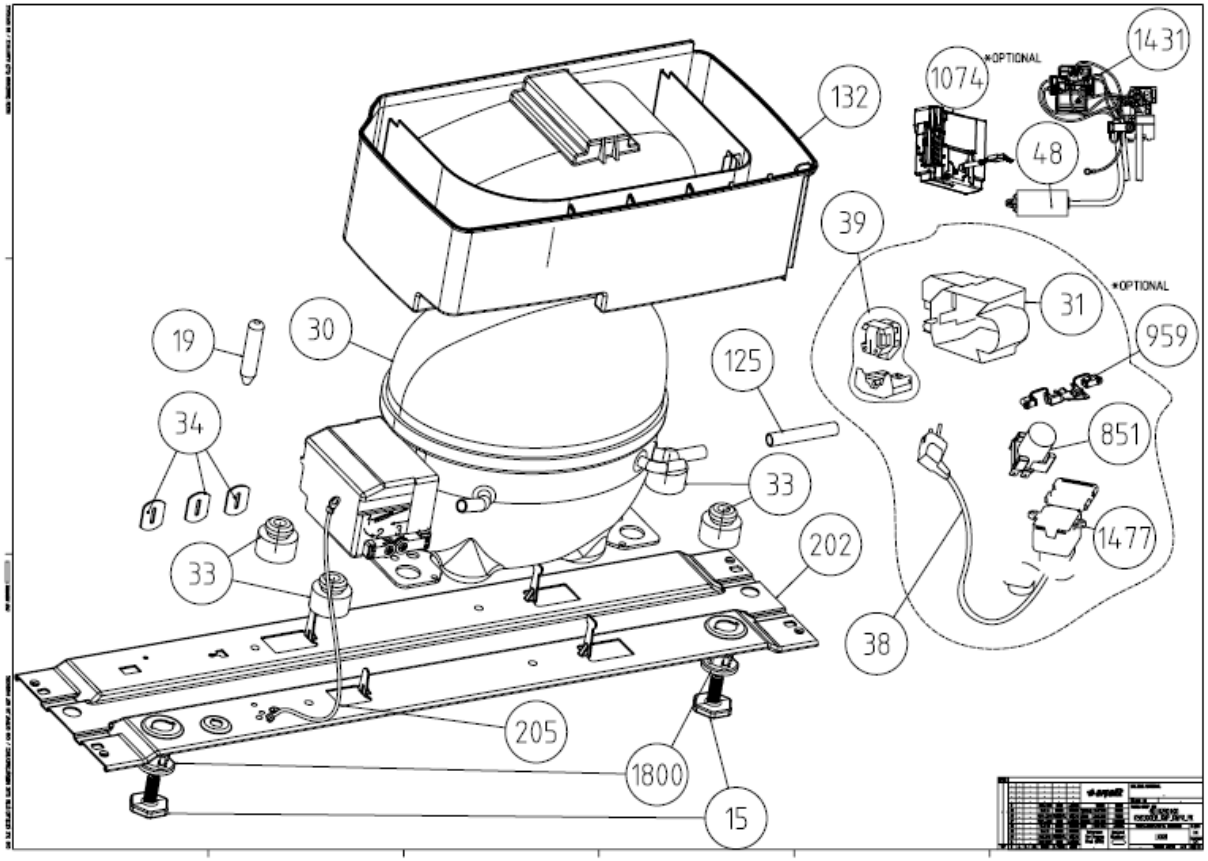

17.1.E Completely Packaged Refrigerator Pack

