GRUNDIG

Refrigerator

User manual

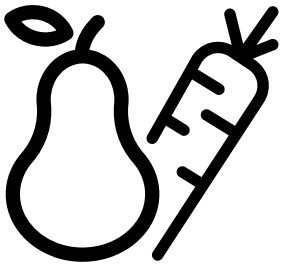

GQN213FTX-GQN213FTZ-GQN34220PZ

CE

EN /

58 5061 0000/AE

ENG

Contents

1. Important instructions for safety and environment 5

1.1 General safety 5
1.1.1 HC warning..... 8
1.1.2 For products with a water dispenser 9
1.2 Intended use..... 9
1.3 Children's safety 9
1.4 Compliance with the WEEE Directive and Disposing of the Waste Product: 10
1.5 Compliance with RoHS Directive 10
1.6 Package information 10

2 Your Refrigerator 11

3.1 Appropriate location for installation 13
3.2 Installing the plastic wedges 13
3.3* Adjusting the feet..... 14
3.4 Electric connection..... 15
3.5 Adjusting the gap between the upper door 16

4. Preparation 17

4.1 What to do for energy saving..... 17
4.2 Recommendations about the fresh food compartment 18
4.3 Initial use..... 19

5. Operating the product 20

5.1Indicator panel..... 20
5.2 Indicator panel 26
5.3 Freezing fresh food..... 29
5.4 Recommendations for preserving the frozen food 30
5.5Deep-freeze information..... 30
5.6 Placing the food..... 31
5.7 Door open warning 31
5.8 Crisper 32
5.9 Humidity-controlled crisper Everfresh+(R)..... 32
5.10Egg tray..... 32
5.11 Movable Middle Section 32
5.12 Cool Control Storage Compartment 33
5.13 Blue light/Vitamin Care Technology..... 33
5.14 Odour filter..... 34
5.15 Use of internal water dispenser and water dispenser at the door..... 34
5.16 Dispensing water..... 34
5.17 Maintaining water dispenser 35
5.18 Icematic 36
5.19 Icematic and ice storage container..... 36
5.20 Wine cellar compartment .. 37

6. Maintenance and cleaning 39

6.1 Avoiding bad odors..... 39
6.2 Protecting the plastic surfaces 39

7. Troubleshooting 40

Please read these instructions first before using your appliance

Thank you for choosing a Grundig appliance.

Please take some time to read this user manual before using your appliance, to ensure you know how to safely operate the controls and functions.

Carefully follow all unpacking and installation instructions to ensure the appliance is correctly connected and fitted prior to use.

Please write your product model and serial number on the last page of this user manual, and store in a safe location close to the appliance for easy future reference.

This user manual may also be applicable for several other models. Differences between models will be listed.

If you have any questions or concerns, please call our contact centre or find help and information online at www.grundig.co.uk

Symbols and their descriptions

This instruction manual contains the following symbols:

	Important information or useful usage tips.
	Warning against dangerous conditions for life and property.
	Warning against electric voltage.
	Packaging materials of the product are manufactured from recyclable materials in accordance with our National Environment Regulations.

INFORMATION

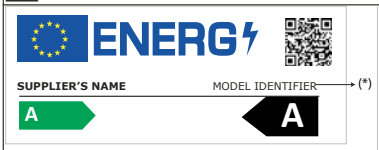

.The model information as stored in the product data base can be reached by entering following website and searching for your model identifier (*) found on energy label.

https://eprel.ec.europa.eu/

1. Important instructions for safety and environment

This section contains safety instructions that will help protect from risk of personal injury or property damage. Failure to follow these instructions shall void any warranty.

1.1 General safety

- This product can be used by children at and above 8 years old and by persons whose physical, sensory or mental capabilities were not fully developed or who lack experience and knowledge provided that they are supervised or trained on the safe usage of the product and the risks it brings out. Children must not play with the product. Cleaning and maintenance works should not be performed by children unless they are supervised by someone.
- Unplug the product if a failure occurs while it is in use.
- If the product has a failure, it should not be operated unless it is repaired by the Authorised Service Agent. There is the risk of electric shock!
- Connect the product to a grounded outlet protected by a fuse complying with the values in the rating plate. Have the grounding installation made by a qualified electrician. Our company shall not be liable for any damages that will arise when the product is used without grounding in accordance with the local regulations.
- Unplug the product when not in use.
- Never wash the product by spreading or pouring water onto it! There is the risk of electric shock!
- Never touch the plug with wet hands! Never unplug by pulling on the cable, always pull out by grabbing the plug.
- It is recommended to clean the tip of the plug regularly with a dry cloth.

- Do not plug the refrigerator if the wall outlet is loose.
- Never connect your refrigerator to electricity-saving systems. Such systems are harmful for the product.
- Unplug the product during installation, maintenance, cleaning and repairing procedures.
- Always have the installation and repairing procedures carried out by the **Authorised Service Agent**. Manufacturer shall not be held liable for damages that may arise from procedures carried out by unauthorised persons.
- Do not eat cone ice cream and ice cubes immediately after you take them out of the freezer compartment! This may cause frostbite in your mouth!
- Do not touch frozen food by hand! They may stick to your hand!
- Do not put bottled and canned liquid beverages in the freezer compartment. They may burst!
- Never use steam and steam assisted cleaning materials to clean or defrost the refrigerator. Steam will cause short circuit or electric shock since it would get into contact with the electrical parts in the refrigerator!
- The product shall never be used while the compartment which is located at the top or back of your product and in which electronic boards are available (electronic board box cover) (1) is open.

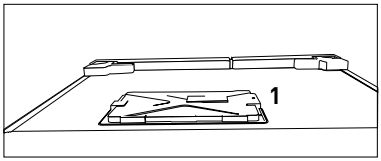

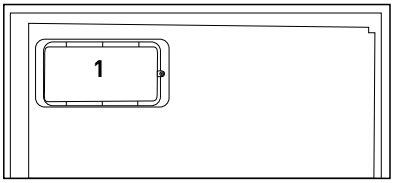

- Do not use mechanical devices or other methods to accelerate the defrosting process, other than those recommended by the manufacturer.
- Never use the parts on your refrigerator such as the door and drawer as a means of support or step. This will cause the product to tip over or parts of it get damaged.

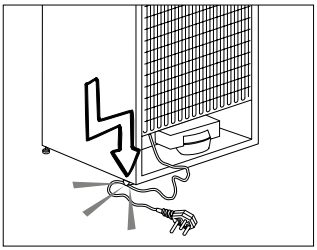

- Do not damage the cooling circuit, where the refrigerant is circulating, with drilling or cutting tools. The refrigerant that might blow out when the gas channels of the evaporator, pipe extensions or surface coatings are punctured may cause skin irritations and eye injuries.
- Do not cover or block the ventilation holes on the refrigerator with any material.
- Place the beverage with higher proofs tightly closed and vertically.
- Do not use gaseous sprays near the product since there is the risk of fire or explosion!
- Flammable items or products that contain flammable gases (e.g. spray) as well as the explosive materials should never be kept in the appliance.
- Do not place containers filled with liquid on top of the product. Spilling water on an electrical component may cause electric shocks or risk of fire.

- Do not store products (vaccines, heat-sensitive medicines, scientific materials and etc.) that require a precise temperature control in the refrigerator.
- If you will not operate the product for a long period of time, unplug and unload the food in it.
- If the product is equipped with blue light, do not look at the blue light with optical tools.
- Exposing the product to rain, snow, sun and wind is dangerous with respect to electrical safety.
- In products with mechanical control (thermostat), wait for minimum 5 minutes to plug in the product again after unplugging it.
- Do not overload the product. It may fall when the door is opened, and cause injury or damage. Similar problems may occur in case of putting things on top of the product.
- 8's door is equipped with a handle, do not pull by the handle when changing the place of the product. Handle may get loose.
- Pay attention not to have your hand or any part of your body get caught by the moving parts inside the product.

1.1.1 HC warning

- If the product is equipped with a cooling system containing R600a gas, pay attention not to damage the cooling system and piping during usage and transportation. This gas is flammable. If the cooling system is damaged, keep the product away from potential sources that can cause the system catch a fire and ventilate the room in which the unit is placed immediately.

	If the product is equipped with a cooling system containing R134a gas, ignore this warning.

	You can learn the gas used in production of your product on the rating plate located on the left inner part of it.
	**WARNING:** Never dispose the product in fire.

1.1.2For products with a water dispenser

- Pressure for cold water inlet shall be maximum 90 psi (8 bar). If your water pressure exceeds 6.2 psi (5.5 bar), use a pressure limiting valve in your mains system. If you do not know how to check your water pressure, ask for the help of a professional plumber.
- If there is risk of water hammer effect in your installation, always use a water hammer prevention equipment in your installation. Consult Professional plumbers is you are not sure that there is no water hammer effect in your installation.
- Do not install on the hot water inlet. Take precautions against of the risk of freezing of the hoses. Water temperature operating interval shall be 33°F (0.6°C) minimum and 100°F (38°C) maximum.
- Use only potable water.

1.2 Intended use

- This product has been designed for domestic use. It is not suitable for commercial use and it must not be used out of its intended use.
- Product must be used only for storing food.
- The manufacturer waives any responsibility arisen from incorrect usage or transportation.
- Original spare parts will be provided for 10 years, following the product purchasing date.

1.3 Children's safety

- Packaging materials are dangerous for the children. Keep packaging materials in a safe place away from reach of the children.

- Electrical products are dangerous for the children. Keep children away from the product when it is in use.
- If the product's door is equipped with a lock, keep the keys away from reach of children.

1.4 Compliance with the WEEE Directive and Disposing of the Waste Product:

This product complies with EU WEEE Directive (2012/19/EU). This product bears a classification symbol for waste electrical and electronic equipment (WEEE).



This symbol indicates that this product shall not be disposed with other household wastes at the end of its service life. Used device must be returned to offical collection point for recycling of electrical and electronic devices. To find these collection systems please contact to your local authorities or retailer where the product was puchased. Each household performs important role in recovering and recycling of old appliance. Appropriate disposal of used appliance helps prevent potential negative consequences for the environment and human health.

1.5 Compliance with RoHS Directive

The product you have purchased complies with EU RoHS Directive (2011/65/EU). It does not contain harmful and prohibited materials specified in the Directive.

1.6 Package information



Packaging materials of the product are manufactured from recyclable materials in accordance with our National Environment Regulations. Do not dispose of the packaging materials together with the domestic or other wastes. Take them to the packaging material collection points designated by the local authorities.

2 Your Refrigerator

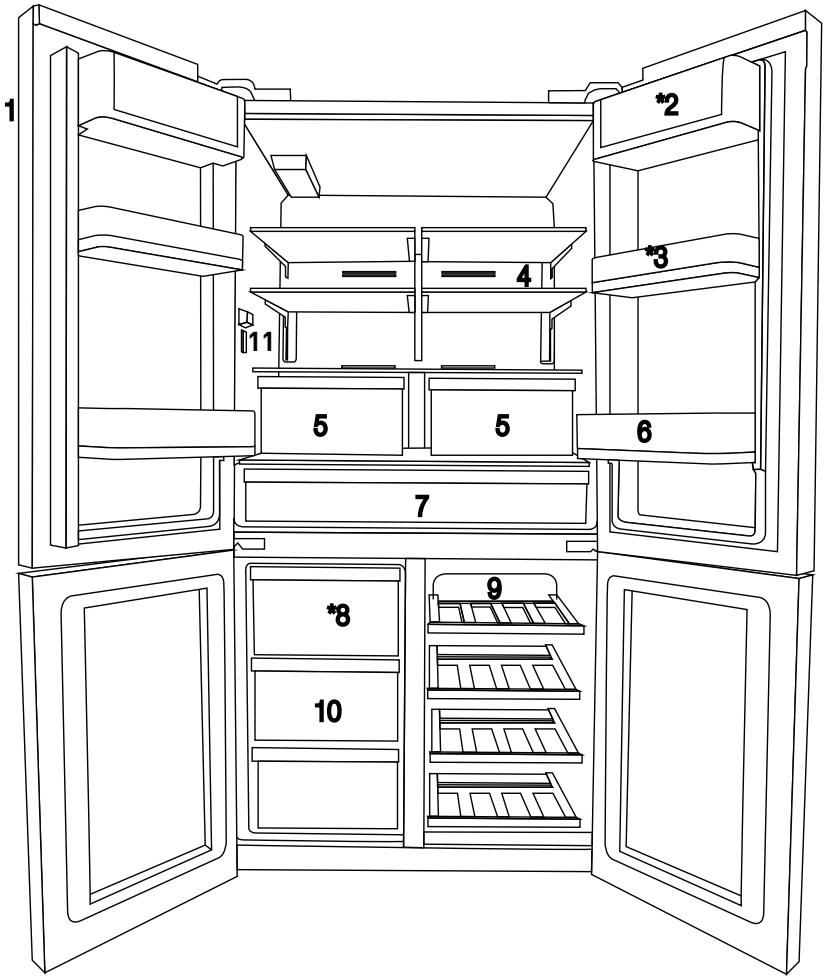

1. Control and indicator panel
2. Butter & Cheese section
3. 70 mm moving door shelf
4. Fridge compartment glass shelf
5. Fridge compartment crisper
6. Large bottle storage
7. Chiller compartment
8. Icebox drawer
9. Wine cooler
10. Freezer compartment drawers
11. Inner Water Dispenser

* OPTIONAL

Figures in this user manual are schematic and may not match the product exactly. If the subject parts are not included in the product you have purchased, then those parts are valid for other models.

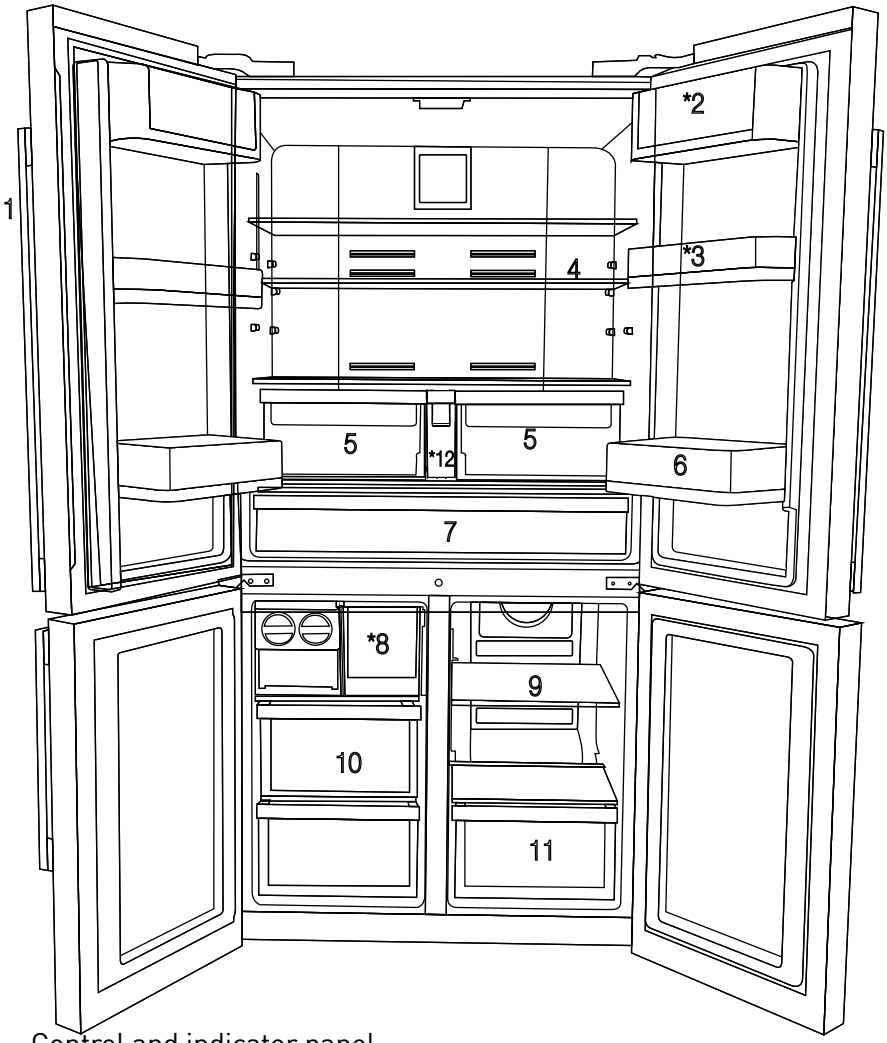

1. Control and indicator panel
2. Butter & Cheese section
3. 70 mm moving door shelf
4. Fridge compartment glass shelf
5. Fridge compartment crisper
6. Large bottle storage
7. Chiller compartment
8. Icebox drawer
9. Wine cooler
10. Freezer compartment drawers
11. Inner Water Dispenser
12. Water tank
* OPTIONAL

Figures in this user manual are schematic and may not match the product exactly. If the subject parts are not included in the product you have purchased, then those parts are valid for other models.

3.1 Appropriate location for installation

In order to prepare the product for use, refer the information in the user manual and ensure that electrical installation and water installation are appropriate. If not, call a qualified electrician and plumber to arrange the utilities as necessary.

	**WARNING:** Manufacturer shall not be held liable for damages that may arise from procedures carried out by unauthorised persons.
	**WARNING:** Product must not be plugged in during installation. Otherwise, there is the risk of death or serious injury!
	**WARNING:** : If the door clearance of the room where the product shall be placed is so tight to prevent passing of the product, remove the door of the room and pass the product through the door by turning it to its side; if this does not work, contact the authorised service agent.

- Place the product on a level floor surface to prevent jolts.
- Install the product at least 30 cm away from heat sources such as hobs, heater cores and stoves and at least 5 cm away from electrical ovens.
- Product must not be subjected to direct sun light and kept in humid places.
- Appropriate air ventilation must be provided around your product in order to achieve an efficient operation. If the product is to be placed in a recess in the wall, pay attention to leave at least 5 cm distance with the ceiling and side walls.
- Do not install the product in places where the temperature falls below -5°C.

3.2 Installing the plastic wedges

Plastic wedges supplied with the product are used to create the distance for the air circulation between the product and the rear wall.

1. To install the wedges, remove the screws on the product and use the screws supplied together with the wedges.

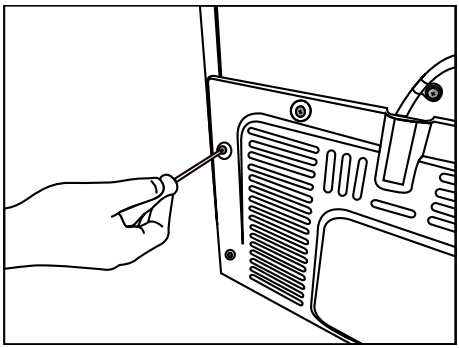

2. Insert the 2 plastic wedges onto the rear ventilation cover as illustrated in the figure.

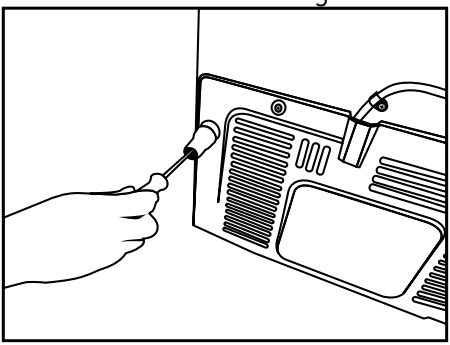

3.3* Adjusting the feet

If the product stands unbalanced after installation, adjust the feet on the front by rotating them to the right or left.

* If your product does not have a wine compartment or is not a glass door, your product does not have adjustable stands, the product has fixed stands.

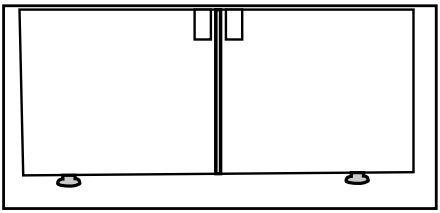

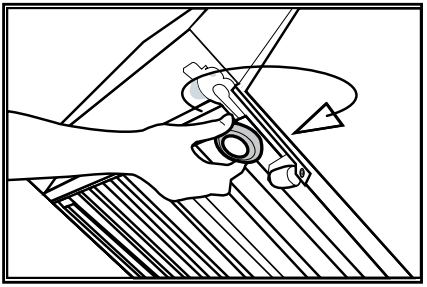

To adjust the doors vertically,
Loosen the fixing nut located at the bottom.
Rotate the adjusting nut according to the position of the door (clockwise/counter-clockwise).
Tighten the fixing nut in order to fix the position.
To adjust the doors horizontally,
Loosen the fixing nut located at the top.
Rotate the side adjusting nut according to the position of the door (clockwise/counter-clockwise).
Tighten the fixing nut which is at the top in order to fix the position.

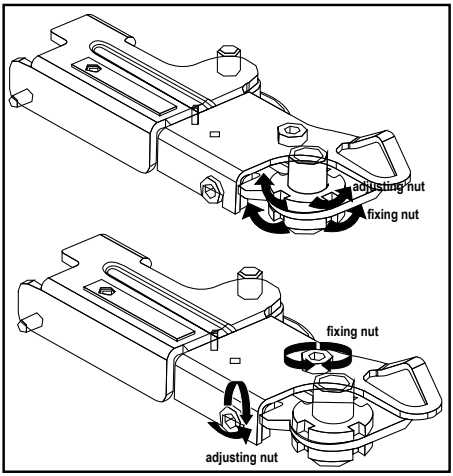

-Upper hinge group is fixed with 3 screws.
-The hinge cover is attached after the sockets are installed.
- Then the hinge cover is fixed with two screws.

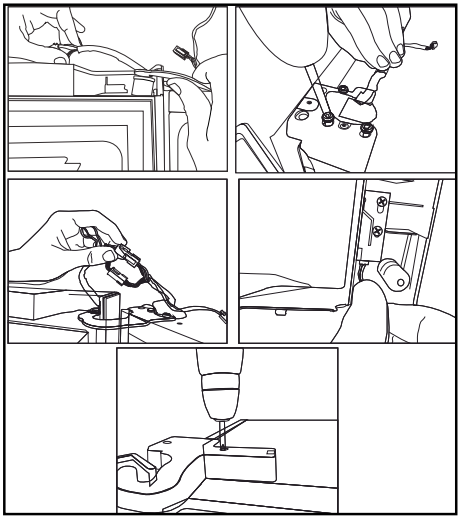

3.4 Electric connection

	WARNING: Do not make connections via extension cables or multi-plugs.
	WARNING: Damaged power cable must be replaced by the Authorised Service Agent.
	If two coolers are to be installed side by side, there should be at least 4 cm distance between them.

- Manufacturer shall not be liable for any damages that will arise when the product is used without grounding and electrical connection in accordance with the national regulations.
- Power cable plug must be within easy reach after installation.
- Do not use extension cords or multiple outlets between your product and the wall outlet.

3.5 Adjusting the gap between the upper door

• You can adjust the gap between the fridge compartment doors as illustrated in the figures.

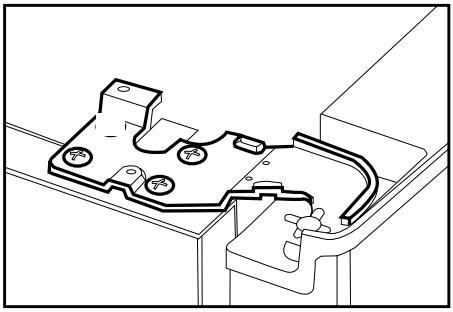

• Adjust the door as you desire by loosing the screws.

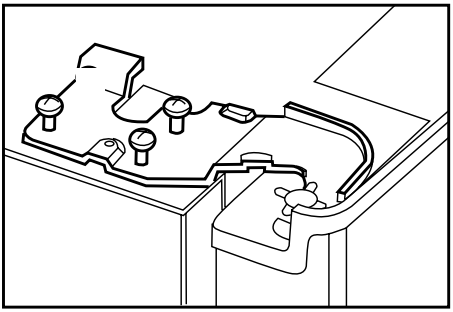

• Fix the door you have adjusted by tightening the screws without changing the position of the door.

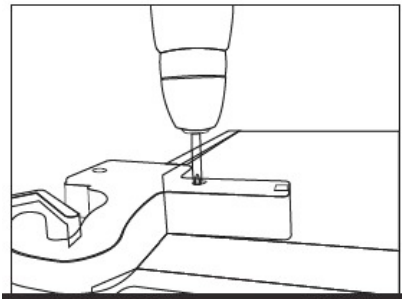

Door shelves should be empty when adjusting the door height.
Using a screwdriver, remove two screws of upper hinge cover of the door you want to adjust.

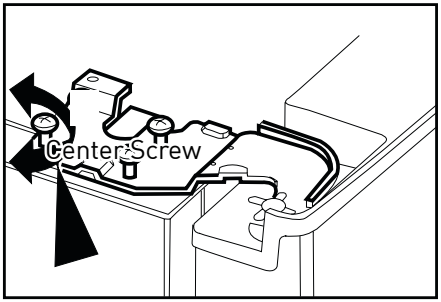

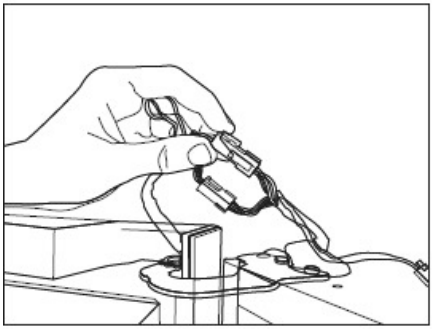

The hinge cover is attached after the sockets are installed.
Replace the hinge cover and fix with two screws.

4. Preparation

4.1 What to do for energy saving



Connecting the product to electric energy saving systems is risky as it may cause damage on the product.

- for a freestanding appliance; 'this refrigerating appliance is not intended to be used as a built-in appliance.
- Do not leave the doors of your refrigerator open for a long time.
- Do not put hot food or drinks in your refrigerator.
- Do not overload the refrigerator. Cooling capacity will fall when the air circulation in the refrigerator is hindered.
- Since hot and humid air will not directly penetrate into your product when the doors are not opened, your product will optimize itself in conditions sufficient to protect your food. Functions and components such as compressor, fan, heater, defrost, lighting, display and so on will operate according to the needs to consume minimum energy under these circumstances.
- Do not place the refrigerator in places subject to direct sunlight. Install the product at least 30 cm away from heat sources such as hobs, ovens, heater units and stoves and at least 5 cm away from electrical ovens.
- Pay attention to store your food in refrigerator in closed containers.
- To be able store maximum food in the freezer compartment of your refrigerator, the upper drawer has to be removed and placed on top of glass shelf. Power consumption stated for your refrigerator has been determined after removing the icematic and the upper drawers as to allow maximum loading. It is strongly recommended to use the lower drawers in the freezer and the multizone compartment while loading.

- Airflow should not be blocked by placing foods in front of the freezer and the multizone compartment fans. Foods should be loaded by leaving minimum 5 cm space in front of the protective fan grid.
- Thawing the frozen foods in the fridge compartment both saves energy and reserves the quality of the foods.

	Temperature of the room where your refrigerator is located should at least be 10°C /50°F. Operating your refrigerator under cooler conditions is not recommended with regard to its efficiency.

	Inside of your refrigerator must be cleaned thoroughly.
	If two coolers are to be installed side by side, there should be at least 4 cm distance between them.

4.2 Recommendations about the fresh food compartment

- Make sure that the food does not touch the temperature sensor in fresh food compartment. To allow the fresh food compartment to keep its ideal storage temperature, the sensor must not be hindered by food.
- Do not place hot foods or beverages inside the product.

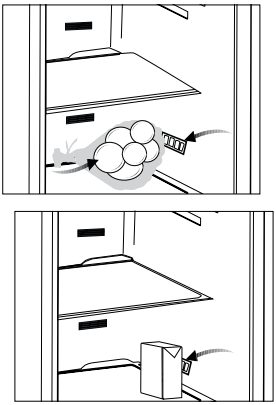

4.3 Initial use

Before using the product, make sure that all preparations have been made in accordance with the instructions given in the "Important instructions regarding safety and environment" and "Installation" chapters.

- Clean the interior of the refrigerator as recommended in the "Maintenance and cleaning" section. Before you start the refrigerator, make sure that the interior is dry.
- Plug the refrigerator in a grounded socket. The interior illumination is lit when the door of the refrigerator is opened.
- Operate the refrigerator for 6 hours without placing any food in it and do not open its door unless it is necessary.

	You will hear a noise when the compressor starts up. The liquids and gases sealed within the refrigeration system may also give rise to noise, even if the compressor is not running and this is quite normal.
	Front edges of the refrigerator may feel warm. This is normal. These areas are designed to be warm to avoid condensation.

5. Operating the product

5.1Indicator panel

Touch-controlled indicator panel allows you to set the temperature and control the other functions related to the refrigerator without opening the door of the product. Just press the relevant buttons for function settings.

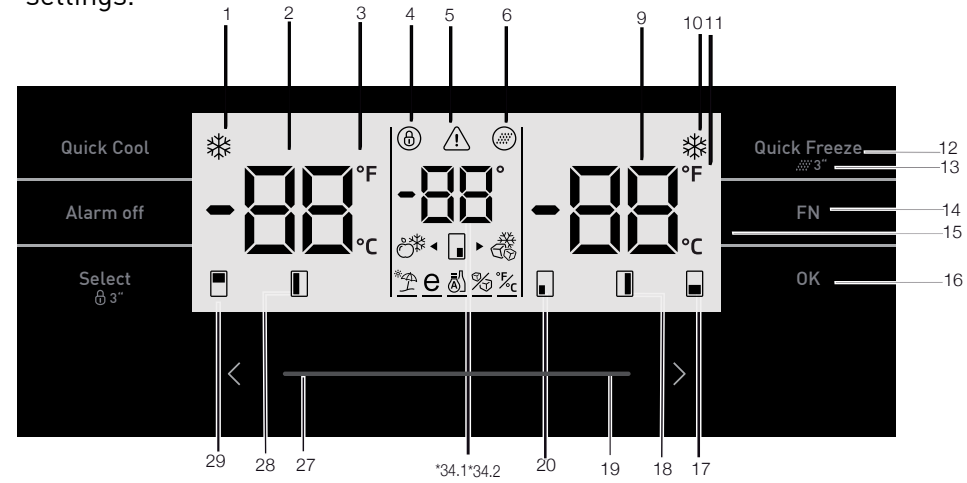

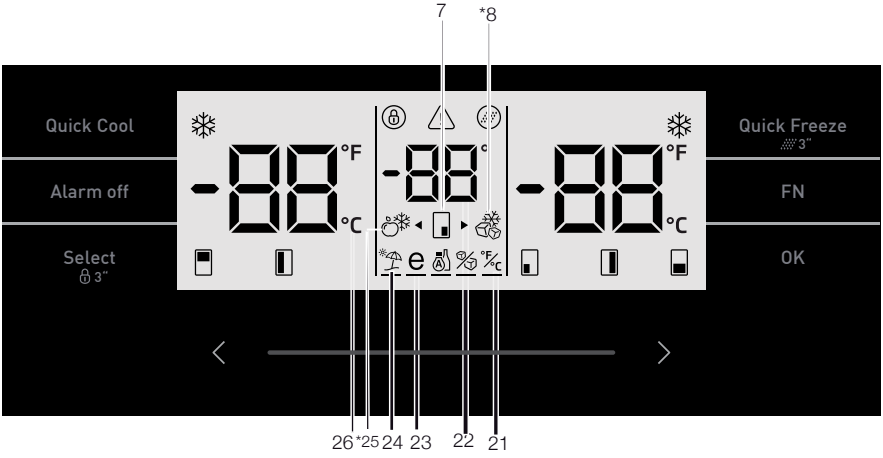

* Figures in this user manual are schematic and may not match the product exactly. If the subject parts are not included in the product you have purchased, then those parts are valid for other models.

1. Quick cooling function indicator
It turns on when the quick fridge function is activated.

2. Fridge compartment temperature indicator
Temperature of the fridge compartment is shown; it can be set to 8,7,6,5,4,3,2,1.

3. Fahrenheit indicator
It is a Fahrenheit indicator. When the Fahrenheit indication is activated, the temperature set values are shown in Fahrenheit and the relevant icon turns on.

4. Key lock
Press key lock button (Select) continuously for 3 seconds. Key lock symbol will light up and key lock mode will be activated. Buttons will not function if the Key lock mode is active. Press key lock button continuously for 3 seconds again. Key lock symbol will turn off and the key lock mode will be exited. Press the key lock button if you want to prevent changing of the temperature setting of the refrigerator.

5. Power failure/High temperature / error warning
This indicator illuminates during power failure, high temperature failures and error warnings. During long-term power failures, the highest temperature value that the freezer compartment reaches will blink on the digital display. After checking the food located in the freezer compartment, press the alarm off button to clear the warning.
Please refer to "solutions recommended for troubleshooting" section on your manual if you observe that this indicator is illuminated.

6. Filter reset icon
This icon turns on when the filter needs to be replaced.

7. Temperature change cabin icon
Indicates the cabin whose temperature is to be changed. When the temperature change cabin icon starts flashing, it is understood that the relevant cabin has been selected.

8. * Joker freezer icon
Hover over the Joker freezer icon using the FN button; the icon will start to flash. When you press the OK key, joker cabin freezer icon turn on and operates as a freezer.

9. Freezer compartment temperature indicator
Temperature of the fridge compartment is shown; it can be set to -18, -19, -20, -21, -22, -23, -24.

10. Quick freeze function indicator
It turns on when the quick freeze function is activated.

11. Fahrenheit indicator
It is a Fahrenheit indicator. When the Fahrenheit indication is activated, the temperature set values are shown in Fahrenheit and the relevant icon turns on.

12. Quick freeze function button
Press this button to activate or deactivate the quick freeze function. When you activate the function, the freezer compartment will be cooled to a temperature lower than the set value.

	Use the quick freeze function when you want to quickly freeze the food placed in freezer compartment. If you want to freeze large amounts of fresh food, activate this function before putting the food into the product.
	If you do not cancel it, Quick Freeze will cancel itself automatically after 24 hours at the most or when the fridge compartment reaches to the required temperature.
	This function is not recalled when power restores after a power failure.

13. Filter reset
The filter is reset when the quick freeze button is pressed for 3 seconds. Filter change icon goes off.

14. FN button
Using this key, you can switch between the functions that you want to select. Upon pressing this key, the icon, whose function is required to be activated or deactivated, and this icon's indicator starts flashing. The FN button gets deactivated if not pressed for 20 seconds. You need to press this button to change the functions again.

15. Celsius indicator
It is a Celsius indicator. When the Celsius indication is activated, the temperature set values are shown in Celsius and the relevant icon turns on.

16. OK button
After navigating the functions using the FN button, the OK button is used to select the functions required.

17. Temperature change cabin icon
Indicates the cabin whose temperature is to be changed. When the temperature change cabin icon starts flashing, it is understood that the relevant cabin has been selected.

18. * Temperature change cabin icon
Indicates the cabin whose temperature is to be changed. When the temperature change cabin icon starts flashing, it is understood that the relevant cabin has been selected.

19. Set increasing button
Select the relevant cabin with the select button; the cabin icon representing the relevant cabin will start to flash. If you press the set increasing button during this process, the set value gets increased. If you keep pressing it in a loop, the set value returns to the beginning.

20. Temperature change cabin icon
Indicates the cabin whose temperature is to be changed. When the temperature change cabin icon starts flashing, it is understood that the relevant cabin has been selected.

21. Setting the Celsius and Fahrenheit indicator
Hover over this key using the FN key and select Fahrenheit and Celsius via the OK key. When the relevant temperature type is selected, the Fahrenheit and Celsius indicator turns on.

22. Ice machine off icon

Press the FN key (until it reaches the ice icon and the lower line) to switch off the ice machine. The ice machine off icon and the ice machine function indicator start flashing when you hover over them, thus you can understand whether the ice machine will be turned on or off. When you press the OK button, the ice machine icon lights continuously and the Indicator continues to flash during this process. If you do not press any button after 20 seconds, the icon and the indicator remains on. Thus, the ice machine is switched off. In order to switch on the ice machine again, hover over the icon and the indicator; thus, both the ice machine off icon and the indicator will start flashing. If you do not press any button within 20 seconds, the icon and the indicator will go off and thus the ice machine will be switched on again.

	Indicates whether the icematic is on or off.

	Water flow from water tank will stop when this function is selected. However, ice made previously can be taken from the icematic.

23. Eco fuzzy function icon

Press the FN key (until it reaches the letter e icon and the lower line) to activate the eco fuzzy. When you hover over the eco fuzzy icon and the eco fuzzy function indicator, they start flashing. Thus, you can understand whether the eco fuzzy function will be activated or deactivated. When you press the OK button, the eco fuzzy function icon lights continuously and the Indicator continues to flash during this process. If you do not press any button after 20 seconds, the icon and the indicator remains on. Thus, the eco fuzzy function is activated. In order to cancel the eco fuzzy function, hover over the icon and the indicator again and press the OK key. Thus, both the eco fuzzy function icon and the indicator will start flashing. If you do not press any button within 20 seconds, the icon and the indicator will go off and the eco fuzzy function will be cancelled.

24. Vacation function icon

Press the FN key (until it reaches the umbrella icon and the lower line) to activate the vacation function. When you hover over the vacation function icon and the vacation function indicator, they start flashing. Thus, you can understand whether the vacation function will be activated or deactivated. When you press the OK button, the vacation function icon lights continuously and thus the Vacation function is activated. The Indicator continues to flash during this process. Press the OK key to cancel the vacation function. Thus, both the vacation function icon and the indicator will start flashing and the vacation function will be cancelled.

25. * Joker fridge icon

When you select the joker fridge icon using the FN button and press the OK key, the joker cabin turns into a fridge cabin and operates as a cooler.

26. Celsius indicator
It is a Celsius indicator. When the Celsius indication is activated, the temperature set values are shown in Celsius and the relevant icon turns on.

27. Set decreasing function
Select the relevant cabin with the select button; the cabin icon representing the relevant cabin will start to flash. If you press the set decreasing button during this process, the set value gets decreased. If you keep pressing it in a loop, the set value returns to the beginning.

28. * Temperature change cabin icon

Indicates the cabin whose temperature is to be changed. When the temperature change cabin icon starts flashing, it is understood that the relevant cabin has been selected.

29. Temperature change cabin icon
Indicates the cabin whose temperature is to be changed. When the temperature change cabin icon starts flashing, it is understood that the relevant cabin has been selected.

30. Key lock
Press key lock button simultaneously for 3 seconds. Key lock symbol will light up and key lock mode will be activated. Buttons will not function if the Key lock mode is active. Press key lock button simultaneously for 3 seconds again. Key lock symbol will turn off and the key lock mode will be exited.

Press the **key lock** button if you want to prevent changing of the temperature setting of the refrigerator.

31.Select button
Use this button to select the cabin whose temperature you want to change. Switch between the cabins by pressing this button. The selected cabin can be understood from the cabin icons (7,17,18,20,28,29). Whichever cabin icon is flashing, the cabin, whose temperature set value you want to change, is selected. Then, you can change the set value by pressing the cabin set value decreasing button (27) and the cabin set value increasing button (19). If you do not press the select button for 20 seconds, the cabin icons will go off. You need to press this key to select a cabin again.

32. Alarm off warning
In case of power failure/high temperature alarm, after checking the foods in the freezer compartment, press the alarm off button to clear the warning.

33. Quick cooling function button
The button has two functions. To activate or deactivate the quick cool function, press it briefly. Quick Cool indicator will turn off and the product will return to its normal settings.

	Use quick cooling function when you want to quickly cool the food placed in the fridge compartment. If you want to cool large amounts of fresh food, activate this function before putting the food into the product.
	If you do not cancel it, quick cooling will cancel itself automatically after 1 hours at the most or when the fridge compartment reaches to the required temperature.
	If you press the quick cooling button repeatedly with short intervals, the electronic circuit protection will be activated and the compressor will not start up immediately.
	This function is not recalled when power restores after a power failure.

34. 1 Joker temperature indicator
Temperature set values of the joker cabin are displayed.

34. 2 Wine cooler compartment tempature indicator
Temperature set values of the winecabin are displayed.

5.2 Indicator panel

Touch-control indicator panel allows you to set the temperature and control the other functions related to the refrigerator. Just press the relevant buttons for function settings.

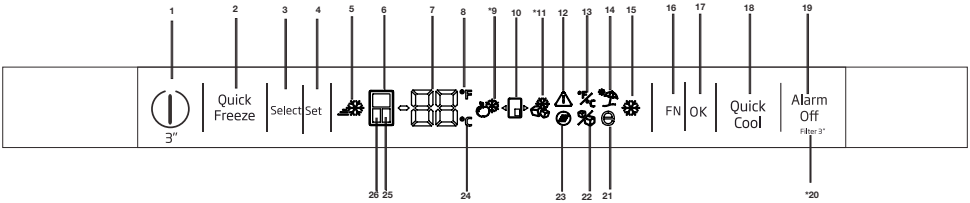

1-On/Off function
Press the On/Off button for 3 seconds to turn off or turn on the fridge.

2. Quick freeze function button
Press this button to activate or deactivate the quick freeze function. When you activate the function, the freezer compartment will be cooled to a temperature lower than the set value.

	Use the quick freeze function when you want to quickly freeze the food placed in freezer compartment. If you want to freeze large amounts of fresh food, activate this function before putting the food into the product.

	If you do not cancel it, Quick Freeze will cancel itself automatically after 24 hours at the most or when the fridge compartment reaches to the required temperature.
	This function is not recalled when power restores after a power failure.

3.Select button
Use this button to select the cabin whose temperature you want to change. Switch between the cabins by pressing this button. The selected cabin can be understood from the cabin icons (6, 25, 24). Whichever cabin icon is power on, the cabin, whose temperature set value you want to change, is selected. Then, you can change the set value by pressing the cabin set value Temperature Adjustment button (4)

4.Temperature Adjustment / Temperature Decrease
When pressed, decreases the temperature of the selected compartment.

5-Quick freeze Indicator
This icon lits when the Quick freeze function is active.

6. Fridge compartment indicator
When this indicator is active, the temperate of the fridge compartment is displayed on the temperature value indicator.Fridge compartment can be set to 8, 7, 6, 5, 4, 3, 2 or 1°C / 46, 45, 44, 43, 42, 41, 40,39,38,37,36,35,34 or 33°F by pressing Temperature Adjustment button (4).

7. Temperature value indicator
Shows the temperature value of the selected compartment.

8. Fahrenheit indicator
It is a Fahrenheit indicator. When the Fahrenheit indication is activated, the temperature set values are shown in Fahrenheit and the relevant icon turns on.

9. Joker fridge icon
When you select the joker fridge icon using the FN button (16) and press the OK button (17) the joker cabin turns into a fridge cabin and operates as a cooler.

10. Joker cabin icon
It shows joker cabin icon.

11. Joker freezer icon
When you select the joker freezer icon using the FN button (16) and press the OK button (17) the joker cabin turns into a freezer cabin and operates as a freezer.

12. Power failure/High temperature / error warning
This indicator illuminates during power failure, high temperature failures and error warnings. During long-term power failures, the highest temperature value that the freezer compartment reaches will blink on the digital display. After checking the food located in the freezer compartment, press the alarm off button (19) to clear the warning.

13.Setting the Celsius and Fahrenheit indicator
Hover over this key using the FN key and select Fahrenheit and Celsius via the OK key. When the relevant temperature type is selected, the Fahrenheit and Celsius indicator turns on.

14. Vacation function icon
Press the FN key (until it reaches the umbrella icon) to activate the vacation function. When you hover over the vacation function icon, it start flashing. Thus, you can understand whether the vacation function will be activated or deactivated. When you press the OK button, the vacation function indicator lights continuously and thus the Vacation function is activated. Press the OK key to cancel the vacation function. Thus, the vacation function indicator will start flashing and the vacation function will be cancelled.

15. Quick cooling function indicator
It turns on when the quick fridge function is activated.

16. FN button
Using this key, you can switch between the functions that you want to select. Upon pressing this key, the icon, whose function is required to be activated or deactivated, and this icon's indicator starts flashing. The FN button gets deactivated if not pressed for 20 seconds. You need to press this button to change the functions again.

17. OK button
After navigating the functions using the FN button, when the function is cancelled via the OK button, the relevant indicator flashes. When the function is activated, it remains on. The indicator continues to flash in order to show the icon it is on.

18. Quick cooling function button
The button has two functions. To activate or deactivate the quick cool function, press it briefly. Quick Cool indicator will turn off and the product will return to its normal settings.

19. Alarm off warning
In case of power failure/high temperature alarm, after checking the foods in the freezer compartment, press the alarm off button to clear the High temperature warning icon (12).

20. Filter reset
The filter is reset when the alarm off button (19) is pressed for 3 seconds. Filter reset icon goes off.

21. Eco fuzzy function icon
Press the FN key (until it reaches the letter e icon) to activate the eco fuzzy. When you hover over the eco fuzzy icon it start flashing. Thus, you can understand whether the eco fuzzy function will be activated or deactivated. When you press the OK button, the eco fuzzy function icon lights continuously during this process. If you do not press any button after 20 seconds, the icon remains on. Thus, the eco fuzzy function is activated. In order to cancel the eco fuzzy function, hover over the icon again and press the OK key. Thus, the eco fuzzy function icon will start flashing. If you do not press any button within 20 seconds, the icon will go off and the eco fuzzy function will be cancelled.

22. Ice machine off icon
Press the FN key (until it reaches the ice icon) to switch off the ice machine. The ice machine off icon start flashing when you hover over it, thus you can understand whether the ice machine will be turned on or off. When you press the OK button, the ice machine icon lights continuously during this process. If you do not press any button after 20 seconds, the icon and the indicator remains on. Thus, the ice machine is switched off. In order to switch on the ice machine again, hover over the icon. The ice machine off icon will start flashing. If you press ok button, the icon will go off and thus the ice machine will be switched on again.

	Indicates whether the icematic is on or off.

Water flow from water tank will stop when this function is selected. However, ice made previously can be taken from the icematic.

23. Filter reset icon
This icon turns on when the filter needs to be reset.

24. Celsius indicator
It is a Celsius indicator. When the Celsius indication is activated, the temperature set values are shown in Celsius and the relevant icon turns on.

25. Joker compartment indicator
When this indicator is active, the temperate of the joker compartment is displayed on the temperature value indicator. Joker compartment set values change by pressing Temperature Adjustment button (4).

26. Freezer compartment indicator
When this indicator is active, the temperate of the freezer compartment is displayed on the temperature value indicator. Freezer compartment can be set to -16, -18, -19, -20, -21, -22 and -24 °C /0, -2, -4, -6, -8, -10 and -12°F by pressing Temperature Adjustment button (3).

5.3 Freezing fresh food

- In order to preserve the quality of the food, it shall be frozen as quickly as possible when it is placed in the freezer compartment, use the fast freezing feature for this purpose.
- You may store the food longer in freezer compartment when you freeze them while they are fresh.
- Pack the food to be frozen and close the packing so that it would not allow entrance of air.
- Ensure that you pack your food before putting them in the freezer. Use freezer containers, foils and moisture-proof papers, plastic bags and other packing materials instead of traditional packing papers.
- Label each pack of food by adding the date before freezing. You may distinguish the freshness of each food pack in this way when you open your freezer each time. Store the food frozen before in the front side of compartment to ensure that they are used first.

Freezer Compartment Setting	Fridge Compartment Setting	Remarks
-18°C	4°C	This is the normal recommended setting.
-20, -22 or -24°C	4°C	These settings are recommended when the ambient temperature exceeds 30°C.
Quick Freeze	4°C	Use when you wish to freeze your food in a short time. Your product will return to its previous mode when the process is over.
-18°C or colder	2°C	Use these settings if you think that your fridge compartment is not cold enough because of the hot ambient conditions or frequent opening and closing of the door.

- Frozen food must be used immediately after they are thawed and they should not be re-frozen.
- Do not freeze too large quantities of food at one time.
- «24 hours before freezing the fresh food, activate “Quick Freeze Function”.
  The fresh food packages should be placed in bottom drawers.
  After placing fresh food packages, activate “Quick Freeze Function” again.
  When the freezer cabinet is set to quick function, joker cabinet is also set to quick function automatically.
  «

5.4 Recommendations for preserving the frozen food

Compartment shall be set to -18°C at least.

1. Put packages in the freezer as quickly as possible after purchase without allowing the to thaw.
2. Check whether the "Use By" and "Best Before" dates on the packaging are expired or not before freezing it.
3. Ensure that the package of the food is not damaged.

5.5Deep-freeze information

According to IEC 62552 standards, the product shall freeze at least 4.5 kg of food at 25°C ambient temperature to -18°C or lower within 24 hours for every 100-litres of freezer volume.
It is possible to preserve the food for a long time only at -18°C or lower temperatures.

You can keep the freshness of food for many months (at -18°C or lower temperatures in the deep freeze).
Foods to be frozen should not be allowed to come in contact with the previously frozen items to prevent them from getting thawed partially. Boil the vegetables and drain their water in order to store vegetables for a longer time as frozen. After draining their water, put them in air-proof packages and place them inside the freezer. Food such as bananas, tomatoes, lettuce, celery, boiled eggs, potatoes are not suitable for freezing. When these foods are frozen, only their nutritional value and taste shall be affected negatively. They shall not be spoiled so that they would create a risk for human health.

5.6 Placing the food

Freezer compartment shelves	Various frozen food such as meat, fish, ice cream, vegetables and etc.
Refrigerator compartment shelves	Food in pans, covered plates and closed containers, eggs (in closed container)
Door shelves of fridge compartment	Small and packaged food or beverage
Crisper	Vegetables and fruits
Fresh zone compartment	Delicatessen (breakfast food, meat products that shall be consumed in a short time)

5.7 Door open warning

(This feature is optional)
An audio warning signal will be given when the door of your product is left open for 1 minute. This warning will be muted when the door is closed or any of the display buttons (if any) are pressed.

5.8 Crisper

Crisper of the refrigerator is designed specially to keep the vegetables fresh without losing their humidity. For this purpose, cool air circulation is intensified around the crisper in general. Remove the door shelves that stand against the crisper before removing the crisper.

5.9 Humidity-controlled crisper Everfresh+(R)

Humidity rates of fruits and vegetables are kept under control thanks to the humidity-controlled crisper and thus the food is ensured to stay fresh for a longer period.
We recommend that you place leafy vegetables such as lettuce and spinach and vegetables sensitive to humidity loss as horizontally as possible when putting them in the crisper; not in a horizontal position on their roots. While the vegetables are being replaced, their specific weights should be taken into consideration. Heavy and hard vegetables must be placed at the bottom of the crisper and light and soft vegetables must be on the upper part.
Never leave the vegetables in their plastic bags in the crisper. If they are left in their plastic bags, this will cause them to decompose in a short period of time. If you not prefer the vegetable to get in contact with other vegetables for hygienic reasons, use perforated paper or a similar material instead of plastic bags.

Do not place pears, apricots, peaches etc., especially those fruits that generate large amounts of ethylene, in the same crisper with other fruits and vegetables. The ethylene gas emitted by these fruits cause other fruits to ripen sooner and to rot in a shorter span of time.

5.10Egg tray

You can install the egg holder to the desired door or body shelf. Never keep the egg holder in the freezer compartment.

5.11 Movable Middle Section

Movable middle section is intended to prevent the cold air inside your refrigerator from escaping outside.

1. Sealing is provided when the gaskets on the door presses on the surface of the movable middle section while the fridge compartment doors are closed.
2. Another reason that your refrigerator is equipped with a movable middle section is that it increases the net volume of the fridge compartment. Standard middle sections occupy some non-usable volume in the refrigerator.
3. Movable middle section is closed when the left door of the fridge compartment is opened.

4. It must not be opened manually. It moves under the guidance of the plastic part on the body while the door is closed.

The feature of switching to a Fridge or Freezer compartment is provided by a cooling element located in the closed section (Compressor Compartment) behind the refrigerator. During operation of this element, sounds similar to the sound of seconds heard from an analogue clock may be heard. This is normal and is not fault cause.

5.12 Cool Control Storage Compartment

***May not be available in all models**

The Cool Control Storage Compartment of your refrigerator may be used in any desired mode by adjusting it to fridge (2/4/6/8 °C) or freezer (-18/-20/-22/-24) temperatures. You can keep the compartment at the desired temperature with the Cool Control Storage Compartment's Temperature Setting Button. The temperature of the Cool Control Storage Compartment may be set to 0 and 10 degrees in addition to the fridge compartment temperatures and to -6 degrees in addition to the freezer compartment temperatures. 0 degree is used to store the deli products longer, and -6 degrees is used to keep the meats up to 2 weeks in an easily sliceable condition.

The feature of switching to a Fridge or Freezer compartment is provided by a cooling element located in the closed section (Compressor Compartment) behind the refrigerator. During operation of this element, sounds similar to the sound of seconds heard from an analogue clock may be heard. This is normal and is not fault cause.

5.13 Blue light/Vitamin Care Technology

***May not be available in all models**

For the blue light,

Fruits and vegetables stored in the crispers that are illuminated with a blue light continue their photosynthesis by means of the wavelength effect of blue light and thus preserve their vitamin C content longer.

For VitaminCare+,

Fruits and vegetables stored in crispers illuminated with the VitaminCare+ technology preserve their vitamin A and C content for a longer time thanks to the blue, green, red lights and dark cycles, which simulate a day cycle.

With this technology, you can keep your fruits & vegetables tasty & healthy longer which helps you to minimize food waste at home.

If you open the door of the refrigerator during the dark period of the VitaminCare+ technology, the refrigerator will automatically detect this and enable the blue, green or red light to illuminate the crisper for your convenience. After you have closed the door of the refrigerator, the dark period will continue, representing the night time in a day cycle.

5.14 Odour filter

Odour filter in the air duct of the fridge compartment prevents build-up of unpleasant odours in the refrigerator.

5.15 Use of internal water dispenser and water dispenser at the door

(in some models)

After connecting the refrigerator to a water source or replacing the water filter, flush the water system. Use a sturdy container to depress and hold the water dispenser lever for 5 seconds, then release it for 5 seconds. Repeat until water begins to flow. Once water begins to flow, continue depressing and releasing the dispenser paddle (5 seconds on, 5 seconds off) until a total of 4 gal. (15L) has been dispensed. This will flush air from the filter and water dispensing system, and prepare the water filter for use. Additional flushing may be required in some households. As air is cleared from the system, water may spurt out of the dispenser.
Allow 24 hours for the refrigerator to cool down and chill water.
Dispense enough water every week to maintain a fresh supply.

After 5 minutes of continuous dispensing, the dispenser will stop dispensing water to avoid flooding. To continue dispensing, press the dispenser paddle again.

Water dispenser at the door (in some models)

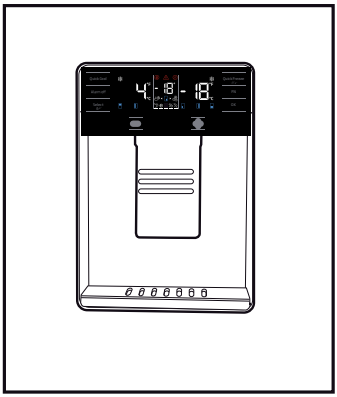

5.16 Dispensing water

Hold a container under the dispenser spout while pressing the dispenser pad.
Release the dispenser pad to stop dispensing.

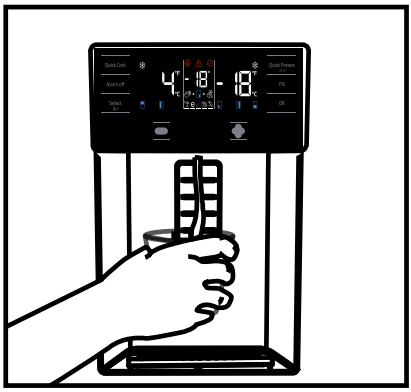

Built-in water dispenser (in some models)

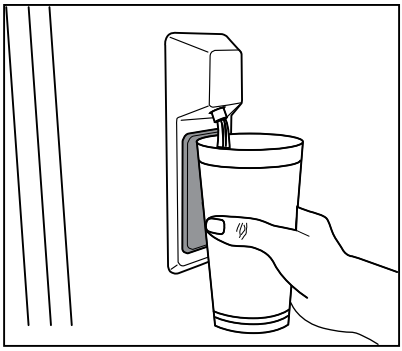

	It is normal for the first few glasses of water taken from the dispenser to be warm.
	If the water dispenser is not used for a long period of time, dispose of first few glasses of water to obtain fresh water.

During initial use, you will have to wait approximately 24 hours for the water to cool down.
Take out the glass a little while after you pull the trigger.

5.17 Maintaining water dispenser

⚠	Before using your fridge first time and after replacing your water filter, water dispenser may drip drops of water. To prevent water dripping or leaking from dispenser, please bleed the air from the system by dispensing 5-6 gallons (about 20 liter) of water through the water dispenser before the first use and every time after you change the water filter. This will remove any air trapped in the system and stop the water dispenser from leaking. Checking coupler position and the straightness of water line at the back of the unit will be required if there's an obstruction in water flow.

	If your water dispenser is leaking just a few drops of water after you have dispensed some water, this is normal.

5.18 Icematic

(in some models)

To get ice from the icematic, fill the water tank in the fridge compartment with water up to the maximum level.

Ice cubes in the ice drawer may stick to each other and become a bulk due to hot and humid air in approximately 15 days. This is normal. If you cannot break the bulk apart, you can empty the ice container and make ice again.

	It is recommended to change the water in the water tank if it remains in the water tank for more then 2-3 weeks.

	Strange noises you hear from the refrigerator at 120-minute intervals are the sounds of ice-making and pouring. This is normal.

	If you do not want to make ice, press the Ice off icon to stop the icematic to save energy and prolong the service life of your refrigerator.

	It is normal that a few drops of water drop from the dispenser after you have taken water.

5.19 Icematic and ice storage container

(in some models)

Using the Icematic

Fill the Icematic with water and place it into its seat. Your ice will be ready approximately in two hours. Do not remove the Icematic from its seating to take ice.

Turn the knobs on the ice reservoirs clockwise by 90 degrees.

Ice cubes in the reservoirs will fall down into the ice storage container below.

You may take out the ice storage container and serve the ice cubes. If you wish, you may keep the ice cubes in the ice storage container.

Ice storage container

Ice storage container is only intended for accumulating the ice cubes. Do not put water in it. Otherwise, it will break.

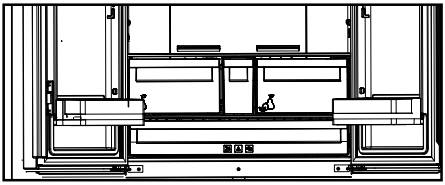

5.20 Wine cellar compartment

1 – Fill your cellar compartment

Wine cellar was built to contain up to 28 front bottles + 3 bottles accessible using a telescopic rack. These maximum quantities declared are given for information purpose only and correspond to tests carried out with a "Bordelaise 75cl" standard bottle.

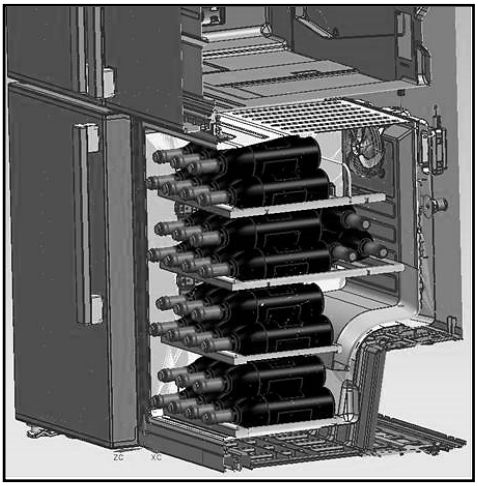

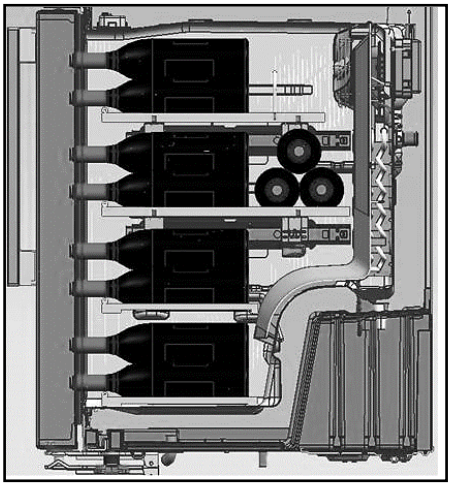

2- Suggested optimum service temperatures

Our advice: If you mix different types of wines, choose a 12 ° Celsius setting just like in a real cellar. For white wines, which are to be served between 6 and 10 °, think of putting your bottles in the refrigerator 1/2 hour before serving, the refrigerator will be able to maintain the bottles at the preferred temperature. As regards red wines, they will heat up slowly at room temperature when serving.

16 -17°C	Fine Bordeaux wines - Red
15 -16°C	Fine Burgundy wines- Red
14 -16°C	Grand crus (great growth) of dry white wines
11 -12°C	Light,fruity and young red wines
10 -12°C	Provence rosé wines, French wines
10 -12°C	Dry white wines and red country wines
8 - 10°C	White country wines
7 - 8°C	Champagnes
6-°C	Sweet white wines

3- Suggestions relating to the opening of a wine bottle before tasting:

White wines	About 10 minutes before serving
Young red wines	About10 minutes before serving
Thick and mature red wines	About 30 to 60 minutes before serving

4- How long can an open bottle be preserved?

Unfinished bottles of wine must be recorked properly and can be preserved in a cold and dry place during the following periods:

	White	wines Red wines
75 % full bottle	3 to 5 days	4 to 7 days
50 % full bottle	2 to 3 days	3 to 5 days
Less than 50 %	1 day	2 days

6. Maintenance and cleaning

Service life of the product extends and frequently faced problems decrease if cleaned at regular intervals.



WARNING: Unplug the product before cleaning it.

- Never use gasoline, benzene or similar substances for cleaning purposes.
- Never use any sharp and abrasive tools, soap, household cleaners, detergent and wax polish for cleaning.
- Dissolve one teaspoon of baking soda in half litre of water. Soak a cloth with the solution and wrung it thoroughly. Wipe the interior of the refrigerator with this cloth and the dry thoroughly.
- Make sure that no water enters the lamp housing and other electrical items.
- If you will not use the refrigerator for a long period of time, unplug it, remove all food inside, clean it and leave the door ajar.
- Check regularly that the door gaskets are clean. If not, clean them.
- To remove door and body shelves, remove all of its contents.
- Remove the door shelves by pulling them up. After cleaning, slide them from top to bottom to install.
- Never use cleaning agents or water that contain chlorine to clean the outer surfaces and chromium coated parts of the product. Chlorine causes corrosion on such metal surfaces

6.1 Avoiding bad odors

Materials that may cause odor are not used in the production of our refrigerators. However, due to inappropriate food preserving conditions and not cleaning the inner surface of the refrigerator as required can bring forth the problem of odor . Pay attention to following to avoid this problem:

- Keeping the refrigerator clean is important. Food residuals, stains, etc. can cause odor . Therefore, clean the refrigerator with baking soda dissolved in water every 15 days. Never use detergents or soap.
- Keep the food in closed containers. Microorganisms spreading out from uncovered containers can cause unpleasant odors.
- Never keep the food that have expired best before dates and spoiled in the refrigerator.

6.2 Protecting the plastic surfaces

Do not put liquid oils or oil-cooked meals in your refrigerator in unsealed containers as they damage the plastic surfaces of the refrigerator. If oil is spilled or smeared onto the plastic surfaces, clean and rinse the relevant part of the surface at once with warm water.

7. Troubleshooting

Check this list before contacting the service. Doing so will save you time and money. This list includes frequent complaints that are not related to faulty workmanship or materials. Certain features mentioned herein may not apply to your product.

The refrigerator is not working.

- The power plug is not fully settled. >>> Plug it in to settle completely into the socket.
- The fuse connected to the socket powering the product or the main fuse is blown. >>> Check the fuses.

Condensation on the side wall of the cooler compartment (MULTI ZONE, COOL, CONTROL and FLEXI ZONE).

- The door is opened too frequently >>> Take care not to open the product's door too frequently.
- The environment is too humid. >>> Do not install the product in humid environments.
- Foods containing liquids are kept in unsealed holders. >>> Keep the foods containing liquids in sealed holders.
- The product's door is left open. >>> Do not keep the product's door open for long periods.
- The thermostat is set to too low temperature. >>> Set the thermostat to appropriate temperature.

Compressor is not working.

- In case of sudden power failure or pulling the power plug off and putting back on, the gas pressure in the product's cooling system is not balanced, which triggers the compressor thermic safeguard. The product will restart after approximately 6 minutes. If the product does not restart after this period, contact the service.
- Defrosting is active. >>> This is normal for a fully-automatic defrosting product. The defrosting is carried out periodically.
- The product is not plugged in. >>> Make sure the power cord is plugged in.
- The temperature setting is incorrect. >>> Select the appropriate temperature setting.
- The power is out. >>> The product will continue to operate normally once the power is restored.

The refrigerator's operating noise is increasing while in use.

- The product's operating performance may vary depending on the ambient temperature variations. This is normal and not a malfunction.

The refrigerator runs too often or for too long.

- The new product may be larger than the previous one. Larger products will run for longer periods.
- The room temperature may be high. >>> The product will normally run for long periods in higher room temperature.
- The product may have been recently plugged in or a new food item is placed inside. >>> The product will take longer to reach the set temperature when

recently plugged in or a new food item is placed inside. This is normal.
- Large quantities of hot food may have been recently placed into the product. >>> Do not place hot food into the product.
- The doors were opened frequently or kept open for long periods. >>> The warm air moving inside will cause the product to run longer. Do not open the doors too frequently.
- The freezer or cooler door may be ajar. >>> Check that the doors are fully closed.
- The product may be set to temperature too low. >>> Set the temperature to a higher degree and wait for the product to reach the adjusted temperature.
- The cooler or freezer door washer may be dirty, worn out, broken or not properly settled. >>> Clean or replace the washer. Damaged / torn door washer will cause the product to run for longer periods to preserve the current temperature.

The freezer temperature is very low, but the cooler temperature is adequate.
- The freezer compartment temperature is set to a very low degree. >>> Set the freezer compartment temperature to a higher degree and check again.

The cooler temperature is very low, but the freezer temperature is adequate.
- The cooler compartment temperature is set to a very low degree. >>> Set the freezer compartment temperature to a higher degree and check again.

The food items kept in cooler compartment drawers are frozen.
- The cooler compartment temperature is set to a very low degree. >>> Set the freezer compartment temperature to a higher degree and check again.

The temperature in the cooler or the freezer is too high.
- The cooler compartment temperature is set to a very high degree. >>> Temperature setting of the cooler compartment has an effect on the temperature in the freezer compartment. Wait until the temperature of relevant parts reach the sufficient level by changing the temperature of cooler or freezer compartments.
- The doors were opened frequently or kept open for long periods. >>> Do not open the doors too frequently.
- The door may be ajar. >>> Fully close the door.
- The product may have been recently plugged in or a new food item is placed inside. >>> This is normal. The product will take longer to reach the set temperature when recently plugged in or a new food item is placed inside.
- Large quantities of hot food may have been recently placed into the product. >>> Do not place hot food into the product.

Shaking or noise.
- The ground is not level or durable. >>> If the product is shaking when moved slowly, adjust the stands to balance the product. Also make sure the ground is sufficiently durable to bear the product.

- Any items placed on the product may cause noise. >>> Remove any items placed on the product.

The product is making noise of liquid flowing, spraying etc.

- The product's operating principles involve liquid and gas flows. >>> This is normal and not a malfunction.

There is sound of wind blowing coming from the product.

- The product uses a fan for the cooling process. This is normal and not a malfunction.

There is condensation on the product's internal walls.

- Hot or humid weather will increase icing and condensation. This is normal and not a malfunction.
- The doors were opened frequently or kept open for long periods. >>> Do not open the doors too frequently; if open, close the door.
- The door may be ajar. >>> Fully close the door.

There is condensation on the product's exterior or between the doors.

- The ambient weather may be humid, this is quite normal in humid weather. >>> The condensation will dissipate when the humidity is reduced.

The interior smells bad.

- The product is not cleaned regularly. >>> Clean the interior regularly using sponge, warm water and carbonated water.
- Certain holders and packaging materials may cause odour. >>> Use holders and packaging materials without free of odour.
- The foods were placed in unsealed holders. >>> Keep the foods in sealed holders. Micro-organisms may spread out of unsealed food items and cause malodour. Remove any expired or spoilt foods from the product.

The door is not closing.

- Food packages may be blocking the door. >>> Relocate any items blocking the doors.
- The product is not standing in full upright position on the ground. >>> Adjust the stands to balance the product.
- The ground is not level or durable. >>> Make sure the ground is level and sufficiently durable to bear the product.

The vegetable bin is jammed.

- The food items may be in contact with the upper section of the drawer. >>> Reorganize the food items in the drawer.

If The Surface Of The Product Is Hot.

- High temperatures may be observed between the two doors, on the side panels and at the rear grill while the product is operating. This is normal and does not require service maintenance!Be careful when touching these areas.



WARNING:

If the problem persists after following the instructions in this section, contact your vendor or an Authorised Service. Do not try to repair the product.

DISCLAIMER / WARNING

Some (simple) failures can be adequately handled by the end-user without any safety issue or unsafe use arising, provided that they are carried out within the limits and in accordance with the following instructions (see the “Self-Repair” section).

Therefore, unless otherwise authorized in the “Self-Repair” section below, repairs shall be addressed to registered professional repairers in order to avoid safety issues. A registered professional repairer is a professional repairer that has been granted access to the instructions and spare parts list of this product by the manufacturer according to the methods described in legislative acts pursuant to Directive 2009/125/EC.

However, only the service agent (i.e. authorized professional repairers) that you can reach through the phone number given in the user manual/warranty card or through your authorized dealer may provide service under the guarantee terms. Therefore, please be advised that repairs by professional repairers (who are not authorized by Grundig) shall void the guarantee.

Self-Repair

Self-repair can be done by the end-user with regard to the following spare parts: door handles,door hinges, trays, baskets and door gaskets (an updated list is also available in support.grundig.com as of 1st March 2021).

Moreover, to ensure product safety and to prevent risk of serious injury, the mentioned self-repair shall be done following the instructions in the user manual for self-repair or which are available in support.grundig.com. For your safety, unplug the product before attempting any self-repair.

Repair and repair attempts by end-users for parts not included in such list and/or not following the instructions in the user manuals for self-repair or which are available in support.grundig.com, might give raise to safety issues not attributable to Grundig, and will void the warranty of the product.

Therefore, it is highly recommended that end-users refrain from the attempt to carry out repairs falling outside the mentioned list of spare parts, contacting in such cases authorized professional repairers or registered professional repairers. On the contrary, such attempts by end-users may cause safety issues and damage the product and subsequently cause fire, flood, electrocution and serious personal injury to occur.

By way of example, but not limited to, the following repairs must be addressed to authorized professional repairers or registered professional repairers: compressor, cooling circuit, main board,inverter board, display board, etc.

The manufacturer/seller cannot be held liable in any case where end-users do not comply with the above.

The spare part availability of the refrigerator that you purchased is 10 years.
During this period, original spare parts will be available to operate the refrigerator properly
The minimum duration of guarantee of the refrigerator that you purchased is 24 months.

GRUNDIG UK AND IRELAND STANDARD MANUFACTURER GUARANTEE TERMS AND CONDITIONS

Your new Grundig product is guaranteed against faulty materials, defective components or manufacturing defects.

The standard guarantee starts from the date of original purchase of the product, and lasts for a period of twenty four (24) months unless Beko plc (the "Manufacturer") agrees to extend the guarantee for the product in writing.

If you have purchased a Built-In/integrated product, the standard guarantee starts from the date of original purchase of the product, and lasts for a period of thirty six (36) months unless Beko plc (the "Manufacturer") agrees to extend the guarantee for the product in writing.

If you have registered Built-In/integrated product within 90 days of purchase by completing the online registration form, then the standard 36-month guarantee will be extended to 60 months, under the same terms and conditions as detailed below.

If you have any questions about the guarantee on your product (including how long it is valid), please contact your retailer or our contact centre on **0333 207 9920** (UK and Northern Ireland) or **01 691 0203** (Republic of Ireland)

This guarantee does not in any way diminish or affect your statutory rights in connection with the product. This guarantee is in addition to your statutory rights as a consumer. If you have any questions about these rights, please contact the retailer from which you purchased the product. In certain circumstances, it is possible that your statutory rights may offer additional or higher levels of protection than those offered under the terms of this guarantee.

What is covered by this guarantee?

- Repairs to the product required as a result of faulty materials, defective components or manufacturing defects.
- Functional replacement parts to repair a product.
- The costs of a Grundig Approved Engineer to carry out the repair.

What is not covered?

- Transit and delivery damage.
- Cabinet or appearance parts, including but not limited to control knobs, flaps and handles.

- Accessories and/or consumable items including but not limited to ice trays, scrapers, cutlery baskets, filters and light bulbs.
- Repairs necessary as a direct or indirect result of:
  -Accidental damage, misuse or abuse of a product.
  -An attempted repair of a product by anyone other than a Grundig Approved Engineer (the "Engineer").
  -Installation or use of a product where such installation or use fails to meet the requirements contained in this guarantee or the User Instructions Booklet.
- Repairs to a product operated at any time on commercial or non-residential household premises (unless we have previously agreed to the installation environment).

This guarantee is limited to the cost of repairing the product. To the extent permitted by law, the Manufacturer does not accept and will not be held liable for any financial loss incurred in connection with the failure of any product to operate in accordance with the expected standards. Such financial loss includes but is not limited to loss arising from:

- Time taken off work.
- Damaged food, clothing or other items.
- Meals taken at restaurants or from takeaways.
- General compensation for inconvenience.

Important Notes

1. Your product is designed and built for domestic household use only.
2. The guarantee will automatically be void if the product is installed or is used in commercial or non-residential domestic household premises, unless we have previously agreed to the installation environment.
3. The product must be correctly installed, located and operated in accordance with the instructions contained in the User Instructions Booklet provided with your product.
4. Professional installation by a qualified Electrical Domestic Appliance Installer is recommended for all Washing Machines, Dishwashers and Electric Cookers (as incorrect installation may result in you having to pay for the cost of repairing the product).
5. Gas Cookers must be professionally installed by a Gas Safe (or Gas Networks Ireland for Republic of Ireland) registered gas installer.
6. This guarantee is given in respect of products purchased and used within the United Kingdom and the Republic of Ireland.
7. This guarantee is effective from the initial date of purchase of a new product from an authorised retailer and will be void if the product is resold.
8. This guarantee does not apply to graded sales (where the product is purchased as a "second").
9. Possession of a copy of these terms and conditions does not necessarily mean that a product has the benefit of this guarantee. If you have any questions, please call our Call Centre on the number set out above.

10. The Manufacturer reserves the right to terminate the guarantee if its staff or representatives are subjected to physical or verbal abuse in the course of carrying out their duties.
11. Optional extras, where available (i.e. extendable feet) are supplied on a chargeable basis only.

Does Grundig offer replacements?

This is a repair-only guarantee. On occasion, the Manufacturer may at its sole discretion, replace your product with a new product instead of carrying out a repair. Where a replacement is offered, this would normally be an identical model but when this is not possible, a model of similar specification will be provided. The Manufacturer will cover the costs and arrange for the delivery of the new product and for the return of the old product. Any costs related to disconnecting the faulty product and installing the replacement product will not be borne by the Manufacturer unless previously agreed to in writing. The original guarantee will continue to apply to the replacement product; the new product will not come with a new guarantee.

When will the repair take place?

Our Engineers work Monday to Friday 9.00am to 5.00pm. Appointments outside these hours may be possible at the sole discretion of the Manufacturer but cannot be guaranteed. Whilst our Engineers will endeavour to minimize inconvenience and to meet requests for specific timed appointments, this cannot be guaranteed. We will not be liable for delays or if it is unable to carry out a repair because a convenient appointment cannot be arranged.

Will there be any charge for the repairs?

It is your responsibility to provide evidence to the Engineer that your product is covered by this guarantee with a proof of purchase. The Manufacturer reserves the right to charge for the reasonable cost of any service call if:

- You cannot provide evidence that your product is covered by this guarantee.
- Where a service call has been made and the engineer finds that there is no fault with your product.
- That your product has not been installed or operated in accordance with the User Instructions Booklet.
- That the fault was caused by something other than faulty materials, defective components or manufacturing defects.
- For missed appointments.

Payment of these costs are due immediately upon the Engineer providing you with an invoice. The Manufacturer reserves the right to terminate the guarantee if you fail to pay the costs for the service call in a timely manner.

If you are a resident of the United Kingdom, this guarantee will be governed by English law and subject to the English Courts, save where you live in another part of the United Kingdom, in which case the law and courts of that location will apply.
If you are resident in the Republic of Ireland, this guarantee will be governed by Irish law and the Irish courts will have jurisdiction.

This guarantee is provided by Beko plc. Beko House, 1 Greenhill Crescent, Watford, Hertfordshire. WD18 8QU.

Beko plc is registered in England and Wales with company registration number 02415578.

HOW TO OBTAIN SERVICE FOR YOUR APPLIANCE

Please keep your purchase receipt or other proof of purchase details in a safe place; you will need to have this documentation available should the product require attention under guarantee.

Please take a few moments to complete the details below, as you will need this information when you call us, or to use our online services. When you call us you may be required to input your serial number into your telephone keypad. For help please visit grundig.co.uk/support/model-finder

- The product model number is printed on the Operating Instruction Booklet / User guide
- The product model and serial number is printed on the Rating Label affixed to the appliance.
- The Retailer (Purchased from) and Date of purchase will be printed on your purchase receipt or other proof of purchase paperwork

Recording of these details alone will not count as proof of purchase.
A valid proof of purchase is required for requesting service under guarantee.

Model number	Serial number	Purchased from	Date of purchase

For service under guarantee or for product advice please call our Contact centre

Before requesting service please check the troubleshooting guide in the Operating Instructions booklet, as a charge may be levied where no fault is found, and even though your product may still be under guarantee.

After arranging service the area around the product must be easily accessible to the Engineer, without the need for cabinets or furniture to be removed or moved.

It is your responsibility to ensure our Engineers have a clean and safe environment to carry out any repairs.

Please have your Model number and Serial number available when you call us, as you may be required to input your serial number into your telephone keypad during your call.

UK Mainland & Northern Ireland:

0333 207 9920

Landline or mobile calls to 0333 numbers cost no more than calls to geographic numbers 01 or 02, and are charged at the basic rate. Calls from landlines and mobiles are included in free call packages but please check with your telephone service provider for exact call charges.

Republic of Ireland:

01 691 0203

Service once the manufacturers guarantee has expired

If you have purchased an extended guarantee please refer to the instructions contained within the extended guarantee agreement document, otherwise please call us using the appropriate number above, where service can be obtained at a charge.

Should you experience any difficulty in obtaining service please call us on **0333 207 9920** or **01 691 0203**

Contact us though our website
Send us a secure message through our online contact us form. Please visit our website, click Contact Us and choose a product support topic from the list of options. Complete the required details and click send message.

Product registrations

For UK and Republic of Ireland product registrations please visit grundig.co.uk/register.

Notes

Notes