

Operating- and servicemanual
Gram Standard Plus

This is a service manual!
Only to be used by skilled technician!
To be used in combination with the user manual!

Table of contents

Distance to wall and ceiling 3
General description 4
Electrical connection 5
General use 6
Cleaning 8
Operating the product 9
Start-up 11
Defrost 11
Keyboard Lock 11
Changing the temperature 12
Errors and Alarms 12
Display of the evaporator sensor reading 13
HACCP Alarms 13
Setting of HACCP alarm values 13
Display of HACCP alarms 14
Deletion of HACCP alarms 14
Cleaning of condenser filter 15
Default factory settings 15
Access to service parameters 16
Parameter overview 17
COMPRESSOR PROTECTION SYSTEM 18
DEFROSTING 19
ALARM PARAMETERS 22
EVAPORATOR FAN PARAMETERS 23
DIGITAL INPUTS " Door Switch, (Multifunction input, not used) 23
DIGITAL OUTPUTS 24
SERIAL NETWORK (MODBUS) 25
Changing door hinge side : 27
Wiring diagram Standard Plus K/M 32
Wiring diagram Standard Plus F 33
Piping diagram 34

Distance to wall and ceiling

The product should be placed as close as possible up against the back wall. For products with a heating element in the tray on the cabinet backside, however max. 75 mm from the wall. (K & M models)

There must always be 300 mm of free space above the product, to ensure that the heat from the condenser can be led away.

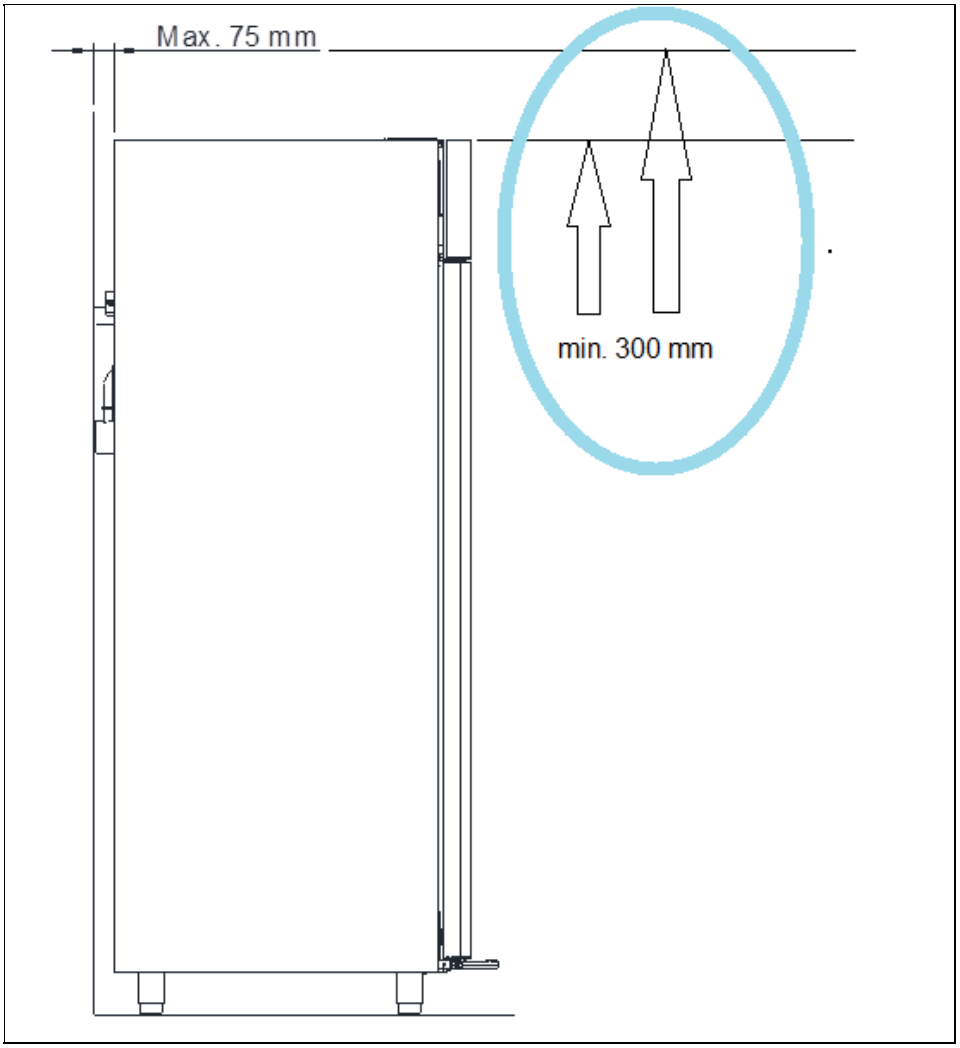

General description

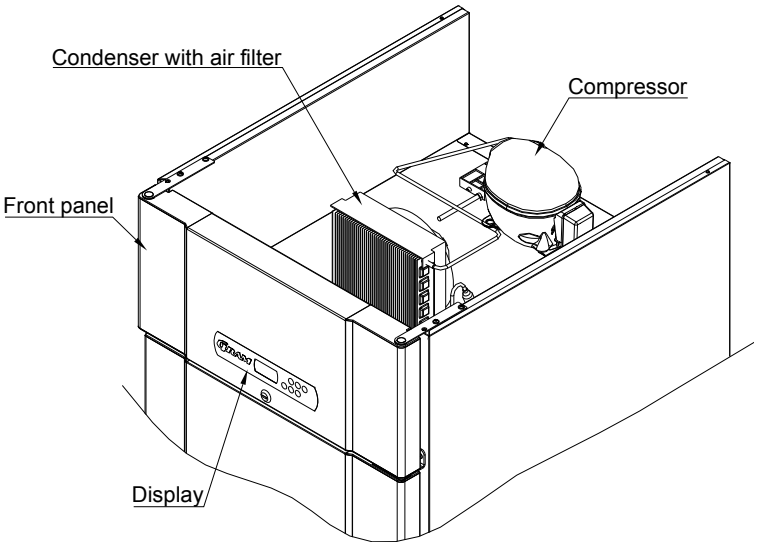

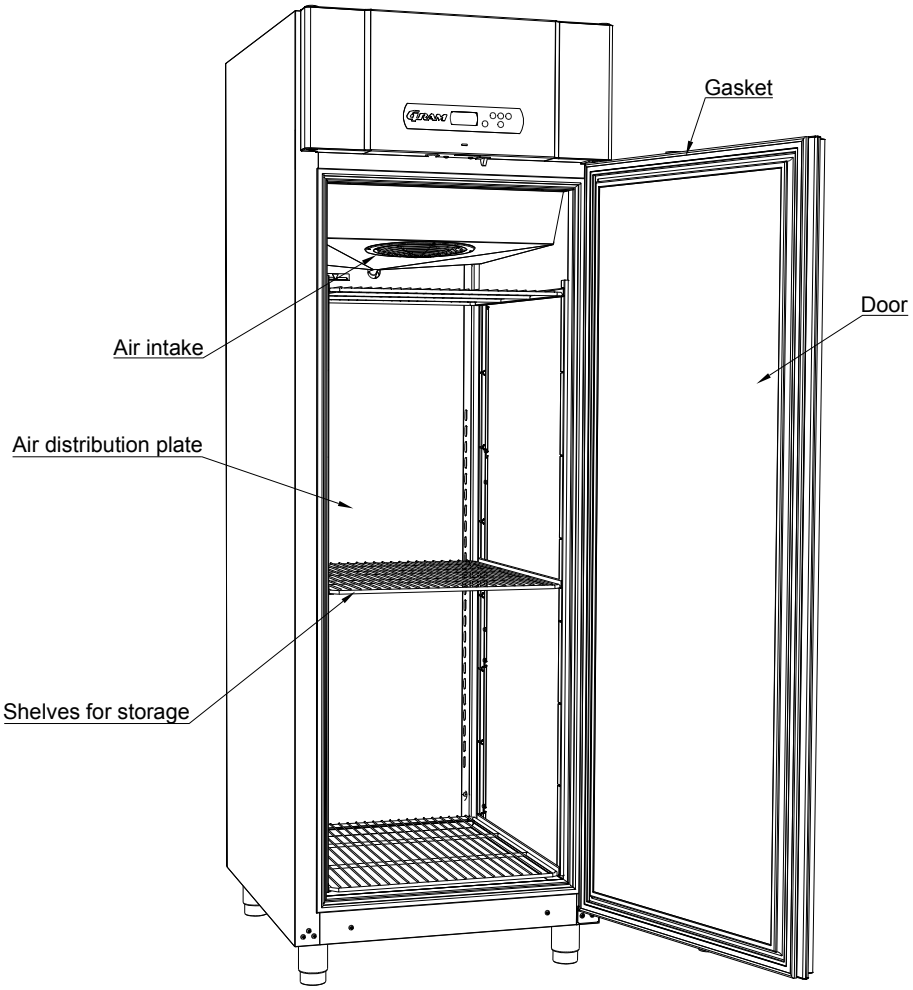

Electrical connection

Read the text below thoroughly before electrical connection.

The product is intended for connection to alternating current. The connection voltage (V) and frequency (Hz) are shown on the name plate in the cabinet (see Fig. 8). Only the supplied cord is to be used.

Never use an extension cord for this appliance!
If a wall socket is placed in a longer distance than the length of the supplied power cord, contact an electrician to establish a wall socket within the range of the supplied power cord.

If the product is defective, it must be examined by a service electrician advised by Gram Commercial during the guarantee period, if it is a product with built-in compressor.
If it is a product connected to an external compressor unit, it must be examined by the company who has connected the product to the unit.
Outside the guarantee period, it is advisable to use the service advised by Gram Commercial, if possible. If this is not the case, assistance is required from a refrigeration company with knowledge of Gram's products.

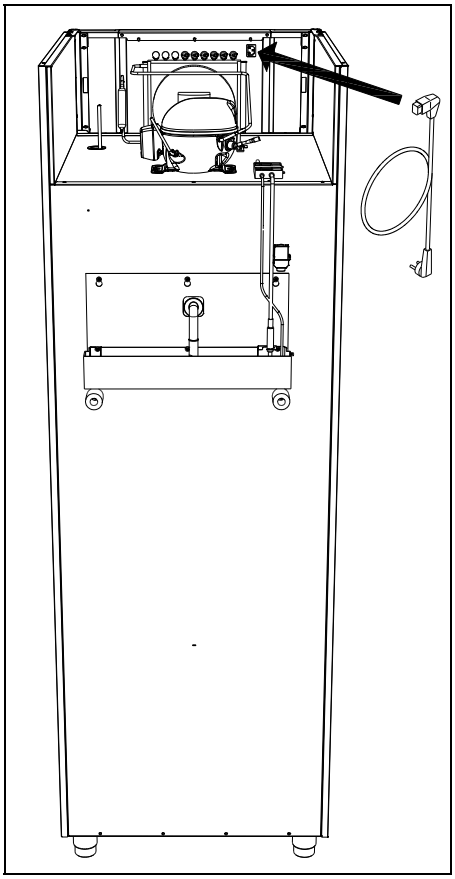

Fig. 5

Always disconnect the power if interruptions in power supply occur, and when electrical parts are removed/put on, and before cleaning and maintenance of the product.

Repairing of electrical/technical parts may only be performed by a service electrician from Gram Commercial or an authorised refrigeration company with knowledge of Gram's products.

Do not re-connect the product to the main supply or use the product before all coverings are installed, so that live or rotating machine parts can not be touched.

The product is not to be used outdoor.

All earthing requirements stipulated by the local electricity authorities must be observed. The plug and wall socket should then give correct earthing. If necessary, contact an electrician.

⚠ Make sure the product is disconnected at the wall socket or at the cabinet inlet as shown above (Fig. 5), before service is performed on electrical parts. It is not sufficient to switch off the product by the START/STOP key as there will still be voltage to some electrical parts of the product.

General use

⚠ Do not damage the refrigeration system parts.

⚠ During normal operation, some parts of the refrigeration system in the compressor compartment might reach high temperatures, and could therefore cause burns if touching these components.

☝ Do not use electrical devices inside the product.

☝ To ensure correct and efficient air flow in the cabinet, the upper and lower areas must be kept free of items as shown on the next page. (see Fig. 6)

☝ All items to be stored, that are not wrapped or packed, must be covered in order to avoid unnecessary corrosion of the inner parts of the cabinet.

☝ If any controller parameters are changed from default, this could cause that the product is not functioning normally, and harmful temperatures could damage items that are kept inside the product.

☝ If the product is turned off, wait minimum 3 minutes before turning it on again. This is to protect the compressor from damage

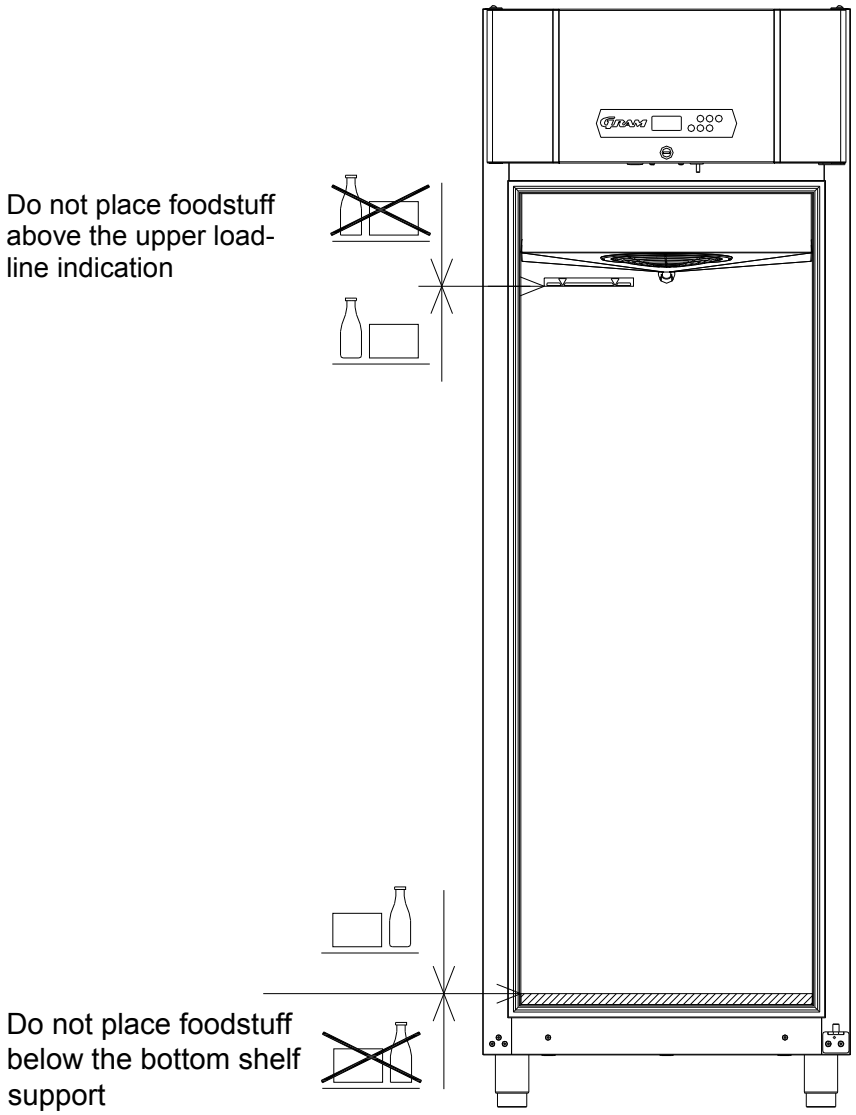
Do not place foodstuff above the upper load-line indication
Do not place foodstuff below the bottom shelf support

Fig. 6

Cleaning

Insufficient cleaning will cause that the product will not work at optimum perfomance, or eventually it will be defective.



Before cleaning, the product should always be disconnected.



Do not flush the product with water, do not use water jet or steam hose as this may cause short-circuits in the electrical system.



Cleansing agents containing chlorine or compounds of chlorine as well as other corrosive means, **are not to be used**, as they might cause corrosion to the stainless panels of the cabinet and the evaporator.



The compressor compartment and in particular the condenser must be kept free from dust and dirt. This is best done with a vacuum cleaner.
The air filters on the condenser must be removed and cleaned. This can be done in a dishwasher at max. 50°C.



For the external maintenance – use stainless steel polish.



The product should be cleaned internally with a mild soap solution at suitable intervals and checked thoroughly before it is put into operation again.

Operating the product



Display	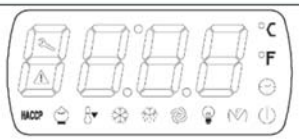	The display contains the elements that are shown to the left of this text. Not all the symbols shown are used in this product. The symbols that are used are described below. The temperature is shown in the 4 alphanumeric positions. The individual symbols show what is in operation.
Symbols	HACCP	If this symbol is lit, not all HACCP alarms have been displayed. If this symbol flashes, the controls have stored at least one new HACCP alarm. If this symbol is not lit, then all HACCP related alarms have been shown or the alarm log has been deleted.
		If this symbol is lit, then the compressor is in operation. If this symbol flashes, the set point of the controls is about to be changed or the compressor is being prevented from starting due to various safety parameters in the controls.
		If this symbol is lit, the controls are performing a defrosting process. If this symbol flashes, the drip time after defrosting is under way or defrosting could not be commenced due to the compressor's operation preventing this defrosting.
		If this symbol is lit, then the evaporator fan is in operation. If this symbol flashes, it means that the evaporator fan has been deactivated/limited in starting by various parameters in the controls.
		When this symbol is lit, the frame and drainage heating elements respectively have been switched on (only applies to freezers).
		When this symbol is lit, the cabinet is in energy-saving mode.
		When this symbol is lit, it is time to clean the cabinet's condenser

		When this symbol is lit, there is a current alarm or a sensor fault that needs to be addressed.
		This symbol indicates that the temperature in the display is measured in °C
		When this symbol is lit, the cabinet is in standby mode.
Operating buttons		On/off button. Used to switch the cabinet on or off and to exit a menu.
		Press the P button to set the desired temperature in the cabinet /Set point. This button is also used as a ”select” button.
		+/- buttons. Up/down when making settings.
		The alarm clock is used in connection with temperature alarms
		The defrosting button is used to initiate manual defrosting

Start-up

Connect the product to the electrical outlet. If the product starts in Standby, do the following:

- Press the button for approx. 2 sec to switch the product on.

Upon start-up, the display will show the current temperature in the cabinet and relevant control lights will be lit.

Defrost

The cabinet will start up without a defrost cycle (default setting). This default setting is made due to the fact that the controller does have a manual defrost button. If a customer does however desire the cabinet to perform a defrost cycle at start up, this can be adjusted by doing the following. Parameter "d4" is changed to "1", then the cabinet will start with a defrost cycle. The duration of the defrost will maximum equal the time "d3" or end if the evaporator sensor reaches Temperature "d2". (See the parameter list)

Keyboard Lock

If the display is locked, attempts to switch the cabinet off or to enter settings will result in the display showing Loc. In this state, no settings can be made on the controls.

The keyboard for the controls can be unlocked by simultaneously pressing - and for approx. 1 second. The display will now show UnL, and the display is unlocked.

The keyboard can be locked in the same manner. After being locked, the display will show Loc, and the display is locked.

Changing the temperature

To set the desired set point, do the following:

- Briefly press the button (P). Once this has been done, the current set point of the product is shown in the display. Furthermore, the symbol ❄ will flash as an indication that the set point is about to be changed. The set point can now be changed using (+) or (-).
- Each time (+) or (-) is pressed, the temperature is changed by 0.1 degrees up or down respectively. If (+) or (-) is pressed continuously, then the set point is changed continuously.
- Once the desired set point has been set, the new value is shown in the display.
- Pressing the button (P) saves the new set point, and the controller does return to normal operation.

If there is no confirmation by pressing the button (P), the controller will return to normal operation after 15 seconds. Those changes that might have been performed with respect to the set point will then be saved such that the value set will become the new cabinet set point.

Errors and Alarms

Display	Description
⚠ **AL**	Low temperature alarm. This alarm is saved in the alarm log.
⚠ AH	High temperature alarm. This alarm is saved in the alarm log.
⚠ ⌊d	Door alarm, if the door remains open or is not properly closed. This alarm is cancelled when the door is closed properly again. The alarm will however be kept in haccp log.
⚠ **Pr1**	Room sensor error. The error display will persist until the fault is remedied. Service is required for the product.
⚠ **Pr2**	Evaporator sensor error. The error display will persist until the fault is remedied. Service is required for the product.

Display of the evaporator sensor reading

In order to check the evaporator temperature / the function of the evaporator sensor, it is possible to read out the evaporator temperature from the controller display. This is done by holding ⊖ for approx. 2 Seconds. The dispaly will then show **"rCH"**. Press ⊕ until **"PB2"** is shown in the display. In order to display the current reading of probe 2 „PB2", which is the evaporator sensor, it is now necessary to press P. Now the evaporator temperature is displayed. In order to end the read out press ⏻. If nothing further is touched for 60 seconds, the display will return to standard operation showing the cabinet temperature.

HACCP Alarms

The controls can store up to three HACCP alarms. The information saved for these alarms is:

- The critical value(s)
- Duration of the alarm

The controls can display the following alarms:

Display	Explanation
AL	Low temperature alarm. The read-out provided by the controls for the alarm shows the lowest temperature that has occurred in the cabinet and how long the cabinet temperature has been under the set alarm value (A1).
AH	High temperature alarm. The read-out provided by the controls for the alarm shows the highest temperature that has occurred in the cabinet and how long the cabinet temperature has been above the set alarm value (A4).
Ld	Door alarm. The read-out provided by the controls for the alarm shows the highest temperature that has occurred in the cabinet during this type of alarm and how long the door has been open.

Setting of HACCP alarm values

This is done by pressing ⊕ and ⊖ simultaneously until A1 is shown in the display. Then press ⊕ or ⊖ to switch between the individual parameters (A1, A4 and A7). The PA parameter, which appears when browsing as described above, is treated in the chapter on service parameters.

Display	Explanation
A1	Low temperature alarm limit. The default setting is -35°C
A4	High temperature alarm limit. The default setting is +25°C
A7	Time delay for A1 and A4. The default is 60 minutes.

Display of HACCP alarms

If there have been or still are one or more alarms for the cabinet, this will be indicated by the controls.

When “HACCP” is continuously lit in the control display, not all HACCP alarms have been read out.
If “HACCP” flashes, the controls have stored at least one new HACCP alarm.
If “HACCP” is not lit, then all HACCP related alarms have been shown or the alarm log has been deleted.

If one or more alarms are active for the cabinet, then the symbol ⚠ will be lit. Active alarms cannot be deleted.

If “HACCP” is either continuously lit or flashing in the display, it is possible to read out the alarm(s) contained in the log. This is done by pressing the button 🔔. This action causes LS to appear on the control display. Pressing (P) will then cause information on the first possible alarm type to be displayed. Pressing (+) or (-) will cause the controls to switch between the different alarms if there are more than one type. When the alarm for which data is desired to be read out is reached, then do the following.
example:
The controls show AH. Press (P).
The controls will now show the data that relates to the AH alarm. Each individual step is shown for approx. 1 second. The sequence is as follows:

Anzeige	Erläuterung
15.4°C	The critical highest temperature under the AH alarm in °C
dur	Duration of the alarm
H01	Number of hours the temperature alarm has lasted (1 hour)
n20	Number of minutes the temperature alarm has lasted (**n** is used because the display cannot write "m" for minutes)
AH	Alarm type (AH for high temperature alarm)

To leave this part of the display and return to the LS display, press 🔔 once. To exit the alarm log, press once on ⏻ or twice on 🔔. To delete the alarm log instead, do as described in the following.

Deletion of HACCP alarms

When all relevant alarms have been checked and none of them are active any longer, then the log can be deleted in the manner described below.

Press the button 🔔 once, after which the display shows LS. By pressing once more on 🔔 the display will show rLS, which is the reset of the alarm log. When this appears in the

display, then press (P). The display now shows 0. Press the button (+) until the display shows 149. Pressing the button (+) continuously causes the numerical value to change more quickly. If you run past 149, the button (-) can be used to correct the value. When the display shows 149, confirm the deletion by pressing (P). The controls confirm the deletion by showing " ---- " which will flash for 4 seconds.

Cleaning of condenser filter

Reminder about cleaning the condenser's air filter:

To ensure the proper operation of the cabinet, it will be periodically indicated that the filter in front of the condenser has to be cleaned. This is indicated by the warning light being lit.

Resetting of condenser filter alarm:

After the filter has been cleaned, the controls must be reset to remove the filter alarm. Resetting can only be done by a specific key combination.

- Press the button (-) until the control display shows a combination of letters.
- Using the button (+) or (-), press if necessary until the display shows rCH.
- When the display shows rCH, then press (P).
- Then press the button (+) or (-) until the display shows 149.
- When the display shows 149, press (P).
- This causes the display to show **----** for approx. 4 seconds, which confirms that the counter has been reset.

Now the warning light is shut off and the controls return to normal operation according to parameter "C10".

Default factory settings

The controller can be reset to default factory settings. Please be aware that default factory settings of the controller can differ from the settings implemented when the cabinet was delivered. Therefore some parameters might have to be modified after resetting to controller factory setting.

Press buttom (+) and (−) at the same time for approximately 4 seconds untill the Display shows **"A 1"**. Then press (+) or (−) untill the display shows **"PA"**. Press buttom (P), and the display will show **„0"**. Change this value by using (+) or (−) untill the value **" 149"** is shown and then press (P) and the display will again show **"PA".**

Then press ⊕ and ⊖ at the same time and keep them pressed untill the display shows **"dEF".**

Press buttom Ⓟ, and the display will show **„0"**. Change this value by using ⊕ or ⊖ untill the value **" 1"** is shown and then press Ⓟ.

After this the display shows **"dEF"** 4 times and then the default controller settings are restored.

Turn off the power supply to the cabinet and then turn it back on to implement the reset.

The cabinet will start under normal running condition.

Access to service parameters

Press buttons ⊕ and ⊖ at the same time for approximately 4 seconds untill the Display shows **"A 1"**. Then press ⊕ or ⊖ untill the display shows **"PA"**. Press buttom Ⓟ, and the display will show **„0"**. Change this value by using ⊕ or ⊖ untill the value **"- 19"** is shown and then press Ⓟ and the display will again show **"PA".**

Then press ⊕ and ⊖ at the same time and keep them pressed untill the display shows the first service parameter **"SP".**

With the buttons ⊕ and ⊖ it is now possible to select the diffrent service parameters.

Press the button Ⓟ to access the parameter and then use buttons ⊕ and ⊖ to change the value of the parameter. By pressing Ⓟ the entered value will be saved.

To leave the service parameters press ⏻ or keep ⊕ and ⊖ pressed for approximately 4 seconds. If no buttons are pressed for 60 seconds the controller automatically leves the service parameter settings.

Turn off the power supply to the cabinet and then turn it back on to implenet the reset.

The cabinet will start under normal running condition.

Parameter overview

				Freezer	Refrigerator extended	Refrigerator	Cabinet type
				-22 /-10	-5/+12	+2/+12	Temperature area
				45-358-0133	45-358-0134	45-358-0132	GRAM sparepart item number
Parameter	Maximum	Minimum	Value	**Factory setting**			
SP	r1	r2	°C/°F	-18	5	5	Temperature setpoint
CA1	-25.0	25.0	°C/°F	0	0	0	Offset room sensor
CA2	-25.0	25.0	°C/°F	0	0	0	Offset evaporator sensor
CA3	-25.0	25.0	°C/°F	Not applicable			Offset condensor sensor
P1	0	1	- - - -	0	0	0	Celsius grade decimal point; 0=no; 1=yes
P2	0	1	- - - -	0	0	0	Temperature unit of measurement; 0=°C; 1=°F
P3	0	2	- - - -	1	1	1	Evaporator sensor function; 0= sensor absent; 1=defrosting probe and probe for evaporator fan on/off; 2=probe for evaporator fan on/off
P4	0	1	- - - -	0	#	#	Enable condenser sensor 1=yes 0=no
P5			°C/°F	3	3	3	Digital Filter value (if P5 is set to a value (0= filter OFF) , if measured temperature is inside the interval SETPOINT-P5 and SETPOINT + P5, value shown on the display is SETPOINT. If temperature measured is outside previous interval, value shown on the display will be real temperature.
P6	0	1	- - - -	1	1	1	Hysteresis type; 0=asymmetric; 1=symmetric
P8	0	250	ds	100	100	100	Display update time of temperature sensor
r0	0	15	°C/°F	2	2	2	Working setpoint differential (Hysterese)
r1	-99.0	r2	°C/°F	-22	-5	2	Minimum working temperature setpoint
r2	r1	99.0	°C/°F	-10	12	12	Maximum working temperature setpoint
r3	0	1	- - - -	0	0	0	Blocking setpoint calibration for user; 0=no; 1=yes
r4	0	99		0	#	#	Value of set Increase after energy saving cycle activation
r5	0	99	°C/°F	0	0	0	Decrease in temperature during Overcooling function; see also r6
r6	0	240	min	0	0	0	Duration of Overcooling function
r7	0	99	°C/°F	#	#	#	minimum difference “cell temperature - working setpoint” (when the instrument switches on) such as to provoke the exclusion of the consequent value of the evaporator temperature among the ones used for the calculation of the relative average (for the defrost activation; only if d8 = 3); also look at d17

Not relevant or not availble

COMPRESSOR PROTECTION SYSTEM

				Freezer	Refrige-rator extended	Refrige-rator	Cabinet type
				-22 /-10	-5/+12	+2/+12	Temperature area
Para-meter	Maxi-mum	Mini-mum	Value	**Factory setting**			
C0	0	240	min	5	5	5	Delay in switching on compressor after turning on cabinet
C1	0	240	min	5	5	5	Minimum time between two consecutive compressor start-ups; also delay in compressor start-up after conclusion of cell probe error ; overuled by C2+C3;
C2	0	240	min	5	5	5	Minimum duration of compressor switch off time
C3	0	240	sec	240	240	240	Minimum duration of compressor switch on time
C4	0	240	min	10	10	10	Duration of compressor switch off during room sensor error (code “Pr1”); see also C5
C5	0	240	min	30	10	10	Duration of compressor switch on during room sensor error (code “Pr1”); see also C4
C6	0.0	199.0	°C/°F	#	#	#	Condenser temperature is higher than that at which the condenser overheating alarm is activated (code “COH”)
C7	0.0	199.0	°C/°F	#	#	#	condenser temperature is higher than the limit at which the compressor blocked alarm is activated (code “CSd”)
C8	0	15	min	#	#	#	Delay for compressor alarm (code “CSd”)
C10	0	9.999	hr	2160	1440	1440	number of compressor operating hours is higher than the limit at which the need for maintenance is signaled (Interval for condenser/filter cleaning). 0 = function absent

Not relevant or not availble

				Freezer	Refrige-rator extended	Refrige-rator	Cabinet type
				-22 /-10	-5/+12	+2/+12	Temperature area
Para-meter	Maxi-mum	Mini-mum	Value	**Factory setting**			
d0	0	99	hr	6	6	6	defrosting interval (only if d8 = 0, 1 or 2) 0= never activated
d1	0	2	- - - -	0	0	2	Defrost type 0 = Electric 1 = Hotgas 2 = Compressor stop type of defrosting 0= ELECTRIC - during defrosting the compressor will remain off and the defrosting output will be activated; evaporator fan activity will depend on parameter F2; 1=BY HOT GAS - during defrosting the compressor will be switched on and the defrosting output will be activated; evaporator fan activity will depend on parameter F2; 2=VIA STOPPING OF COMPRESSOR - during defrosting the compressor will remain switched off and the defrosting output will remain disactivated; evaporator fan activity will depend on parameter F2
d2	-99	99	°C/°F	12	7	4	evaporator temperature at end of defrosting (only if P3 = 1); see also d3 valid if P3=1
d3	0	99	min	30	30	30	if P3 = 0 or 2, defrosting duration; if P3 = 1, maximum defrosting duration; see also d2; 0= defrost will be never activated
d4	0	1	- - - -	0	0	0	defrosting when instrument is switched on (only if d8 = 0, 1, 2 or 3) 1=yes 0=no
d5	0	99	min	30	30	30	If d4 = 1, delay in activation of defrosting after cabinet is turned on If d4=0 minimum time between turning on cabinet and defrost activation

Not relevant or not availble

				Freezer	Refrige-rator extended	Refrige-rator	Cabinet type
				-22 /-10	-5/+12	+2/+12	Temperature area
Para-meter	Maxi-mum	Mini-mum	Value	**Factory setting**			
d6	0	1	- - - -	1	1	1	Temperature displayed during defrosting 0= Room temperature 1= N/A
d7	0	15	min	4	4	0	Dripping duration
d8	0	4	- - - -	0	0	0	Defrosting activation criterias 0 = Interval cabinet runtime - defrosting will be activated once the cabinet has been running for a certain amount of time, designated as d0 1 = Interval compressor runtime - defrosting will be activated once the compressor has been switched on for time d0 2 = Interval evaporator temperature - defrosting will be activated once the evaporator temperature has been below temperature d9 for time d0 3 = Temperature - defrosting will be activated when one of the following conditions is present : - condition 1: “room temperature - evaporator temperature” difference has been higher than temperature d10 for time d12; - condition 2: evaporator temperature has been below temperature d9 for time d14
d9	-99	99	°C/°F	0	0	0	evaporator temperature is higher than that at which the defrost interval counter is suspended (only if d8 = 2 or if d8 = 3 and for condition 2)
d11	0	1	- - - -	1	1	1	Defrosting alarm switches off once maximum time limit has been reached (code “dFd”; only if P3 = 1 and in absence of an evaporator probe (code “Pr2”) 1 = yes
d15	0	99	min	0	0	0	minimum time that the compressor must be switched on before defrosting can be activated (only if d1 = 1) This is valid only if you have hot gas defrost
d16	0	99	min	0	0	0	Predripping duration (during predripping the compressor will remain switched off, the defrosting output will be activated and the evaporator fan will remain switched off)
d17	1	10		#	#	#	number of evaporator temperature values used for the calculation of the relative average (for the defrost activation; only if d8 = 3); also look at r7, i11 and i12
d18	0	3.000	min	#	#	#	Defrosting interval (only if d8 = 3 and for condition 1) 0 = defrosting for condition 1 will never be activated
d19	0	40	°C/°F	#	#	#	evaporator temperature above which the defrost is activated (relative to the evaporator temperatures average, or “evaporator temperatures

							average - d19") (only if d8 = 3 and for condition 2); also look at d17
d20	0	500	min	0	0	0	minimum consecutive time the compressor must be switched on such as to provoke the defrost activation 0 = the defrost will never be activated because the compressor has been switched
d21	0	500	min	0	0	0	minimum consecutive time the compressor must be switched on after the insturment switches on (on condition that the difference "cell temperature - working setpoint" is higher temperature r7) and after function Overcooling is activated such as to provoke the defrost activation 0 = the defrost will never be activated because the compressor has been switched on
d22	0	10	°C/°F	#	#	#	evaporator temperature above which the defrosting interval is suspended (relative to the evaporator temperatures average, or "evaporator temperatures average + d22") (only if d8 = 3 and for condition 1); also look at d17
d23	0	10	°C/°F	#	#	#	evaporator temperatures average increase during function Energy Saving (for defrost activation; only if d8 = 3); also look at d17

GRAM

ALARM PARAMETERS

				Freezer	Refrige-rator extended	Refrige-rator	Cabinet type
				-22 /-10	-5/+12	+2/+12	Temperature area
Para-meter	Maxi-mum	Mini-mum	Value	**Factory setting**			
A0	0	1	- - - -	0	0	0	Sensor for low temperature alarm (code “AL”) 0 = Room temperature 1 = Evaporator temperature
A1	-99	99	°C/°F	-35	-35	-35	temperature below that at which the minimum temperature alarm is activated (code “AL”); see also A0, A2 and A11
A2	0	2	- - - -	2	2	2	Settings minimum temperature alarm (code “AL”) 0 = alarm deactivated 1 = relative to working setpoint (that is “working setpoint - A1”; consider A1 without sign) 2 = absolute (A1)
A4	-99	99	°C/°F	25	25	25	temperature higher than that at which the maximum temperature alarm is activated (code “AH”); see also A5 and A11
A5	0	2	- - - -	2	2	2	Settings maximum temperature alarm (code “AH”) 0 = alarm deactivated 1 = relative to working setpoint (that is “working setpoint + A4”; consider A1 without sign)) 2 = absolute (A4)
A6	0	240	min	120	120	120	Delay in maximum temperature alarm (code “AH”) after the cabinet is turned on
A7	0	240	min	60	60	60	Temperature alarm delay (code “AL” and code “AH”)
A8	0	240	min	15	15	15	Delay in maximum temperature alarm (code “AH”) after evaporator fan has been stopped
A9	0	240	min	15	15	15	Delay in maximum temperature alarm (code “AH”) after deactivation of door switch
A11	0.1	15	°C/°F	2	2	2	Differential of parameters AL (A1) and AH (A4)

Not relevant or not availble

GRAM

EVAPORATOR FAN PARAMETERS

				Freezer	Refrige-rator extended	Refrige-rator	Cabinet type
				-22 /-10	-5/+12	+2/+12	Temperature area
Para-meter	Maxi-mum	Mini-mum	Value	**Factory setting**			
F0	0	5	- - - -	1	1	1	Evaporator fan activity during normal operation 0 = Switched off 1 = Switched on; F13, F14 and ∟10 2 = Parallel with compressor; F9, F13, F14 and ∟10 3 = Dependent on F1 4 = Switched off if compressor is switched off, dependent on F1 if the compressor is switched on 5 = Dependent on F6
F1	-99	99	°C/°F	-1	-1	-1	evaporator temperature above the limit at which the evaporator fan is switched off (only if F0 = 3 or 4); see also F8
F2	0	2	- - - -	0	0	1	evaporator fan activity during defrosting and dripping 0 = switched off 1 = switched on (recomended; d7=0) 2 = dependent on F0
F3	0	15	min	5	5	5	Maximum duration of evaporator fan deactivation after dripping; see also F7
F4	0	240	sec	60	60	60	time duration that evaporator fan is switched off during operation for a low percentage of relative humidity when the compressor is switched off; see also F5 (only if F0 = 5)
F5	0	240	sec	10	10	10	time duration that evaporator fan is switched on during operation for a low percentage of relative humidity when the compressor is switched off; see also F4 (only if F0 = 5)
F6	0	1		1	1	1	operation for low or high percentage of relative humidity (only if F0 = 5) 0 = low relative humidity - evaporator fan will operate in parallel with the compressor; see also F4 and F5 1 = high relative humidity - evaporator fan will always be switched on
F7	-99	99	°C/°F	5	5	5	evaporator temperature to activate fans during the fan stop phase (relative to working setpoint, that is “working setpoint + F7”); see also F3
F8	1	15	°C/°F	2	2	2	parameter F1 differential
F9	0	240	sec	60	60	60	delay in switching off the evaporator fan following the switching off the compressor
F13	0	240	min	5	5	5	time the evaporator fan remains turned off during function Energy Saving; see also F14 and ∟10 (only if F0 = 1 or 2)
F14	0	240	min	1	1	1	time the evaporator fan remains turned on during function Energy Saving; see also F13 and ∟10 (only if F0 = 1 or 2)

Not relevant or not availble

DIGITAL INPUTS " Door Switch, (Multifunction input, not used)

				Freezer	Refrige-rator extended	Refrige-rator	Cabinet type
				-22 /-10	-5/+12	+2/+12	Temperature area
Para-meter	Maxi-mum	Mini-mum	Value	**Factory setting**			
∟0	0	5	- - - -	2	2	2	Effect caused by door switch activation; see also ∟4 0 = deactivated 1 = compressor and evaporator fan will be switched off (for time ∟3 or until input is disactivated 2 = evaporator fan will be switched off (for time ∟3 or until input is disactivated)
∟1	0	1	- - - -	1	1	1	Type of door switch input 0 = normally open (active input with closed contact) 1 = normally closed (active input with open contact)
∟2	-1	120	min	5	5	5	Delay of door alarm (code "∟d") -1= the alarm will not be signaled
∟3	-1	120	min	-1	-1	-1	maximum duration of the effect caused by activation of the door switch on the compressor and the evaporator fan -1= the effect will last until the input is disactivated
∟4	0	1	- - - -	1	1	1	storage of door alarm (code "∟d") 1 = yes
∟5	0	6	- - - -	0	#	#	Configuration multifunction input: Not availeble / not used
∟6	0	1	- - - -	0	#	#	
∟7	0	120	min	0	#	#	
∟8	0	15	- - - -	0	#	#	
∟9	1	999	min	#	#	#	
∟10	0	999	min	11	11	11	Time without activations of door switch needed to automatically activate energy saving function (condition; cabinet temperature has reached working setpoint) (effect on the evaporator fan only if F0 = 1 or 2) 0 = function will never be automatically activated
∟11	0	240	sec	#	#	#	minimum time door switch must be activated (only if d8 = 3); Not used
∟12	0	240	sec	#	#	#	minimum time door switch must be activated (only if d8 = 3); Not used
∟13	0	240	- - - -	0	0	0	number of door switch input activations to provoke the defrost activation 0 = the defrost will never be activated because of the door switch input activation
∟14	0	240	min	0	0	0	Minimum duration of the door switch input activation to provoke the defrost activation 0 = the defrost will never be activated because of the door switch input activation

Not relevant or not availble

DIGITAL OUTPUTS

				Freezer	Refrige-rator extended	Refrige-rator	Cabinet type
				-22 /-10	-5/+12	+2/+12	Temperature area
Para-meter	Maxi-mum	Mini-mum	Value	**Factory setting**			
u1	0	6	- - - -	4	#	#	operation controlled by the fourth relay output 0 = CELL LIGHT - in this case the AUXILIARY key and parameters i0 and u2 will be activated 1 = DEMISTER RESISTORS - in this case the AUXILIARY key and parameter u6 will be activated 2 = AUXILIARY OUTPUT - in this case the AUXILIARY key and parameters i5 and u2 will be activated 3 = ALARM OUTPUTS - in this case parameter u4 will be activated 4 = DOOR RESISTORS - in this case parameter u5 will be activated 5 = EVAPORATOR VALVE - in this case parameters u7 and u8 will be activated 6 = CONDENSER FAN - in this case parameters P4, F11 and F12 will be activated
u2	0	1		0	#	#	Not available / not used
u4	0	1		0	#	#	Not available / not used
u5	-99	99	°C/°F	2	#	#	cell temperature below that at which the door resistors are switched on (“u5 - 2.0 °C/4 °F, only if u1 and/or u11 = 4) (6)
u6	1	120	min	#	#	#	Not availeble / not used
u7	0	99	°C/°F	#	#	#	Not availeble / not used
u8	0	1		0	#	#	Not availeble / not used
u9	0	1		1	1	1	enabling of buzzer 1 = YES

SERIAL NETWORK (MODBUS)

				Freezer	Refrige-rator extended	Refrige-rator	Cabinet type
				-22 /-10	-5/+12	+2/+12	Temperature area
Para-meter	Maxi-mum	Mini-mum	Value	**Factory setting**			
LA	1	247	- - - -	247	247	247	instrument address
Lb	0	3	- - - -	2	2	2	baud rate 0 = 2,400 baud 1 = 4,800 baud 2 = 9,600 baud 3 = 19,200 baud\

LP	0	2	- - - -	2	2	2	parity 0 = none 1 = odd 2 = even

Not relevant or not availble

Changing door hinge side :

To change door hinge side a special lower fitting/hinge is needed:

Artikelnumber:
Door fitting right 763251794
Door fitting left 763251798

Below is shown how to change right hinged to left hinged. From left to right follow the same steps.

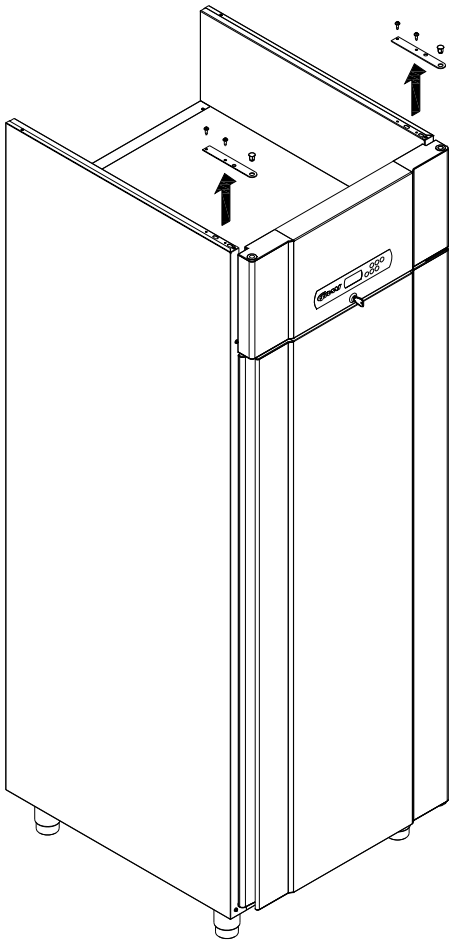

1

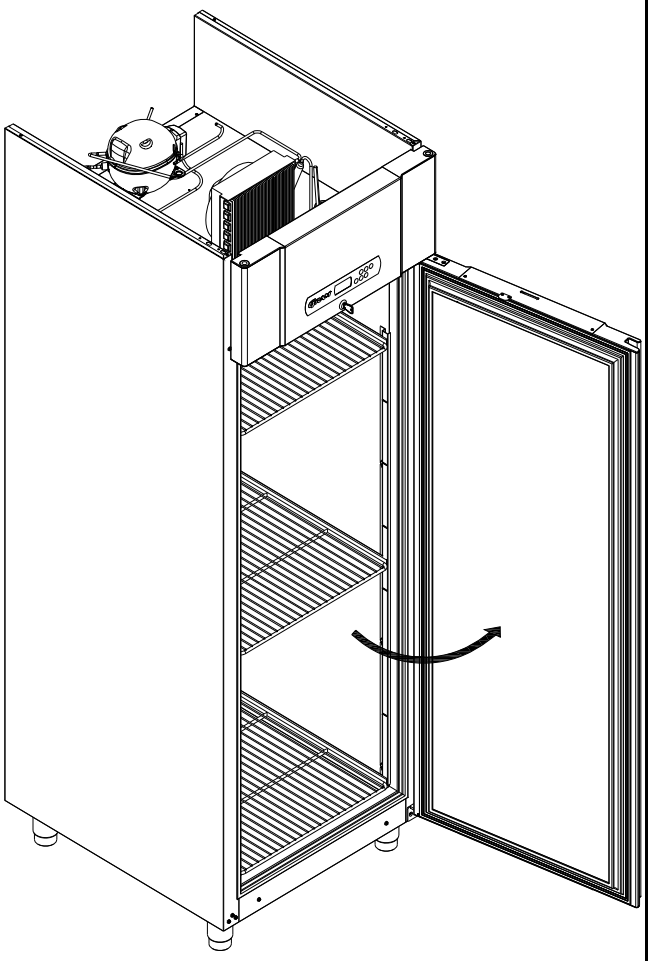

2

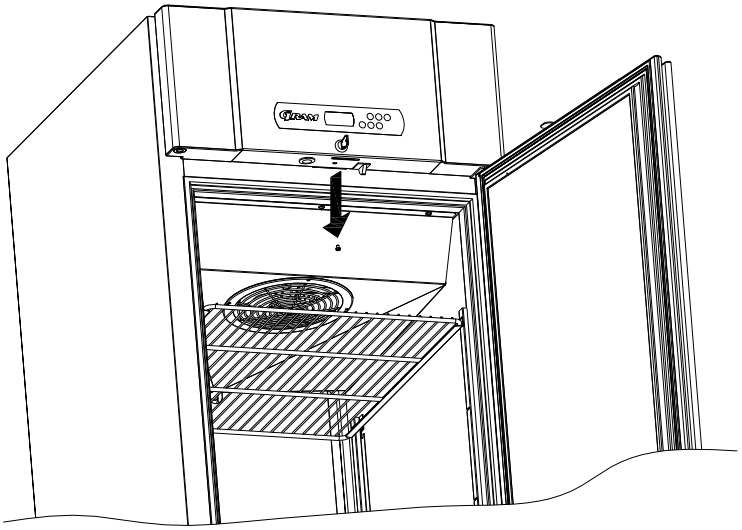

3

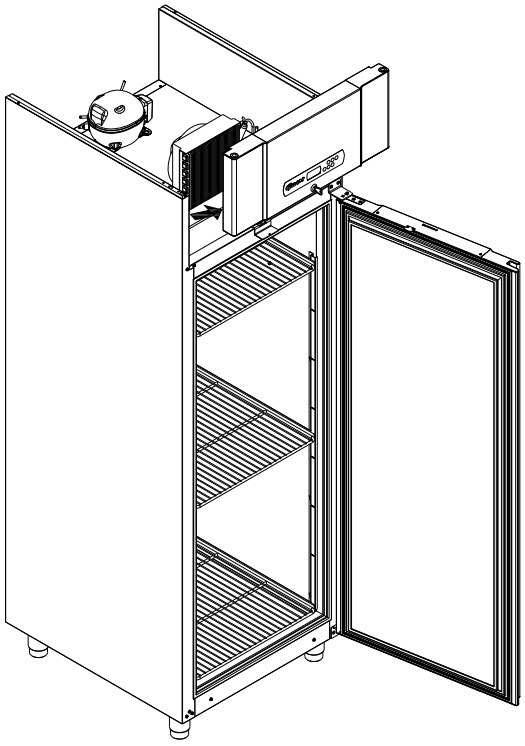

4

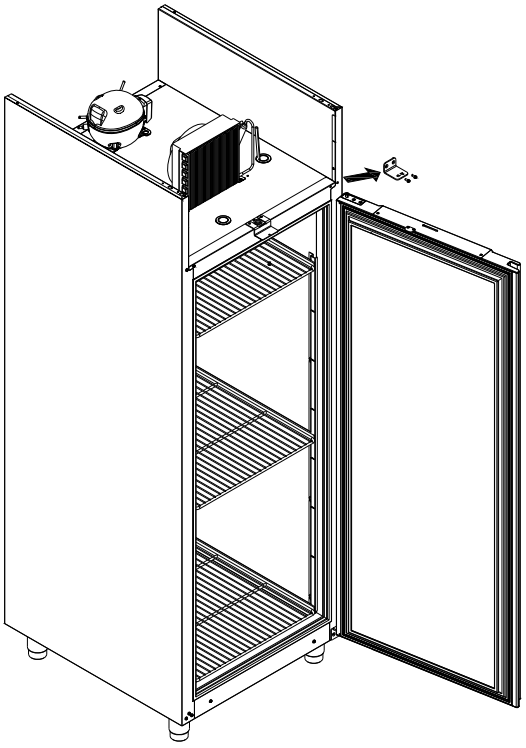

5

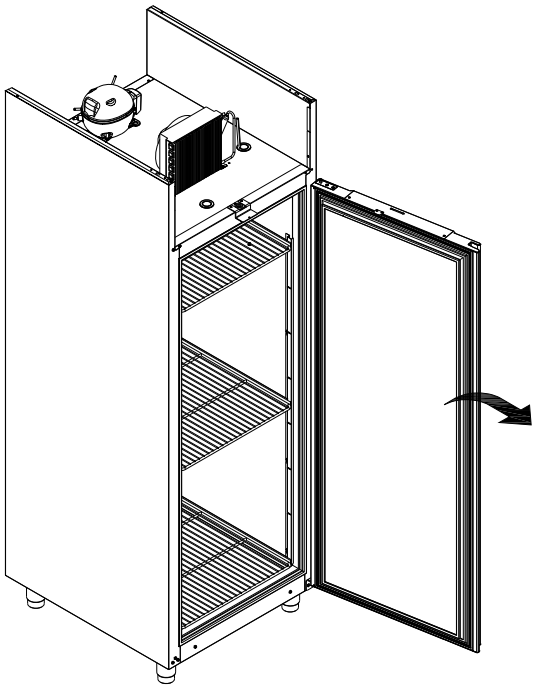

6

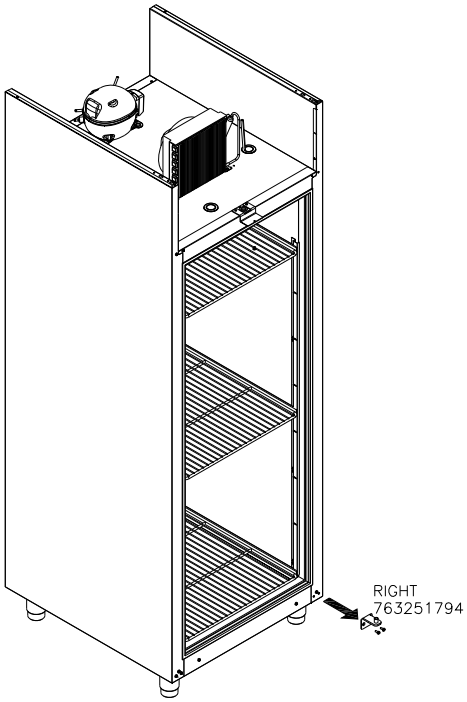

7

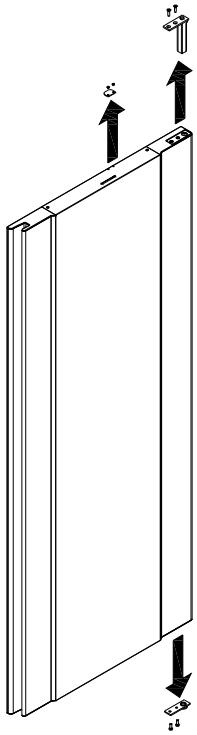

8

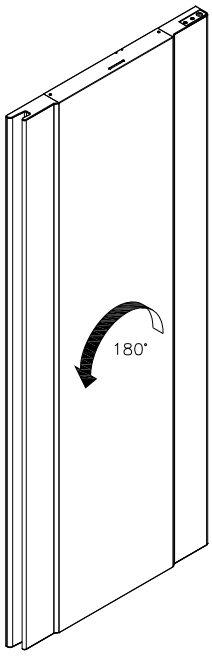

9

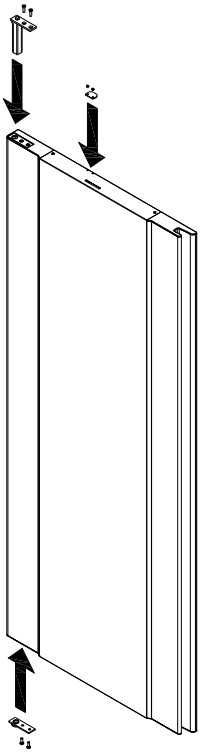

10

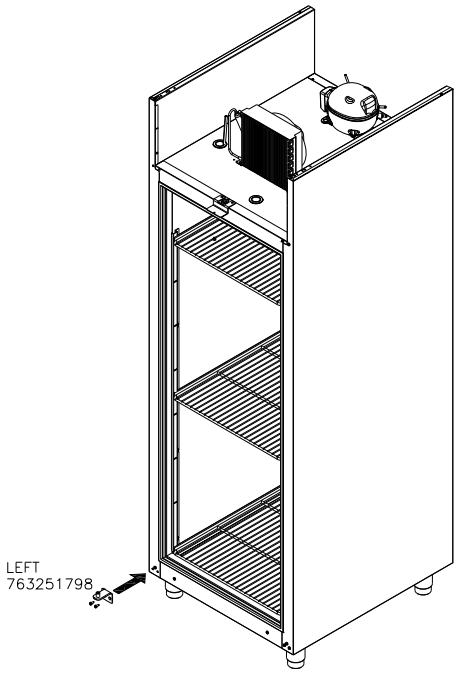

11

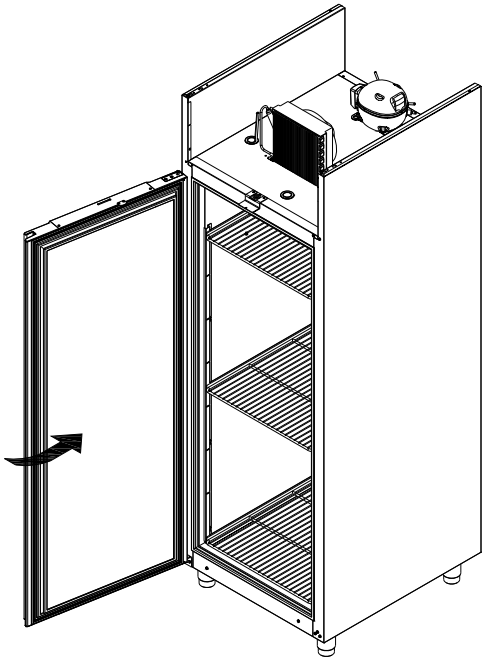

12

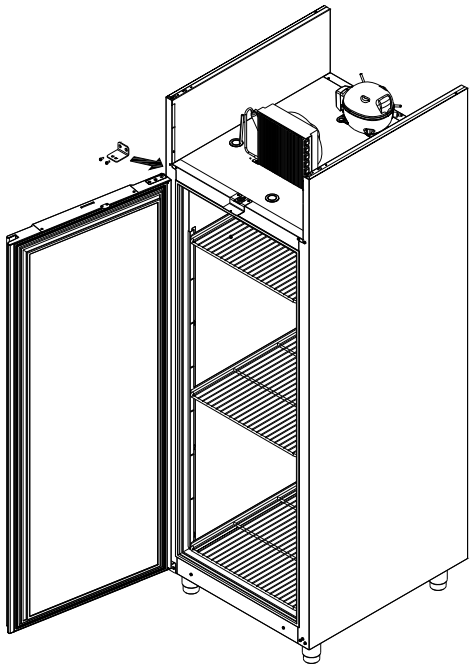

13

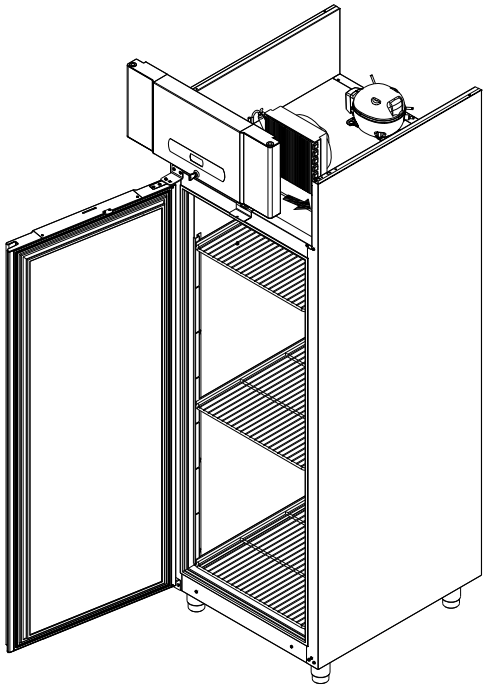

14

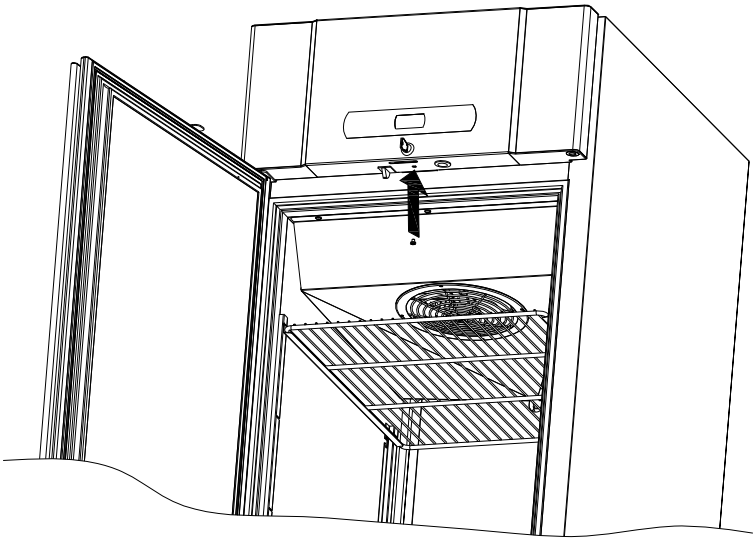

15

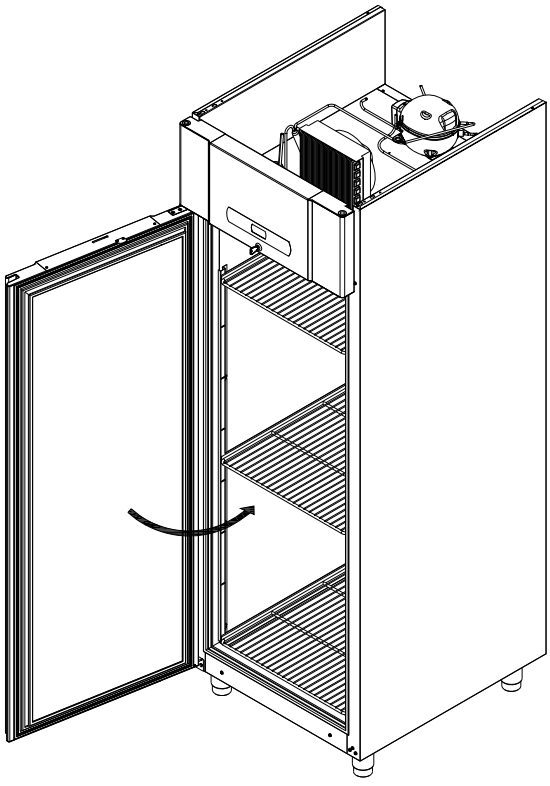

16

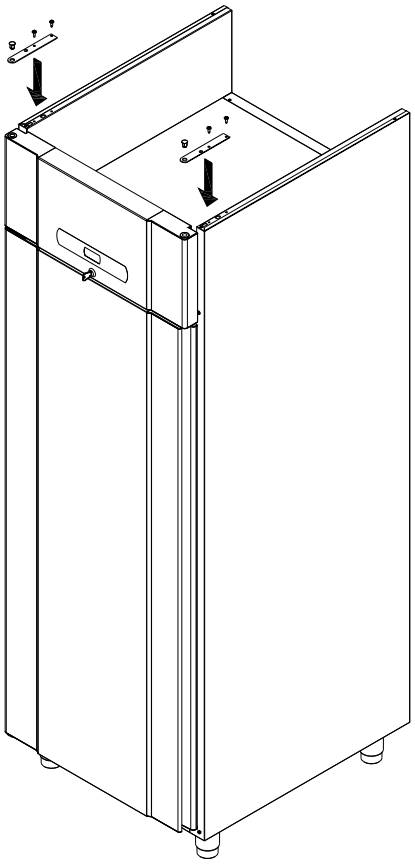

17

Wiring diagram Standard Plus K/M

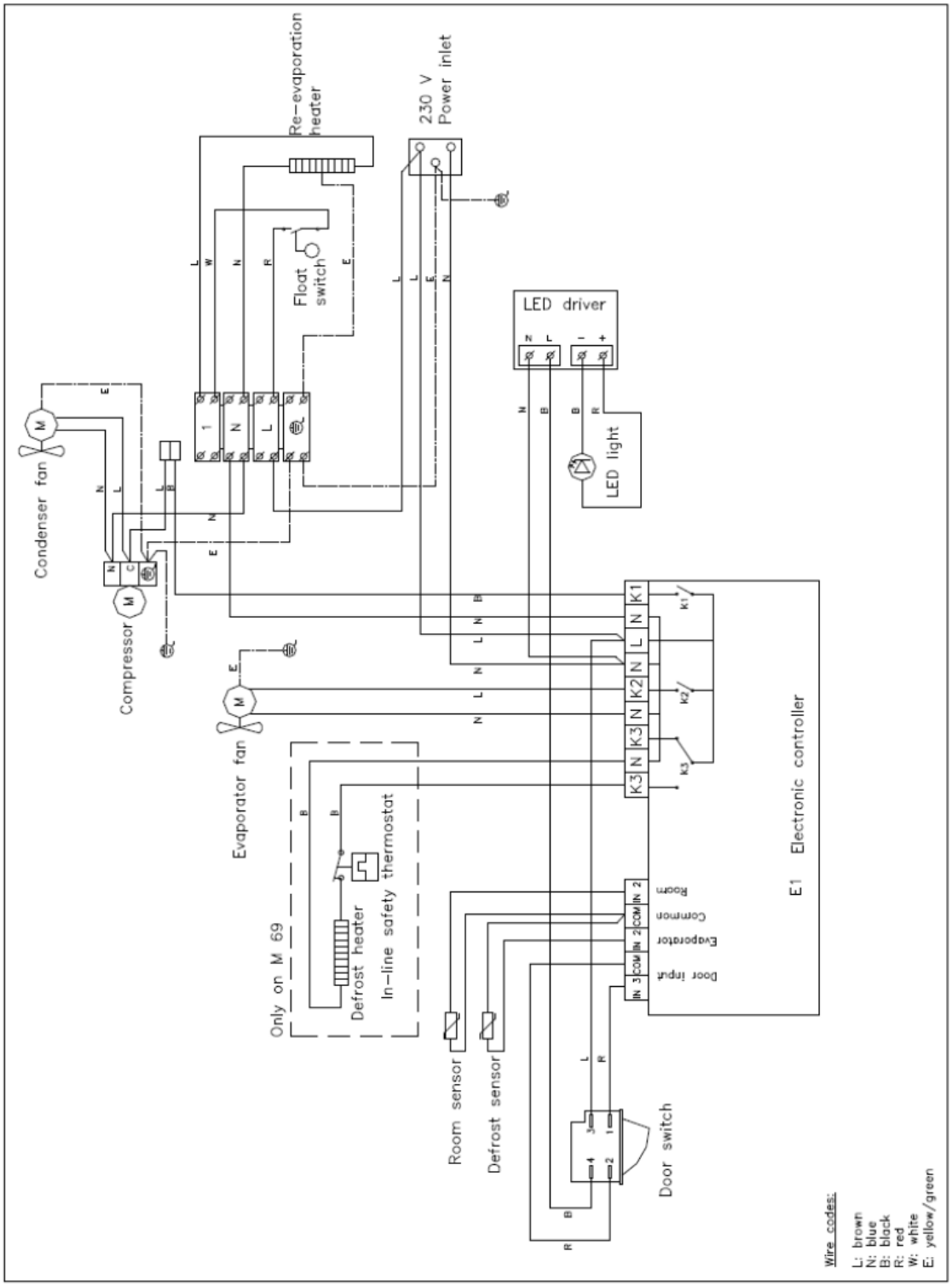

Wiring diagram Standard Plus F

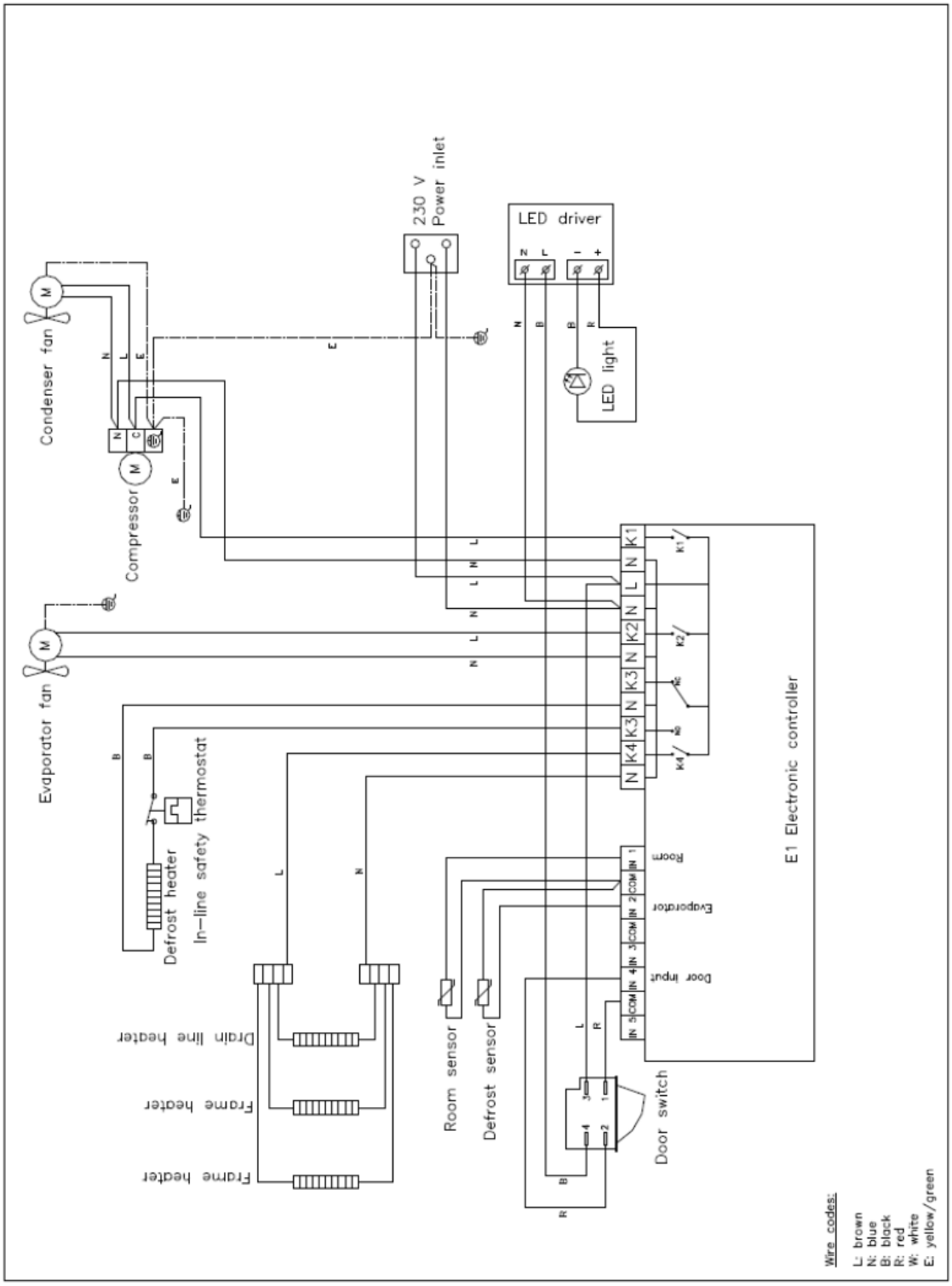

Piping diagram

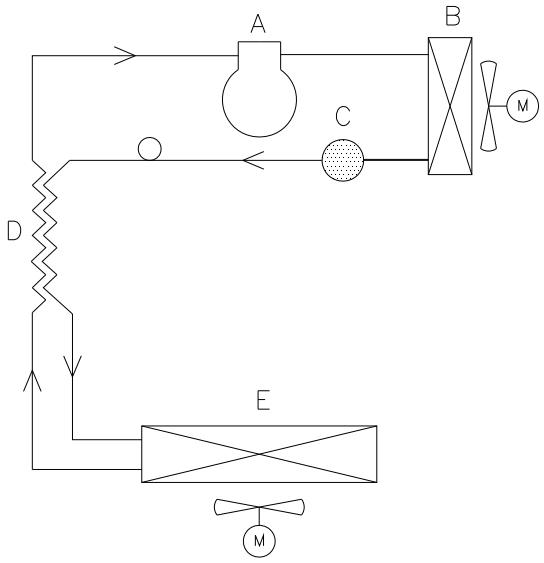

	DK	GB	D
A	Kompressor	Compressor	Kompressor
B	Kondensator	Condenser	Verflüssiger
C	Tørrefilter	Filter drier	Trockenfilter
D	Varmeudveksler	Heat exchanger	Wärmeaustauscher
E	Fordamper	Evaporator	Verdampfer