DAEWOO

• ENGLISH 1

Models: ERF-33.M..., ERF-36.M..., ERF-38.M...,
ERF-39.M..., ERF-41.M...

GRIP HANDLE



HIDDEN HANDLE



DAEWOO
ELECTRONICS

WARNING / SAFETY PRECAUTIONS

To avoid any risk of personal injury, material damage or incorrect use of the appliance, be sure to observe the following safety precautions. (After reading these owner's instructions, please keep them in a safe place for reference). Remember to hand them over to any subsequent owner.

Warning — Indicates that a danger of of death or serious injury exists	**Caution** — Indicates that a risk of personal injury or material damage exists.

WARNING

Do not plug several appliances into the same sockets.
- This could cause overheating and the risk of fire.

Keep the power plug away from the rear of the fridge / freezer .
- A damaged power plug may cause fire due to overheating.

Do not directly spray water inside or outside the fridge / freezer.
- There is a risk of fire or electric shock.

Do not spray water inside or outside the fridge / freezer .
- There is a risk of explosion or fire.

Do not bend the power cord excessively or place heavy articles on it.
- This constitutes a fire hazard. If the power cord is damaged, have it replaced immediately by the manufacturer, its service agent or a similarly qualified person.

Do not insert the power plug with wet hands.
- You may receive an electric shock.

Do not put a container filled with water on top of the appliance.
- If the water spills on to any electrical parts, it may lead to fire or electric shock.

Do not install the fridge / freezer in a damp place, where it could be splashed with water .
- Incorrect insulation of the electrical parts may cause an electric shock or fire.

Do not store volatile and flammable substances in the refrigerator.
- The storage of benzene, thinner, alcohol, ether, LP gas or other such substances may cause an explosion.

Do not disassemble, repair or alter the appliance.
- It may cause fire or abnormal operations, which may lead to injury.

Pull the power plug out of the socket before replacing the interior light in the refrigerator .
- Otherwise, there is a risk of electric shock.

Be sure to earth the appliance.
- Otherwise, it may cause material damage and electric shock.

If you wish to dispose of the fridge / freezer, throw it away after removing the door or its seals.
- In this way, it is not possible for a child to remain trapped inside it.

CAUTION

Do not store too much food in the appliance.
– When you open the door, an item may fall out and cause personal injury or material damage.

Do not put bottles or any kind of glass in the freezer .
– The container may break and cause personal injury.

If the wall socket is loose, do not insert the power plug.
- It may cause electric shock or fire.

Do not disconnect the power cord by pulling on it.
- You may disconnect a wire and cause a short circuit.

Do not store article on top of the appliance.

THERE IS NOTICE BELOW FOR APPLIANCES USING R-600a AS A REFRIGERANT.

NOTICE

Environment–friendly fridge / freezer using R-600a refrigerant and cyclopentane blowing agent
- This product protects the environment by using the R-600a refrigerant and the cyclopentane blowing agent.
- Properties:
  ODP (Ozone Depletion Potential) : 0
  GWP (Global Warming Potential) : Lowest

High–energy efficiency
- Optimized power consumption when using R-600a and cyclopentane.

R-134a or R-600a is used as a refrigerant. You can check the compressor label on the rear of the appliance and the rating label inside the fridge.

This appliance contains a small amount of isobutane refrigerant (R600a), a natural gas with high environmental compatibility, but it is also combustible. When transporting and installing the appliance, care should be taken to ensure that no parts of the refrigerating circuit are damaged.

Refrigerant squirting out of the pipes could ignite or cause an eye injury. If a leak is detected, avoid any naked flames or potential sources of ignition and air the room in which the appliance is standing for several minutes.
- In order to avoid the creation of a flammable gas-air mixture if a leak in the refrigerating circuit occurs, the size of the room in which the appliance may be sited depends on the amount of refrigerant used. The room must be 1m^3 in size for every 8g of R600a refrigerant inside the appliance. The amount of refrigerant in your particular appliance is shown on the identification plate inside the appliance.
- Never start up an appliance showing any signs of damage. If in doubt, consult your dealer.

WARNING

- Keep ventilation openings in the appliance enclosure or in the built-in structure, clear of obstruction.
- Do not use mechanical devices or other means to accelerate the defrosting process, other than those recommended by the manufacturer.
- Do not damage the refrigerant circuit.
- Do not use electrical appliances inside the food storage compartments of the appliance, useless they are of a type recommended by the manufacturer.

- When you open or close the door, the articles may fall and cause personal injury or material damage.
  Do not store pharmaceutical products, scientific material or other temperature-sensitive products in the refrigerator .
- Products that require strict temperature controls must not be stored in the refrigerator.
  Do not let a child hang from the door .
  Do not touch any containers and food in the freezer with wet hands.
- It may cause frostbite.
  Remove any foreign matter from the po wer plug pins.
- Otherwise, there is a risk of fire.
  Do not insert your hand into the bottom area of appliance.
- Any sharp edges may cause personal injury.
  After unplugging the appliance, wait for at least fiv e minutes before plugging it again to the wall socket.
- Abnormal operation of the freezer may cause material damage.
  If the appliance is not be used for a long period of time, pull out the po wer plug.
- Any deterioration in the insulation may cause fire.
  Do not let children touch or play with the control panel on the front of the appliance.
- Do not allow children to play with this appliance.
- Do not stand or lean on the base panel, pull-out parts, door and so on.
- Repairs and maintenance of the appliance should only be performed by a qualified technician. Incorrect repairs by an unqualified person are a potential source of danger that may have critical consequences for the user of the appliance.
- Never put ice cubes or ice lollies straight from the freezer into your mouth. (The low temperature may cause “cold burns”.)

CAUTION

The refrigerant used in fridge / freezers and the gases in the insulation material require special disposal procedures. Ensure that none of the pipes on the back of the appliance are damaged prior to disposal.

DISPOSAL

INSTALLING THE FRIDGE / FREEZER

1. Allow an adequate space and install the fridge / freezer on a firm, level floor.
   - If the appliance is not level, there may be unusual noises and poor cooling.
2. Clean the fridge / Freezer
   - Wipe and clean the inside and outside of appliance with a damp cloth.
3. Plug the fridge / freezer into a wall socket used exclusively by this appliance.
   - This appliance must be properly earthed.
4. Place the food in the fridge / freezer.
   - It is recommended that you wait for the appliance to cool for 3~4 hours before storing food in it.
5. Keep 30cm of space between the refrigerator and the back wall.
   - Insufficient space causes the noise of vibration, weakening of refrigerating power and the waste of electricity
6. The electrical plug must be accessible without moving the set.
7. For ambient temperature below 10°C, the perfect performance of our refrigerator can not be achieved.

WARNING

Use of an earthed socket exclusively
for the appliance:

- If you are using a socket with an earthed terminal, you do not require a separate earthed connection.

Use of a non-earthed socket:

- Connect the “earthed wire” to the steel plate and bury it at depth of at least 25cm in the ground.

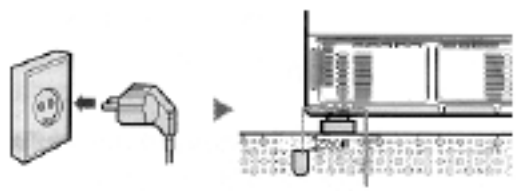

LEVELING

If the front of the appliance is slightly higher than the rear, the door can be opened and closed more easily.

1. The appliance tilts down to the left. Turn the left adjusting leg in the direction of the arrow until the appliance is level.	
2. The appliance tilts down to the right. Turn the right adjusting leg in the direction of the arrow until the appliance is level.	

PREPARING THE FRIDGE / FREEZER

To prepare your appliance for use and check that it is running correctly, take the following steps.

1. Install removed all shelves and compartments during transport in the correct positions.
2. Clean the fridge/freezer and accessories to remove any dust that accumulated during packing and shipping.
3. The interior light should be turned on when the refrigerator door’s opened.
4. Set the temperature control to the coldest temperature and let the refrigerator operate for one hour. The freezer should get slightly chilled and the motor should run smoothly with a soft hum and no noise. Your fridge / freezer is operated by a compressor which switches “on and off” to maintain the internal temperature. When the compressor is new, it requires running in for a period of up to five months. During this period, it may be slightly noisy. This is quite normal and does not represent a fault.
5. Store food once the temperature in the refrigerator is sufficiently low. It takes a few hours after starting the refrigerator to reach the proper temperature.
   If the appliance does not operate correctly, check the electricity supply. If the problem persists, contact your dealer.

CE
This product has been designed, constructed and marketed in accordance with EEC directives 73/23, 89/336, 96/57 and 93/68.

Please read this manual carefully to ensure maximum satisfaction from your appliance. Keep the manual in a safe place for future reference. For drawings referenced in the text below, see flap at back of the manual.

ABOUT THIS PRODUCT

- This product is designed for domestic household use only.
- Use the 4-star freezer compartment
  - to freeze fresh and cooked foods,
  - to store deep-frozen and frozen products,
  - to make ice-cubes.
- Use the refrigerator compartment
  - to store fresh foods,
  - to cool drinks.
- The freezer and refrigerator compartments defrost automatically.
- Owing to cool air circulation (multi-airflow system) an even temperature is maintained on every shelf of the refrigerator compartment. The temperature in the specially designed low temperature compartment is kept at approximately 0°C, extending nutritional value and original freshness of the food.

BEFORE CONNECTING TO THE MAINS

1. Wait 2 hours after delivery before you connect the appliance to the power supply, in order to ensure trouble-free operation.
2. ***In the UK only.*** Electrical connections:
   - Check that the voltage on the rating plate (8) corresponds to the voltage in your home.
   - The wires of the mains lead fitted to this appliance are coloured in accordance with the following code:

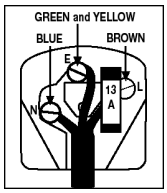

GREEN and YELLOW = EARTH
(GREEN or GREEN and YELLOW)

BLUE = NEUTRAL (BLACK)

BROWN = LIVE (RED)

As the colours of the wires in the mains lead fitted to this appliance may not correspond with the coloured markings identifying the terminals in the plug, proceed as follows:

- The wire which is coloured GREEN and YELLOW must be connected to the terminal in the plug which is marked with the letter “E” or by the earth symbol (⏚) or coloured GREEN or GREEN and YELLOW.
- The wire which is coloured BLUE must be connected to the terminal which is marked with the letter “N” or coloured BLACK.
- The wire which is coloured BROWN must be connected to the terminal which is marked with the letter “L” or coloured RED.

If the terminals in the plug are unmarked or you are in any doubt as to the correct connections, consult a qualified electrician.

3. ***In the UK only.*** Moulded plugs:
   - Applicable only if moulded plug is fitted.
   - Should it be necessary to remove a moulded on plug from the mains cable, it should be cut off and replaced with a suitable replacement.
   - The moulded plug cannot be used for any other appliance, therefore remove the fuse and dispose immediately and safely to prevent anyone, especially children, from plugging it into a wall socket, which will create a safety hazard.

DESCRIPTION OF YOUR REFRIGERATOR

See flap at the back of the manual.

1. Shelves (The material of shelf be changed by model.)
2. Cover vegetable case (The material be changed by model).
3. Interior light for refrigerator compartment.
4. Multi air flow duct.
5. Refrigerator & freezer temperature control knob.
6. Low temperature compartment (Only in some models).
7. Vegetable case: 1 box type or 2 boxes type. In case of 1 box type must be deleted (15).
8. Rating plate. It´s attached in the refrigerator compartment on the left-hand side next to the vegetable case.(with serial number).
9. Ice cube tray.
10. Case for storing & freezing.
11. Butter pocket.
12. Egg pocket.
13. Egg tray.
14. Bottle pocket.
15. R door pocket.
16. Adjustable foot.

- Should the mains lead ever require a replacement, it is essential that this operation be carried out by a qualified electrician and should only be replaced with a flexible cord obtained from the manufacturer.
- After replacement of a fuse in the plug, the fuse cover must be refitted. If the fuse cover is lost a replacement cover must be obtained. The colour of the correct replacement fuse cover is that of the coloured insert in the base of the plug or the colour that is embossed in words in the base of the plug recess or elsewhere on the plug. Always state this colour when ordering a replacement fuse cover.
- Only 13 amp. replacement fuses which are ASTA approved to BS 1362 should be fitted.

4. Check the rating plate (8) for voltage information.
5. The socket should be easily accessible and not directly behind the appliance.
6. Electrical connections must be made in accordance with local regulations. The appliance must be earthed as described by law (connected through a properly earthed plug and socket). The manufacturer rejects all liability for injury to persons and animals or damage to property resulting from failure to comply with this requirement.
7. A 10A fuse or one of a higher value must be used in the socket circuit.
8. If the appliance plug and the wall socket are incompatible, the socket must be replaced by a qualified electrician.
9. If the supply cord is damaged, it must be replaced by the manufacturer or his service agent or a similarly qualified person in order to avoid hazard.
10. Do not use extension leads or multiple adapters, etc.
11. In some countries a plug has to be fitted. Make sure that the installation and electrical connections are performed by a qualified technician in compliance with the manufacturer's instructions and current local safety regulations. The wires in the mains lead are coloured in accordance with the following code:
    - green/yellow = earth
    - blue = neutral
    - brown = live.

DISCONNECTION

Note: *does not apply in the UK.*

Electrical disconnection: remove the plug from the mains, or (if applicable) disconnect the two-pole circuit breaker upstream from the socket.

PROTECTING THE ENVIRONMENT

- The packaging may be completely recycled, as confirmed by the recycling symbol; follow local disposal regulations.
- The appliance is manufactured from reusable materials.
- When you decide to scrap this product, please check the cable to be disconnected from the mains. Then cut off the cable and dispose of the product according to local waste disposal laws.
- This product is free of CFC's (cooling circuit contains R134a or R-600a). Check the compressor label on the rear of the appliance or the rating label inside the fridge to see which refrigerant is used for your refrigerator.

IMPORTANT

1. Although this product was carefully checked before packing, please check the product:
   - for damage;
   - for correct closing of the doors.

   Complaints must be reported to your retailer within 24 hours of delivery.
2. Installation instructions (7 drawings below).
3. Keep potentially hazardous packing materials (plastic bags, etc.) out of reach of children to prevent the risk of trapping and suffocation.

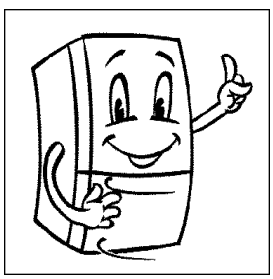

Check for damages and correct closing of the doors.

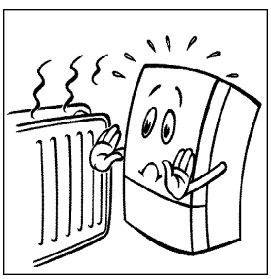

Not in the vicinity of a heat source.

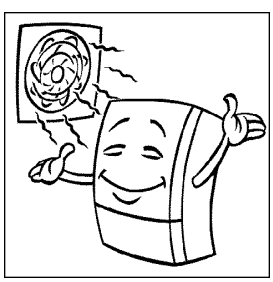

Keep room dry and well ventilated.

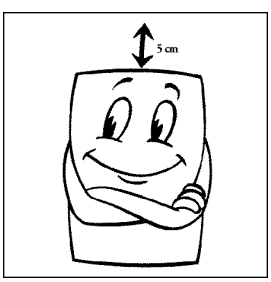

Keep more than 5cm distance space at the top for ventilation.

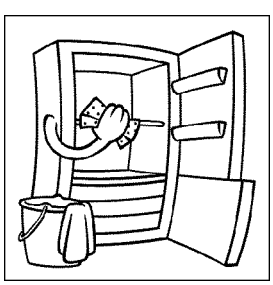

Clean interior with a damp cloth.

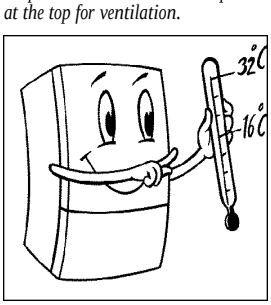

Best room temperature range - +16°C to +32°C.

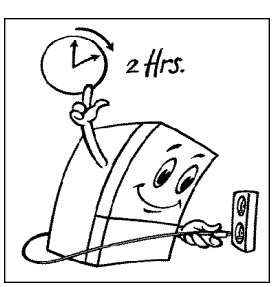

◀ *Wait 2 hours before connecting to the mains.*

GENERAL RECOMMENDATIONS

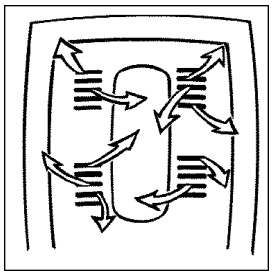

Keep air vents open.

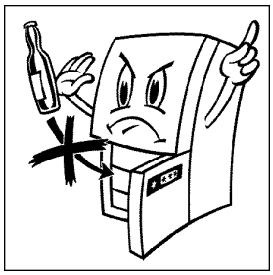

No glass bottles in the freezer compartments. The bottles might burst.

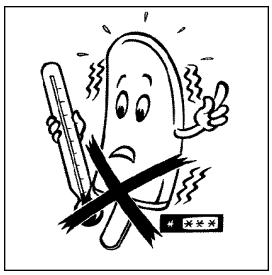

Ice cubes and ice lollies straight out of the freezer are too cold for consuming.
They may cause 'cold' burns.

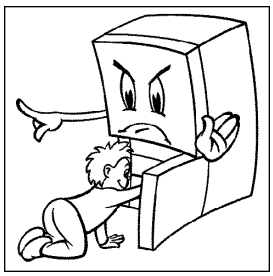

Do not allow children to play or hide in the refrigerator to prevent the risk of trapping and suffocation.

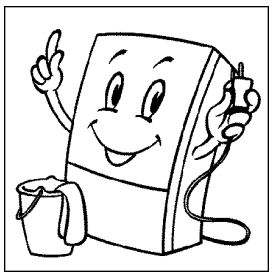

Always unplug before cleaning and servicing.

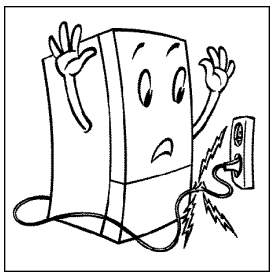

If the supply cord is damaged, it must be replaced by the manufacturer or its service agent or a similarly qualified person in order to avoid a hazard.

HOW TO USE THE REFRIGERATOR COMPARTMENT

Connet the lead to the mains. (At least wait 2 hours after delivery: refer to section "Before connecting to the mains)
Food can be stored after 3 to 4 hours cooling.

- the interior light switches on when the door is opened;
- the compressor operates and starts cooling;

The suitable storage temperature for fresh food is provided in the "MID" position at an ambient temperature of 16 ~ 32°C.

REFRIGERATOR AND FREEZER TEMPERATURE CONTROL KNOB (5) SEE FLAP AT BACK OF MANUAL.

(Knob is located inside the refrigerator compartment.)
"LOW": warmer than position "MID"
"MID": normal storing temperature
"HIGH": colder than position "MID"

Note: *When you set "refrigerator and freezer temperature control knob"(5) LOW, MID, and HIGH then the temperature of the refrigerator and freezer are automatically adjusted.*

NOTES ON FREEZING AND STORAGE

1. Follow storage times indicated by the frozen food manufacturer. Make sure that the packaging is undamaged.
2. Save energy: minimize opening of the door by storing identical food items together.
3. Items suitable for freezing: meat, poultry, fresh fish, vegetables, fruits, dairy products, bread, baked goods, pre-cooked meals.
4. Items not suitable for freezing: lettuces, radishes, grapes, whole apples and pears, fatty meats.
5. When you freeze food yourself, pack it in appropriate quantities. In order to freeze food right through do not exceed the following quantities to best preserve the quality:
   - fruit and vegetables: up to 1 kg,
   - meat: up to 2.5 kg.
6. Blanch vegetables after washing and cutting them. (2-3 minutes in boiling water; then quickly cool them down in cold water. When you use a steamer or microwave oven, follow the operating instructions).
7. Keep packs dry in order to avoid them freezing together.
8. Freeze fresh food separately from already frozen foods.
9. Do not salt or season fresh food or blanched vegetables before freezing. Other foods may be lightly salted or seasoned. The intensity of flavour of some spices can change.
10. Use materials or containers specially suitable for freezing in order to avoid loss of quality.
11. Write contents and date of freezing on the packs. Do not exceed the storage time indicated in order to preserve quality.
12. Do not freeze bottles or cans with carbonated drinks as they might burst.
13. Take out as much food as is immediately required for thawing. Prepare it as soon as possible after thawing.

WHEN PURCHASING FROZEN FOOD

1. Make sure that the packaging is undamaged (damage may have caused the food to deteriorate). Bulging packs or packs which are marked with liquid stains could have been improperly stored and may have been partially thawed.
2. Leave frozen food purchases until last and transport the items in insulated bags.
3. Place the items in the freezer as soon as possible.
4. Do not refreeze partially thawed food. Consume it within 24 hours.
5. Observe the date of consumption and storage information.

CLEANING

1. Always disconnect the appliance from the mains supply.
2. Do not use abrasives. Periodically clean with a sponge dampened in lukewarm water. A neutral pH detergent may be used. Rinse and dry with a soft cloth.
3. Wipe the outside with a soft cloth dampened in water.
4. Periodically clean the front grille and the radiator at the back with a vacuum cleaner or a brush.

PROLONGED DISUSE

1. Empty the refrigerator and freezer compartments.
2. Unplug the appliance from the mains.
3. Clean and dry both compartments.
4. Leave the doors open to prevent the formation of unpleasant odours.

AFTER SALES SERVICE

Before contacting our After Sales Service Department:

1. Try to remedy the problem (please read section "trouble shooting guide").
2. Restart the appliance to check whether the fault repeats. If the malfunction persists, switch off the appliance and try again after an hour.
3. If the malfunction still persists, then contact our Customer Service, specifying:
   - the nature of the problem,
   - the appliance model number,
   - the service number (please see the rating plate 8),
   - your full address, telephone number and area code.

Note: *door opening direction changes carried out by our Customer Service are not covered by the terms of guarantee.*

TROUBLESHOOTING GUIDE

1. The appliance does not work. Check:
   - power failure,
   - properly inserted plug,
   - (if applicable) connection of the two-pole circuit breaker,
   - damage to the mains lead,
   - correct setting of the temperature controls (5).
2. The temperature inside the compartments is not low enough. Check for:
   - closure of the doors,
   - installation near a heat source,
   - correct setting of the refrigerator/freezer control knob (5),
   - inhibited air circulation.
3. The refrigerator compartment temperature is too low. Check for:
   - correct setting of the temperature controls (5).
4. The internal light does not work. Refer to point 1 and then:
   - unplug the appliance from the mains,
   - check the bulb and replace if necessary (max.15W).
   - to change the lamp first remove the window lamp by pushing lower part upward and pulling forward.
   - take out the lamp and replace it for a new one.
   - finally set again window lamp on its place.

APPLIANCE PACKAGING INFORMATION

All material are environmentally sound! They can be dumped or burned at an incinerating plant without danger!

About the materials: The plastics can be recycled and are identified as follows:

- PE : for polyethylene, e.g. the outer covering and the bags in the interior.
- PS : for polystyrene foam, e.g. the pads, which are all free of chlorofluorocarbon.

The carton parts are made from recycled paper and should be disposed of at a waste-paper recycling collection location.

DISPOSAL OF OLD APPLIANCES

For environmental reasons, refrigeration appliances must be disposed of properly. This applies to your old appliance, and -at the end of its service life- for your new appliance as well.

Warning! Before disposing of old appliances make them inoperable. Remove plug from mains, server the power cable, remove or destroy any snap or latch closures. This eliminates the danger that playing children lock themselves into the appliance (danger of suffocation!) or place themselves into other life-endangering situations.

Disposal:

- The appliance may not be disposed of with domestic waste or bulky refuse.
- The refrigerant circuit, especially the heat exchanger at back of the appliance, may not be damaged.
- Information concerning collection schedules or locations can be obtained from the local disposal authorities or town hall.

NOTICE

The lamp of the refrigerator can be switched off even though the doors are not completely closed.

Note: *The edge of the refrigerator door and the front side of the refrigerator cabinet may be hot. This is normal and intended to prevent the formation of condensation.*
Gurgling noises etc. inside the refrigerating circuit are normal.

GUARANTEE CONDITIONS

We DAEWOO, undertake that if within 12 months from the date of purchase, this DAEWOO appliance or any part there of is proved to be defective by reasons only of faulty workmanship or materials, we will, at our option repair or replace the same FREE OF ANY CHARGE of labour, materials or carriage on conditions that:

- The appliance has been correctly installed and used only on the electricity supply stated on the rating plate.
- The appliance has been used for normal domestic purposes only and in accordance with the manufacturers operating and maintenance instructions.
- The appliance has not been serviced, maintained, repaired, taken apart or tampered with, by any person NOT authorised by DAEWOO.
- All service work under this guarantee must be undertaken by a DAEWOO service representative or authorised agent.
- Any appliance or defective part replaced shall become the property of DAEWOO.
- This guarantee is in addition to your statutory and other legal rights.

EXCLUSIONS:

This guarantee does not cover:

- Damage or calls resulting from transportation, improper use or neglect, the replacement of any light bulbs or removable parts of glass or plastic.
- The light bulb is not covered by this warranty.
- Cost incurred for calls to put right an appliance which is improperly installed or calls made outside the United Kingdom.
- Appliance found to be in use within a commercial environment, plus those which are subject to rental agreements.
- Products of DAEWOO manufacture which are not marketed by DAEWOO Electronics Sales UK Ltd.
- EEC Countries. The standard guarantee is applicable but subject to the owners responsibility and cost to ensure the appliance meets the standards set by the country of which the product is taken. The DAEWOO Electronics Sales office in the country, will be pleased to advise further.

Should you require after sales service for this product, please contact DAEWOO Electronics Sales, Customer Services department on 01189 282830, or the dealer you purchased the item from.

ERF-33.M...

Refrigerator

HIGH 1ºC
MID 3ºC
LOW 5ºC

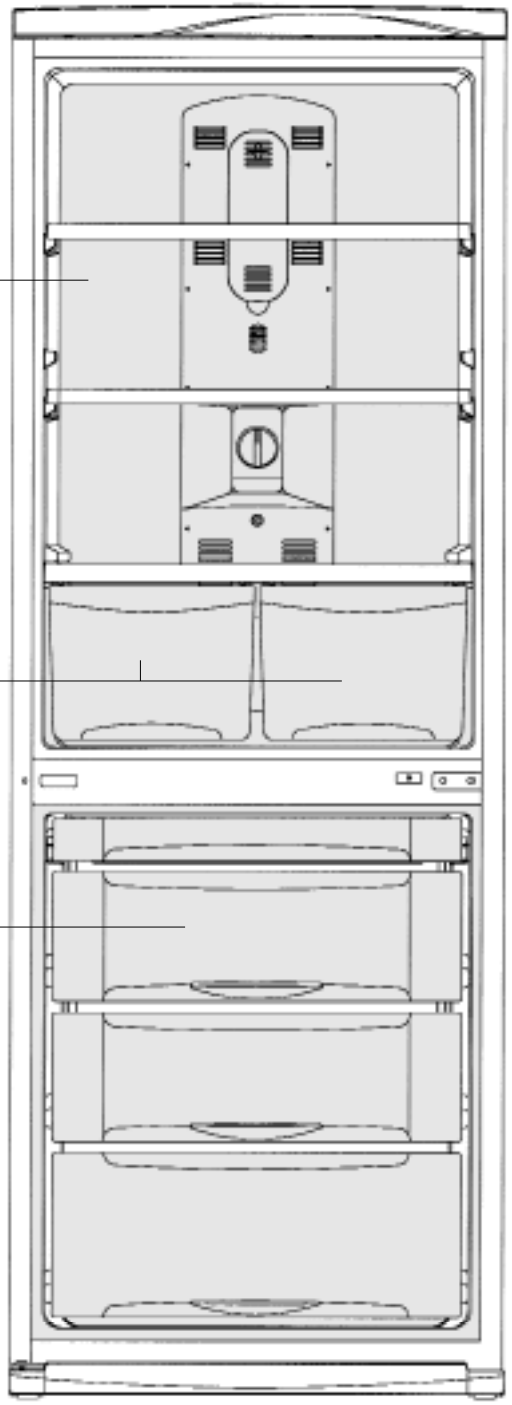

Vegetables compartment

Tª 0C ~ 5º C

Freezer

HIGH -22ºC
MID -20ºC
LOW -18ºC

ERF-33.M...

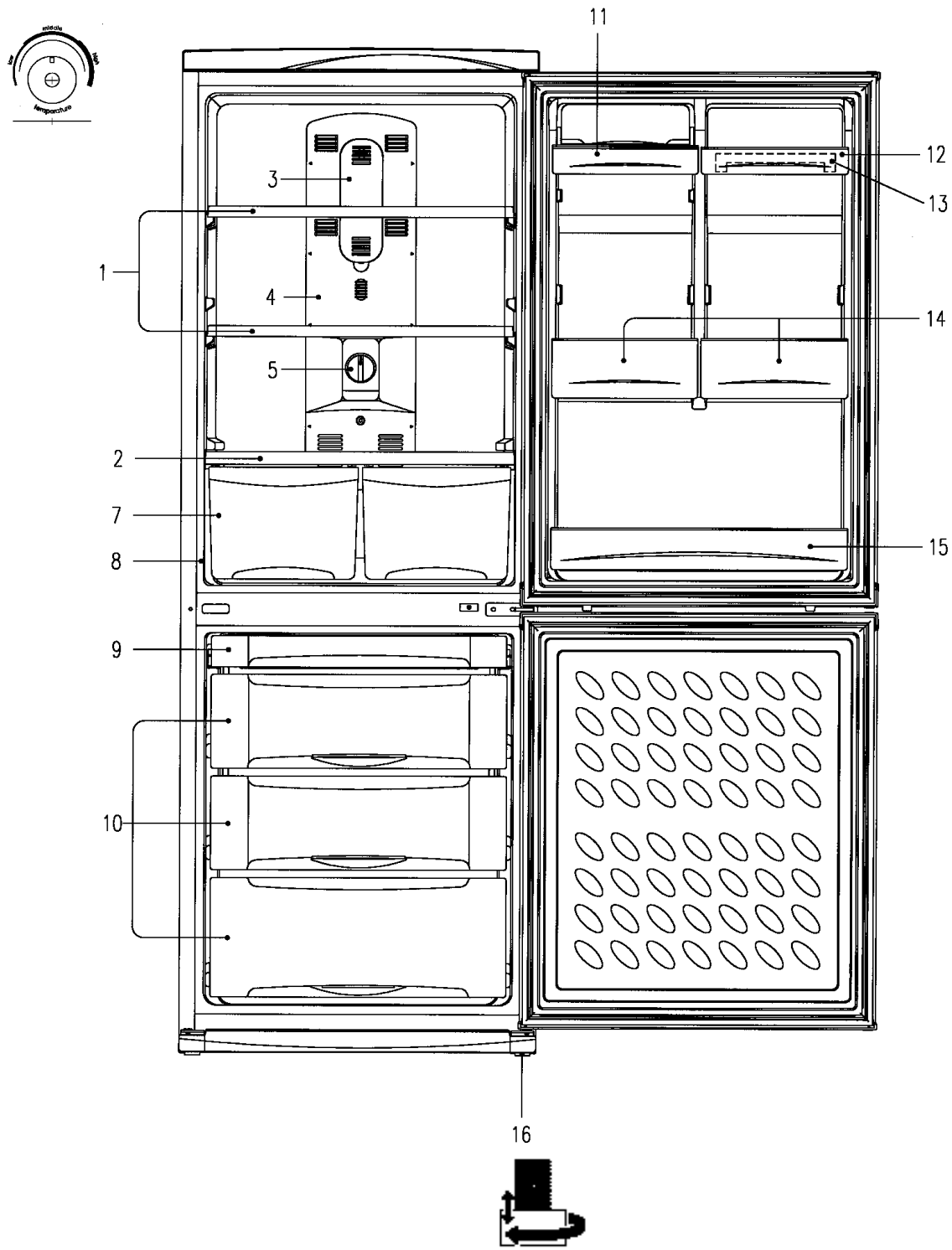

ERF-33.M... (Hidden Handle)

- How to reverse doors in 5 steps. (Hidden Handle).

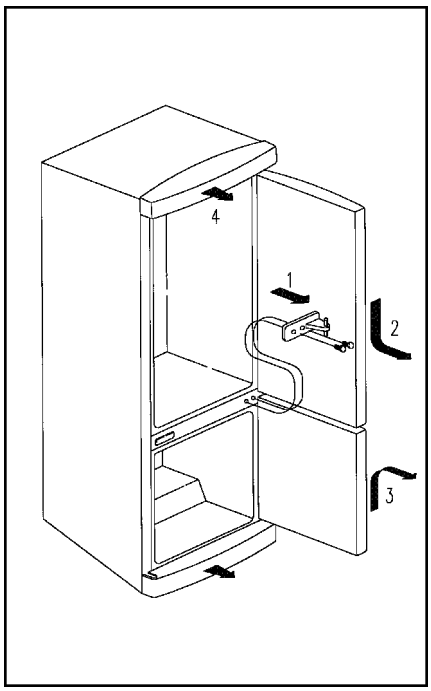

1

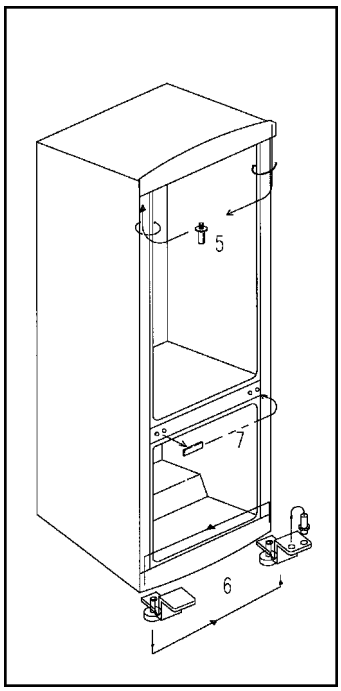

2

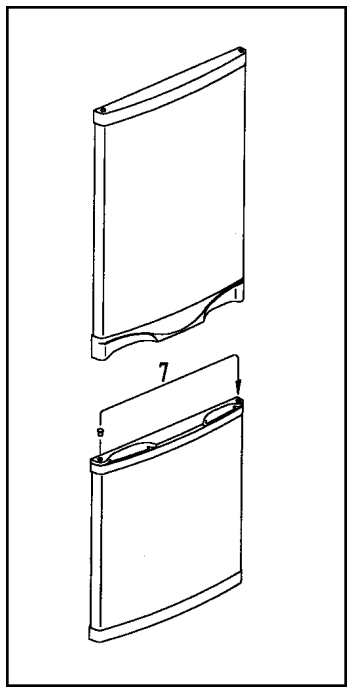

3

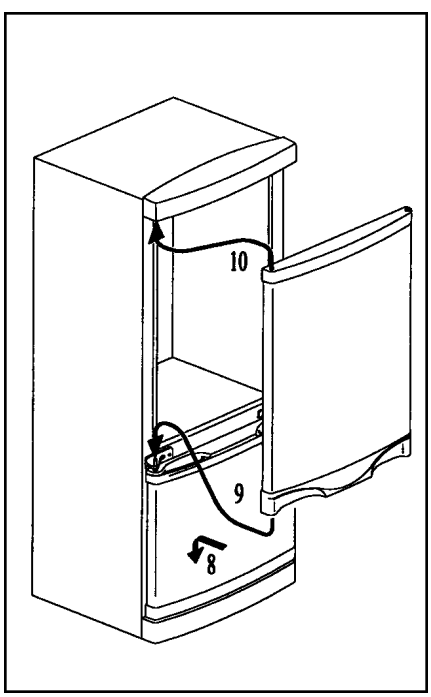

4

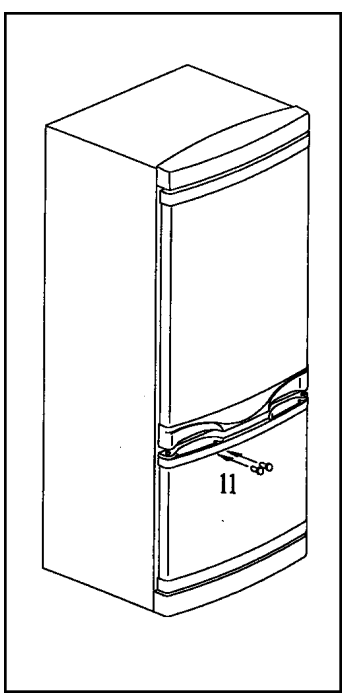

5

- How to mount handgrips.

ERF-36.M..., ERF-39.M..., ERF-41.M...

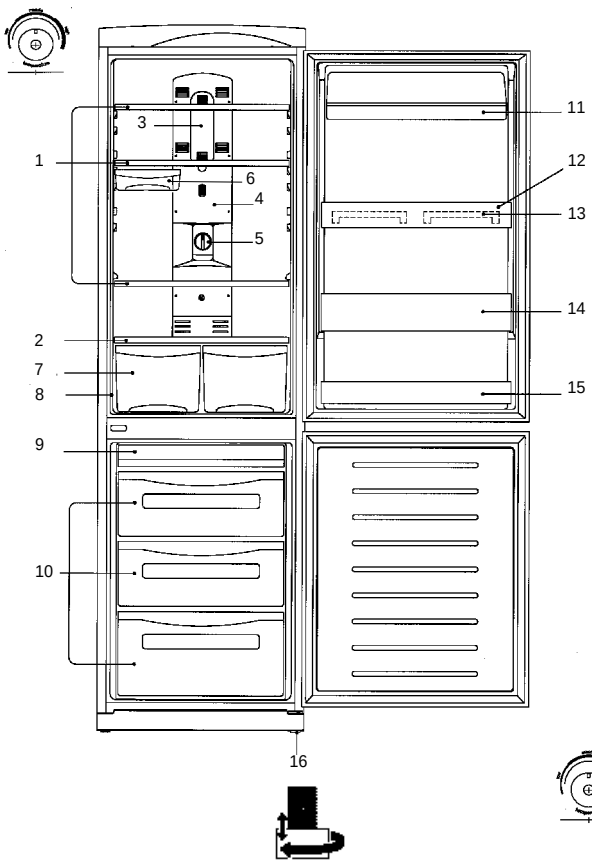

ERF-38.M...

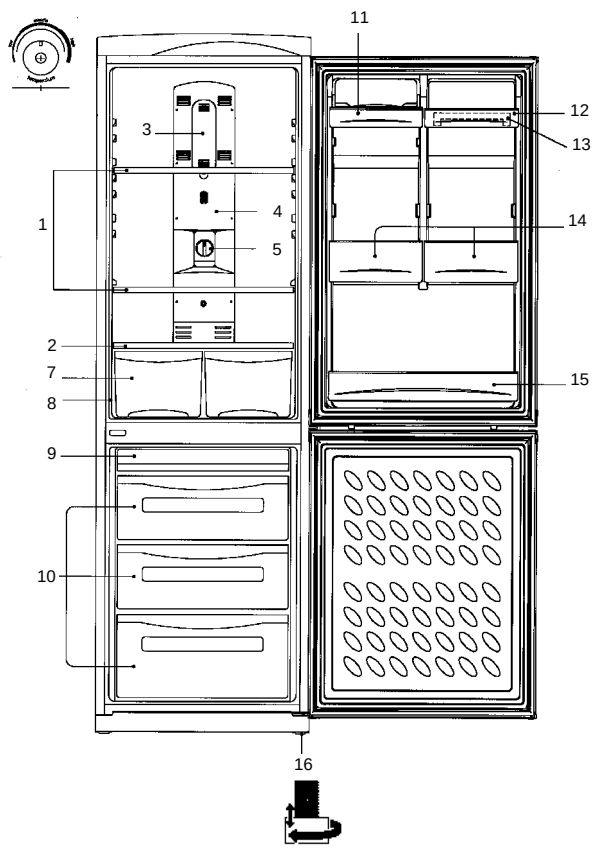

ERF-36.M..., ERF-38.M..., ERF-39.M..., ERF-41.M...

Refrigerator

HIGH 1ºC
MID 3ºC
LOW 5ºC

Cold meats compartment

2ºC ~ 2ºC

Vegetables compartment

Tª 0C ~ 5º C

Freezer

HIGH -25ºC
MID -20ºC
LOW -18ºC

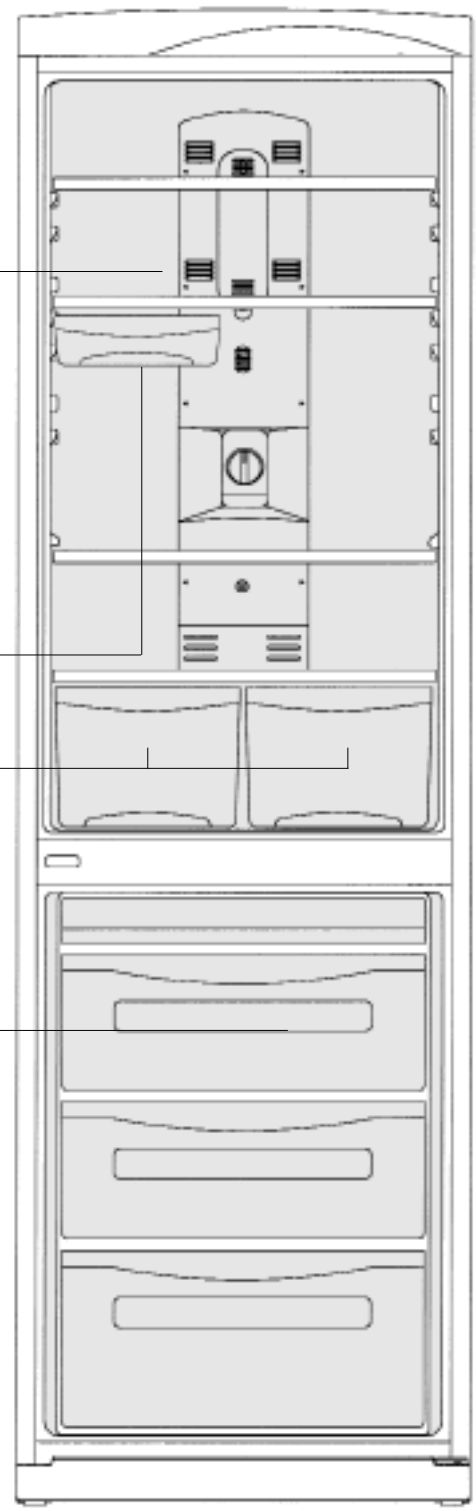

ERF-36.M..., ERF-38.M..., ERF-39.M..., ERF-41.M... (Grip)

- How to reverse doors in 5 steps. (Grip Handle).

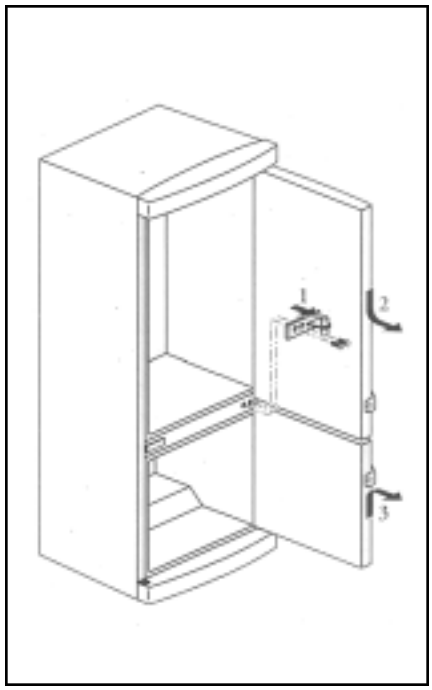

1

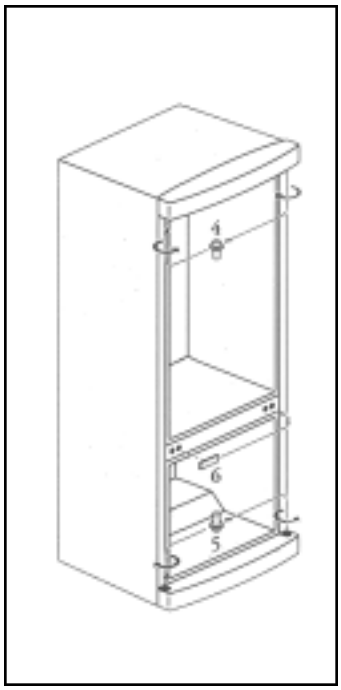

2

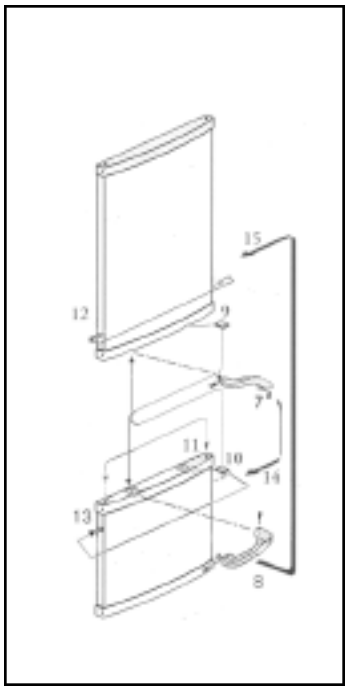

3

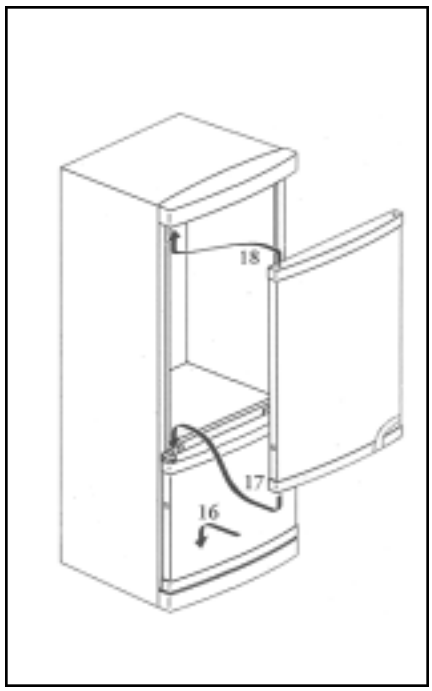

4

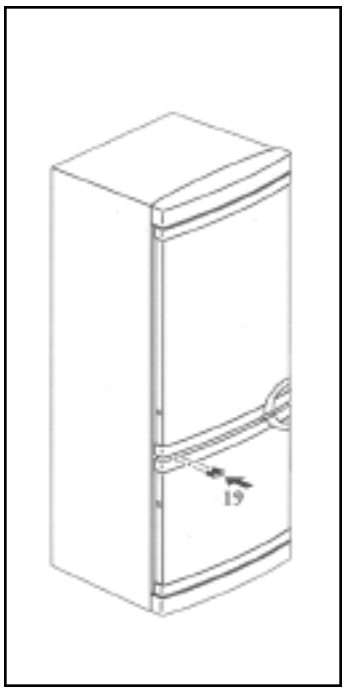

5

- How to mount handgrips.

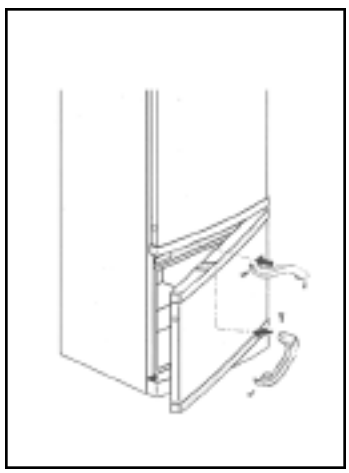

ERF-36.M..., ERF-38.M..., ERF-39.M..., ERF-41.M... (Hidden)

- How to reverse doors in 5 steps.(Hidden Handle).

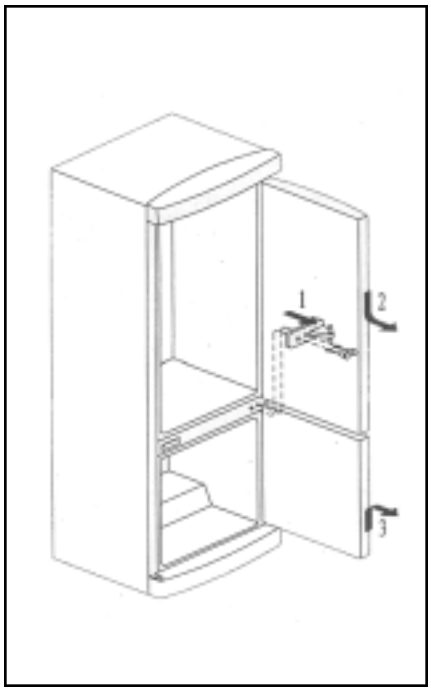

1

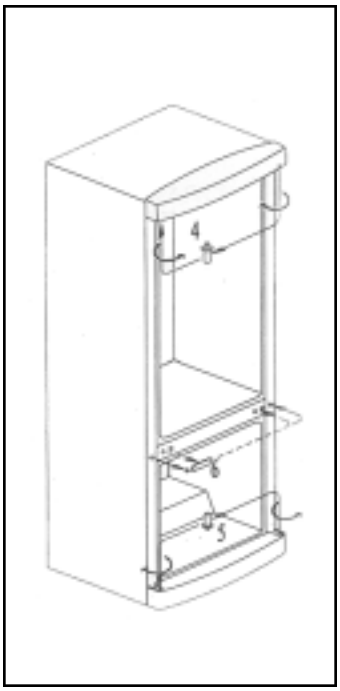

2

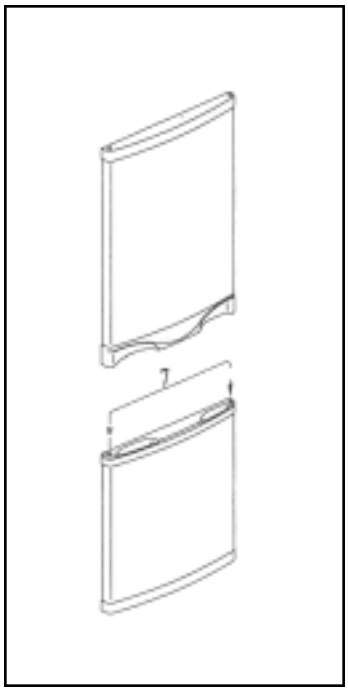

3

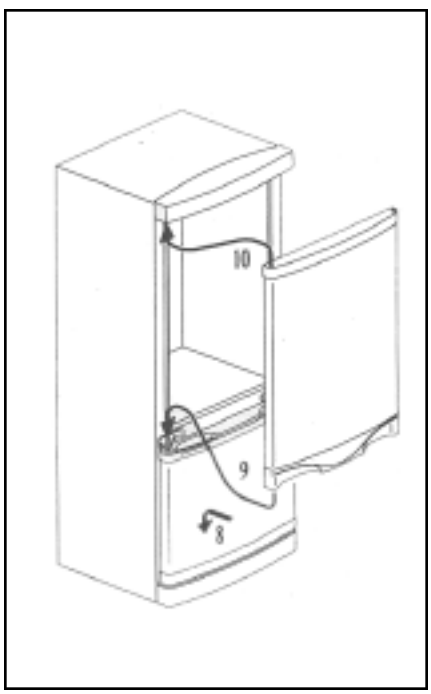

4

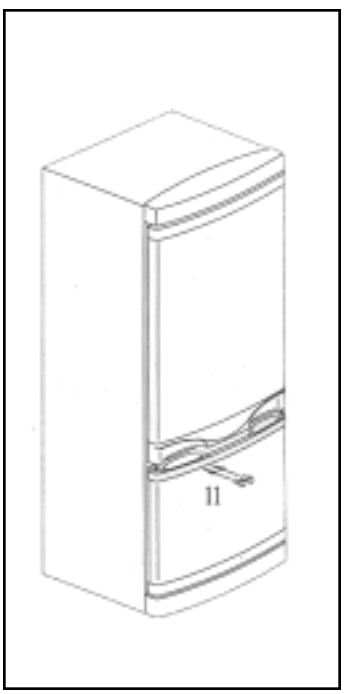

5

- How to mount handgrips.