EN

BUILT UNDER FREEZER

User manual

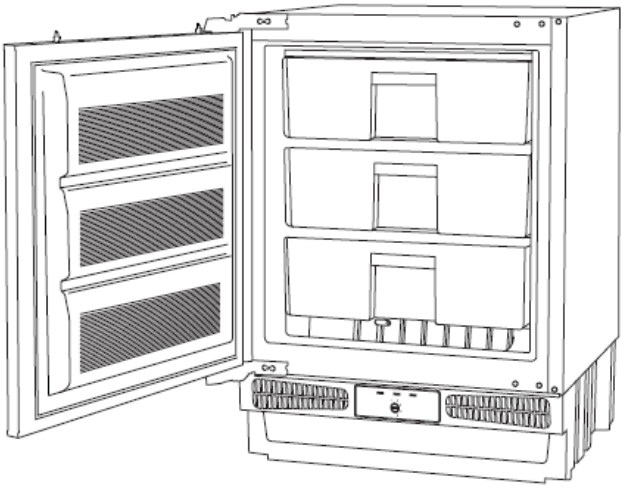

BU LZ609
444410786

Index

BEFORE USING THE APPLIANCE 2
General warnings 2
Old and out-of-order fridges 4
Safety warnings 4
Installing and operating your freezer 5
Before using your freezer 6

HOW TO OPERATE THE FREEZER 6
Thermostat setting 6

FOOD STORAGE IN THE APPLIANCE 6

CLEANING AND MAINTENANCE 8
Defrosting the freezer 9

BEFORE CALLING YOUR AFTER SALES SERVICE 10
Tips for saving energy 11

PARTS OF THE APPLIANCE AND THE COMPARTMENT 12
Installation instructions 13

PART 1. BEFORE USING THE APPLIANCE

General warnings

WARNING: Keep ventilation openings, in the appliance enclosure or in the built-in structure, clear of obstruction.

WARNING: Do not use mechanical devices or other means to accelerate the defrosting process, other than those recommended by the manufacturer.

WARNING: Do not use electrical appliances inside the food storage compartments of the appliance, unless they are of the type recommended by the manufacturer.

WARNING: Do not damage the refrigerant circuit.

WARNING: To avoid a hazard due to the instability of the appliance, it must be fixed in accordance with the instructions.

- If your appliance uses R600a as a refrigerant – you can learn this information from the label on the cooler- you should be careful during shipment and installation to prevent your appliance's cooler elements from being damaged. R600a is an environmentally friendly and natural gas. As it is explosive, in the event of a leak due to damage to the cooler elements, move your fridge from open flame or heat sources and ventilate the room where the appliance is located for a few minutes.
- Whilst carrying and positioning the fridge, do not damage the cooler gas circuit.
- Do not store explosive substances such as aerosol cans with a flammable propellant in this appliance.
- This appliance is intended to be used in household and similar applications such as;
  - staff kitchen areas in shops, offices and other working environments
  - farm houses and by clients in hotels, motels and other residential type environments

- bed and breakfast type environments;
- catering and similar non-retail applications

- If the socket does not match the refrigerator plug, it must be replaced by the manufacturer, its service agent or similarly qualified persons in order to avoid a hazard.
- This appliance is not intended for use by persons (including children) with reduced physical, sensory or mental capabilities, or lack of experience and knowledge, unless they have been given supervision or instruction concerning use of the appliance by a person responsible for their safety. Children should be supervised to ensure that they do not play with the appliance.
- A specially grounded plug has been connected to the power cable of your refrigerator. Insert the plug into a socket with an efficient ground connection. If the socket has no ground contact or the plug does not match, we suggest you to call an authorized electrician for assistance.
- This appliance can be used by children aged from 8 years and above and persons with reduced physical, sensory or mental capabilities or lack of experience and knowledge if they have been given supervision or instruction concerning use of the appliance in a safe way and understand the hazard involved. Children shall not play with the appliance. Cleaning and user maintenance, shall not be made by children without supervision.
- If the supply cord is damaged, it must be replaced by the manufacturer, its service agent or similar qualified persons in order to avoid a hazard.
- This appliance is not intended for use at altitudes exceeding 2000 m.

Old and out-of-order fridges

- If your old fridge has a lock, break or remove the lock before discarding it, because children may get trapped inside it.

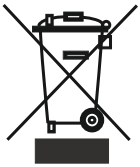

- Old fridges and freezers contain insulation material and refrigerant with CFC. Therefore, take care not to harm environment when you are discarding your old fridges.

  Please ask your local authority about the disposal of the WEEE for reuse, recycle and recovery purposes.

Notes:

- Please read the instruction manual carefully before installing and using your appliance. ***We are not responsible for damage incurred due to misuse.***
- Follow all instructions on your appliance and instruction manual, and keep this manual in a safe place to resolve the problems that may occur in the future.
- This appliance is produced to be used in homes and it can only be used in domestic environments and for the specified purposes. It is not suitable for commercial or common use. Such use will cause the guarantee of the appliance to be cancelled and our company will not be responsible for losses incurred.

Safety warnings

- Do not use multiple sockets or an extension cord.
- Do not plug in damaged, torn or old plugs.
- Do not pull, bend or damage the cord.





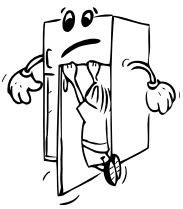

- This appliance is designed for use by adults, do not allow children to play with the appliance or let them hang off the door.
- Do not plug-in or pull out the plug from the socket with wet hands to prevent electrocution!
- Do not place glass bottles or beverage cans in the freezer. Bottles or cans may explode.



- Do not place explosive or flammable material in your freezer for your safety. Place drinks with higher alcohol amount vertically and by closing their necks tightly in the freezer.
- When taking ice made in the freezer, do not touch it, ice may cause ice burns and/or cuts.



- Do not touch frozen goods with wet hands! Do not eat ice-cream and ice cubes immediately after you have taken them out of the freezer!
- Do not re-freeze frozen goods after they have melted. This may cause health issues like food poisoning.



- Do not cover the body or top of freezer with lace. This affects the performance of your freezer.
- Fix the accessories in the freezer during transportation to prevent damage to accessories.

Installing and operating your freezer

Before starting to use your freezer, you should pay attention to the following points:

- Operating voltage for your freezer is 220-240 V at 50Hz.
- The plug must be accessible after installation.
- There can be an odour when you first switch on the appliance. It will disappear after the appliance starts to cool.
- Before making the connection to the power supply, ensure that the voltage on the nameplate corresponds to the voltage of electrical system in your home.
- Insert the plug into a socket with an efficient ground connection. If the socket has no ground contact or the plug does not match, we suggest you call an authorized electrician for assistance.
- The appliance must be connected with a properly installed fused socket. Power supply (AC) and voltage at the operating point must match with the details on the name plate of the appliance (name plate is located on the inside left of the appliance).
- We do not take responsibility for damages that occur due to ungrounded usage.
- Place your freezer in a place where it won't be exposed to direct sunlight.
- Your freezer should never be used outdoors or left under the rain.
- Your appliance should be at least 50 cm away from stoves, Gas ovens and heater cores, and should be at least 5 cm away from electrical ovens.
- When your freezer is placed next to a deep freezer, there should be at least 2 cm between them to prevent humidity on the outer surface.



- Do not place heavy items on the appliance.
- Clean the appliance thoroughly, especially in the interior, before use (See Cleaning and Maintenance).
- Installation procedure into the kitchen unit is given in the installation manual. This product is intended to be used in proper kitchen units only.
- The adjustable front legs should be adjusted to make sure your appliance is level and stable. You can adjust the legs by turning them clockwise (or in the opposite direction). This should be done before placing food in the fridge.
- Before using your freezer, wipe all parts back with warm water added with a tea spoonful of sodium bicarbonate, and then rinse with clean water and dry. Replace all parts after cleaning.
- Install the plastic distance guide (the part with black vanes at the rear) by turning it 90° as shown in the figure to prevent the condenser from touching the wall.

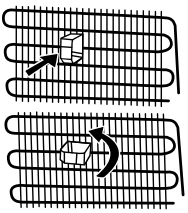

- The freezer should be placed against a wall with a free distance not exceeding 75 mm.

Before using your freezer



- When it is operated for the first time or after transportation, keep your freezer in the upright position for 3 hours before plugging it in to allow efficient operation. Otherwise, you may damage the compressor.
- Your freezer may have a smell when it is operated for the first time; the smell will fade away when your freezer starts to cool.

PART 2. HOW TO OPERATE THE FREEZER

Thermostat setting

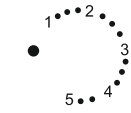

The freezer thermostat automatically regulates the inside temperature of the compartments. By rotating the knob from position 1 to 5, colder temperatures can be obtained. "●" position shows thermostat is closed and no cooling will be available.

Important note: Do not try to rotate knob beyond 1 position it will stop your appliance.

Freezer thermostat setting;

1 - 2 : For short-term storage of food in the freezer compartment, you can set the knob between minimum and medium position.

3 - 4 : For long-term storage of food in the freezer compartment, you can set knob to medium position.

5 : For freezing the fresh food. The appliance will run for colder temperatures.

Note; The ambient temperature, temperature of the freshly stored food and how often the door is opened, affects the temperature in the refrigerator and freezer compartments. If required, change the temperature setting.

PART 3. FOOD STORAGE IN THE APPLIANCE

- This freezer is used for freezing fresh foods and for storing frozen foods for the period of time indicated on packaging, and for making ice cubes.
- For freezing fresh food; wrap and seal fresh food properly, that is the packaging should be air tight and shouldn't leak. Special freezer bags, aluminum foil (heavy grade), polythene bags and plastic containers are ideal.

  While freezing food; The maximum amount of fresh food (in kg) that can be frozen in 24 hours is indicated on the appliance label.
- For optimum appliance performance to reach maximum freezing capacity , turn knob to 5 position when placing fresh food in the freezer.
- After placing fresh food in the freezer, 24 hours position 5 is generally sufficient, after 24 hours, reset the thermostat to the desired position.
- **Attention;** In order to save energy, when freezing small amounts of food, reset the thermostat to the desired position.(Recommendation).
- Do not allow the fresh food to be frozen to come into contact with the already frozen food.

- Always mark the date and the content on the pack and do not exceed the stated storage time.
- In case of a power failure or malfunction, the freezer compartment will maintain a sufficiently low temperature for food storage. However, avoid opening the freezer door to slow down the temperature rise within the freezer compartment.
- The maximum amount of fresh foods that can be loaded in the freezer within 24 hours is indicated on the name plate (see Freezing Capacity).
- Never place warm food in the freezer compartment.
- When purchasing and storing frozen food products; ensure that the packaging is not damaged.
- The storage time and the recommended temperature for storing frozen foods are indicated on the packaging. For storing and using, follow the manufacturer's instructions. If no information is provided, food should not be stored for more than 3 months.
- Place frozen food in the freezer compartment as soon as possible after buying it.
- Once the food is thawed, it must not be refrozen; you must cook it as quickly as possible in order to consume or to freeze once again.
- When making ice cubes, fill the ice tray with water and place in freezer compartment. After the water completely turned into ice, you can twist the tray as shown below to get the ice cube.

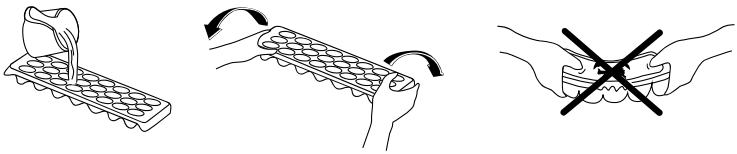

Storage: If you want to use the maximum net capacity, you can remove the drawers and store the items directly on the cooling tubes. This will enable you to make use of the entire volume of the compartment.

PART 4. CLEANING AND MAINTENANCE

- **Disconnect unit from the power supply before cleaning.**

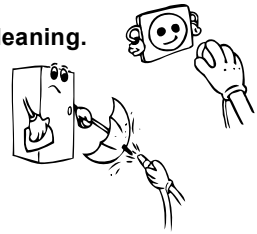

- Do not clean the appliance by pouring water on it.

- The freezer compartment should be cleaned periodically using a solution of bicarbonate of soda and lukewarm water.

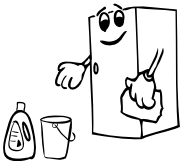

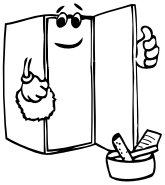

- Clean the accessories seperately with soap and water. Do not clean them in the washing machine.



- Do not use abrasive products, detergents or soaps. After washing, rinse with clean water and dry carefully. When the cleaning operations have been completed reconnect the plug of the unit with dry hands.

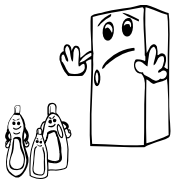

- You should clean the condenser with broom at least twice a year in order to provide energy saving and increase the productivity.

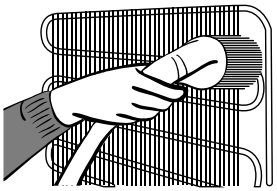

Defrosting the freezer

WARNING: Never use sharp metal tools, unless recommended by manufacturer, for this operation as they can damage the refrigeration circuit.

After a period of time, frost will build up in certain areas in the freezer. The frost, accumulated in the freezer, should be removed periodically (use the plastic scraper if available).

Complete defrosting will become necessary if the frost layer exceeds 3-5 mm to maintain the efficiency of the freezer.

- The day before you defrost, set the thermostat dial to position “5” to freeze the foods completely. (Recommendation)
- During defrosting, frozen foods should be wrapped in several layers of paper and kept in a cool place. The inevitable rise in temperature will shorten their storage life. Remember to use these foods within a relatively short period of time.
- Set the thermostat knob to position “•” and switch off the appliance.
- Leave the door open to accelerate defrosting. Remove the defrost water from the compartment.

If there is defrost water on the freezer floor, you can clear it away by using a sponge.

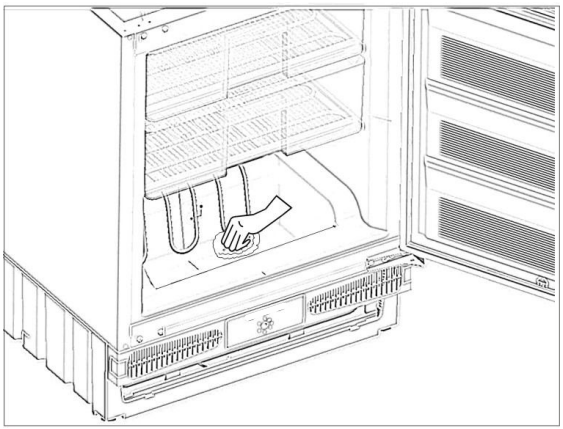

- Clean the interior by hand with lukewarm water and a little detergent.
  Never use abrasive products or aggressive cleaning agents.
- Dry the inside of the unit, plug on the mains, and set the thermostat knob to position “5”. After 24 hours, reset the thermostat to the desired position.

PART 5. BEFORE CALLING YOUR AFTER SALES SERVICE

If your freezer is not working properly, it may be a minor problem, therefore check the following.

The appliance does not operate,

Check if;

- There is a power failure,
- The mains plug is not properly plugged in, or is loose
- The thermostat setting is on position "•",
- The socket is defective. To check this, plug in another appliance that you know which is working into the same socket.

The appliance performs poorly;
Check if;

- You have overloaded the appliance,
- The doors are not closed perfectly,
- There are not enough ventilation ducts on the kitchen unit as mentioned in the Installation Manual.

If there is noise;

The cooling gas which circulates in the freezer circuit may make a slight noise (bubbling sound) even when the compressor is not running. Do not worry, this is quite normal. If these sounds are different check if;

- The appliance is installed firmly as described in the installation manual.
- The objects on the appliance are vibrating.

If your freezer is not cooling enough;

Your freezer is designed to operate in the ambient temperature intervals stated in the standards, according to the climate class stated in the information label. We do not recommend operating your freezer out of stated temperatures value limits in terms of cooling effectiveness.

Climate Class	Ambient Temperature (°C)
T	Between 16 and 43 (°C)
ST	Between 16 and 38 (°C)
N	Between 16 and 32 (°C)
SN	Between 10 and 32 (°C)

This appliance is designed for use at an ambient temperature within the 10°C - 32°C range.

IMPORTANT NOTES:

- When power is off, to prevent any compressor problem you should un-plug the freezer. You should delay plugging in 5 – 10 minutes after you power supply. If you un-plug the freezer for a reason you should wait at least 5 min to plug it back in. It is important for avoiding damage to freezer's components.
- If you won't be using your freezer for a long time (such as on summer holidays), please disconnect the plug from the socket. Clean your freezer as per Part 4 of this document and leave the door open to prevent any humidification or odour formation.
- If there is still a problem with your freezer although you have followed the instructions in this book, please consult your nearest authorized service center.

Tips for saving energy

1– Install the appliance in a cool, well ventilated room , but not in direct sunlight and not near heat source (radiator, cooker.. etc). Otherwise use an insulating plate.

2– Allow warm food and drinks to cool down outside the appliance.

3– When placing, drinks and left-overs they must be covered. Otherwise humidity increases in the appliance, therefore the working time gets longer. Also covering drinks and left-overs helps to save smell and taste.

4– When placing food and drinks, open the appliance door as briefly as possible.

5– Keep the covers closed of any different temperature compartment in the appliance (crisper, chiller ...etc).

6– The door gasket must be clean and pliable. Replace gaskets if worn.

PART 6.

PARTS OF THE APPLIANCE AND THE COMPARTMENT



This presentation is only for information about the parts of the appliance.
Parts may vary according to the appliance model.

1) FREEZER DRAWERS
2) THERMOSTAT DIAL

Installation instructions

Installation Kit Contents

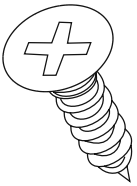

1. Wood screw x17

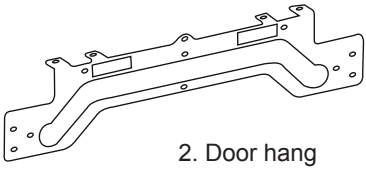

2. Door hang

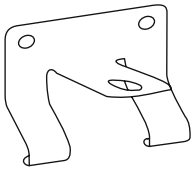

3. Door Bottom Fixings x2

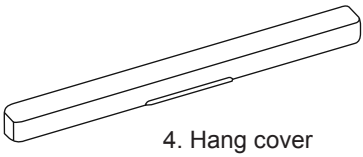

4. Hang cover

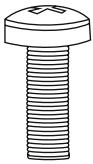

5. Screw



6. Top bracket

Tools Required

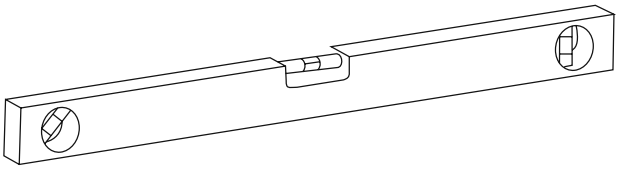

7. Spirit level

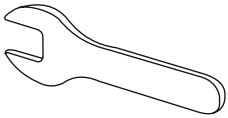

8. Wrench

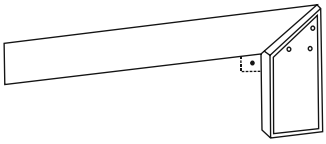

9. Setsquare

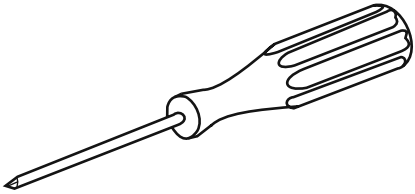

10. Screwdriver

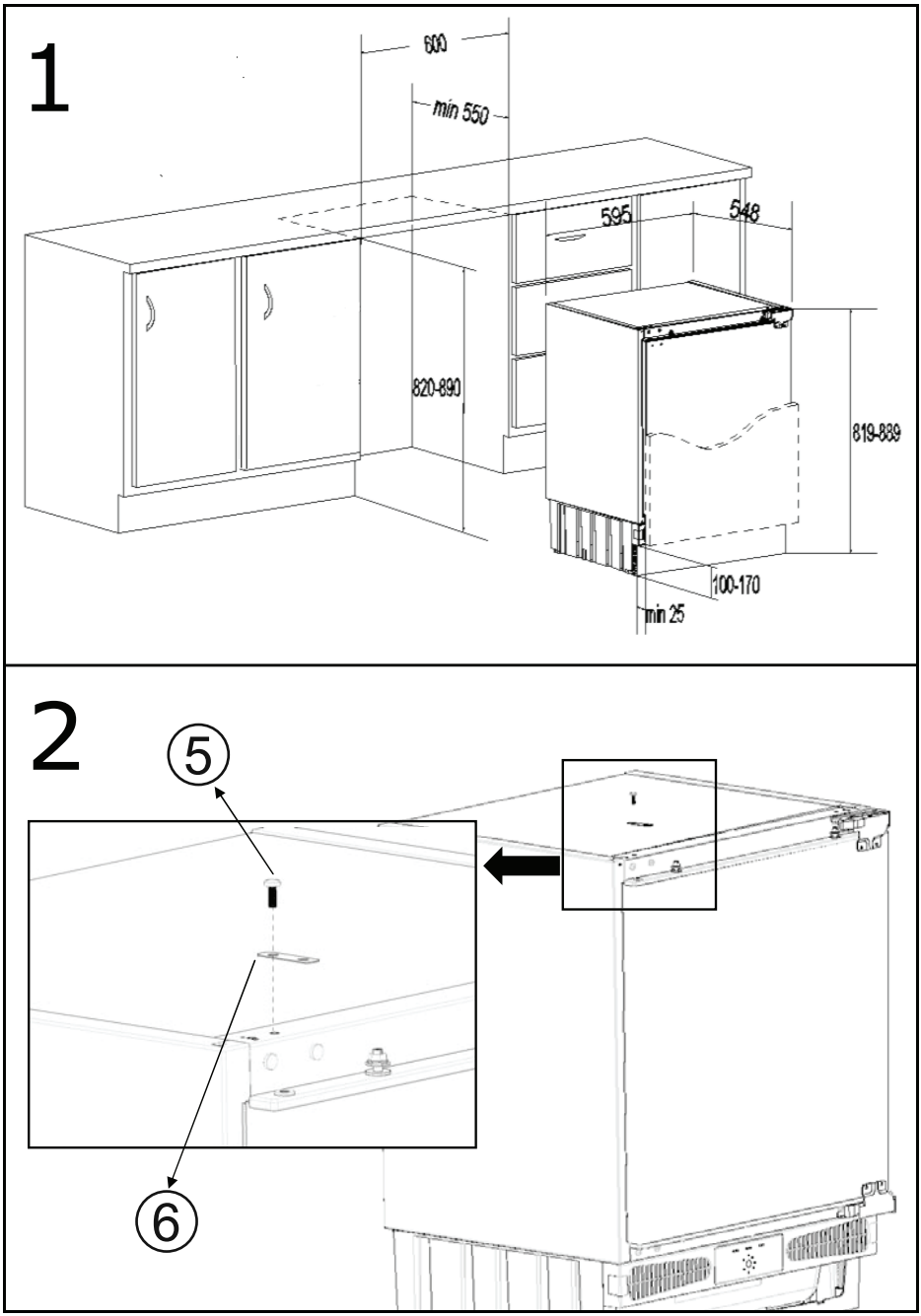
1
600
min 550
595
548
820-890
819-889
100-170
min 25
2
5
6

3

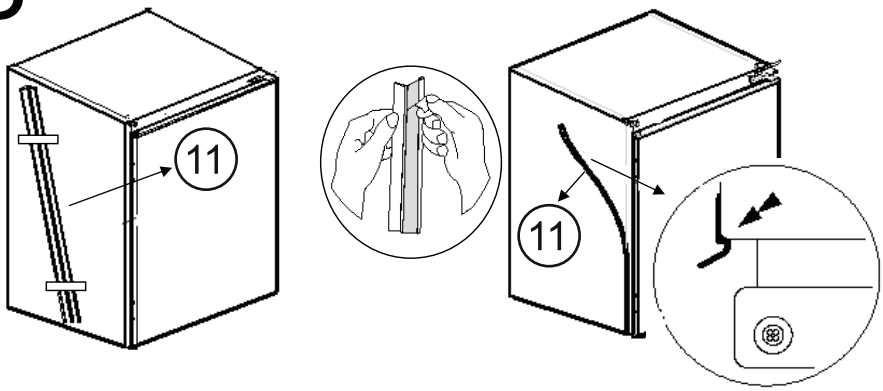

4

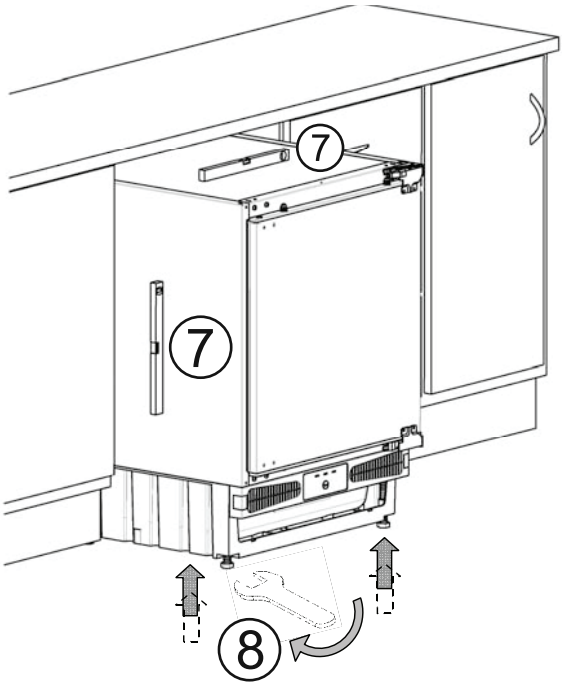

5

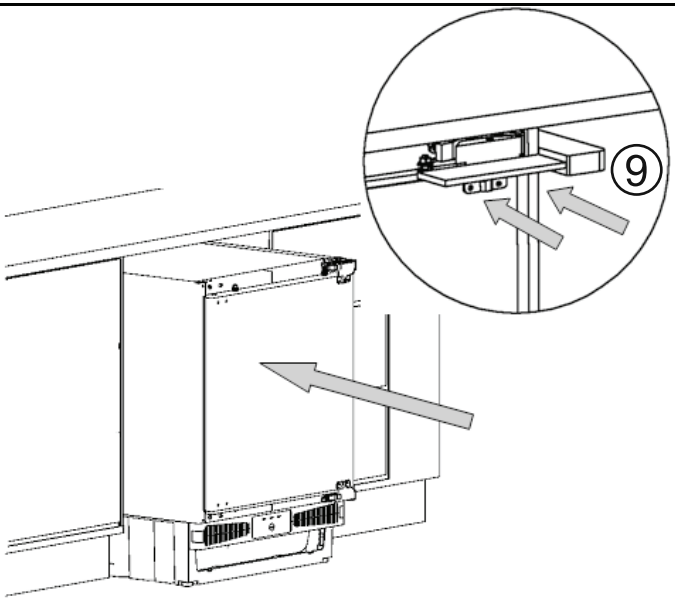

6

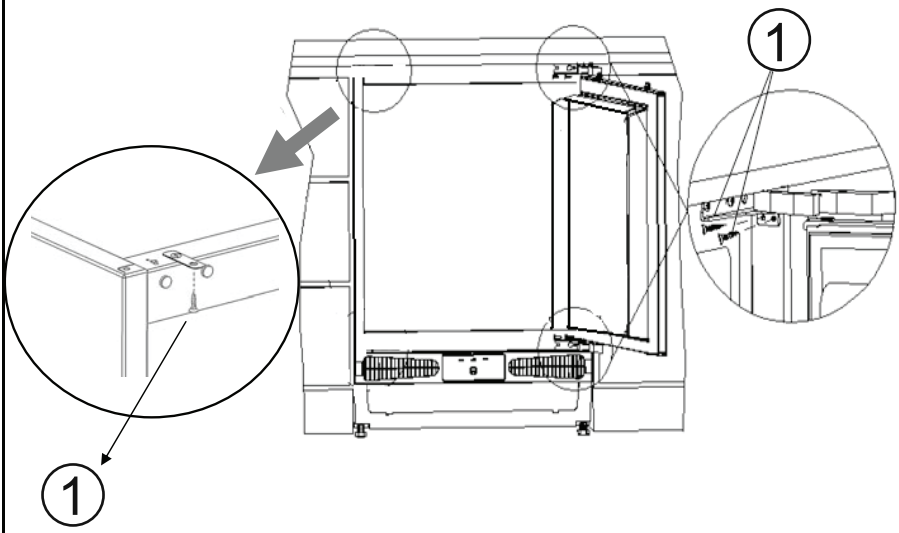

7

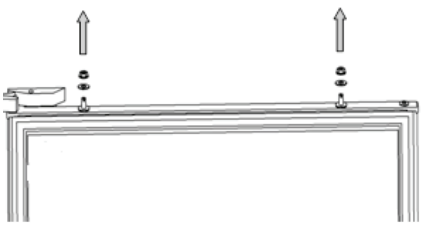

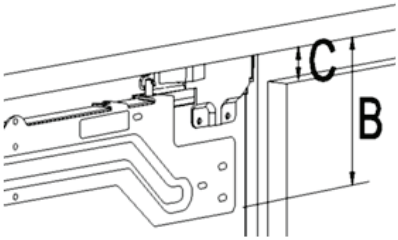

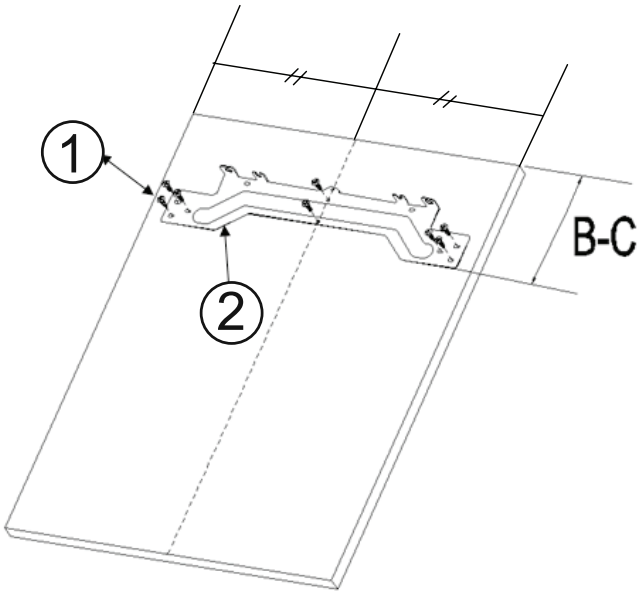

8

9

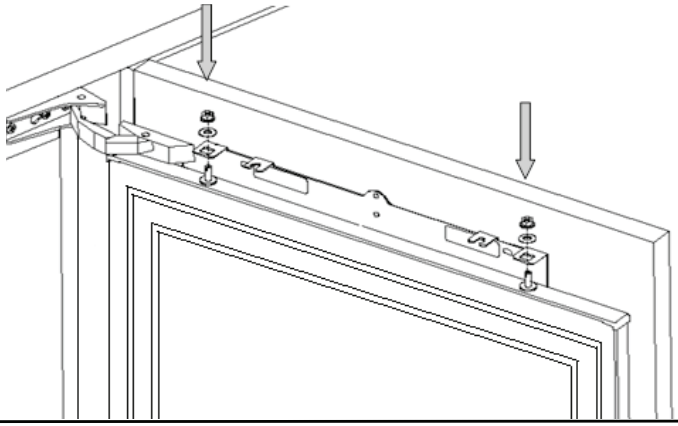

10

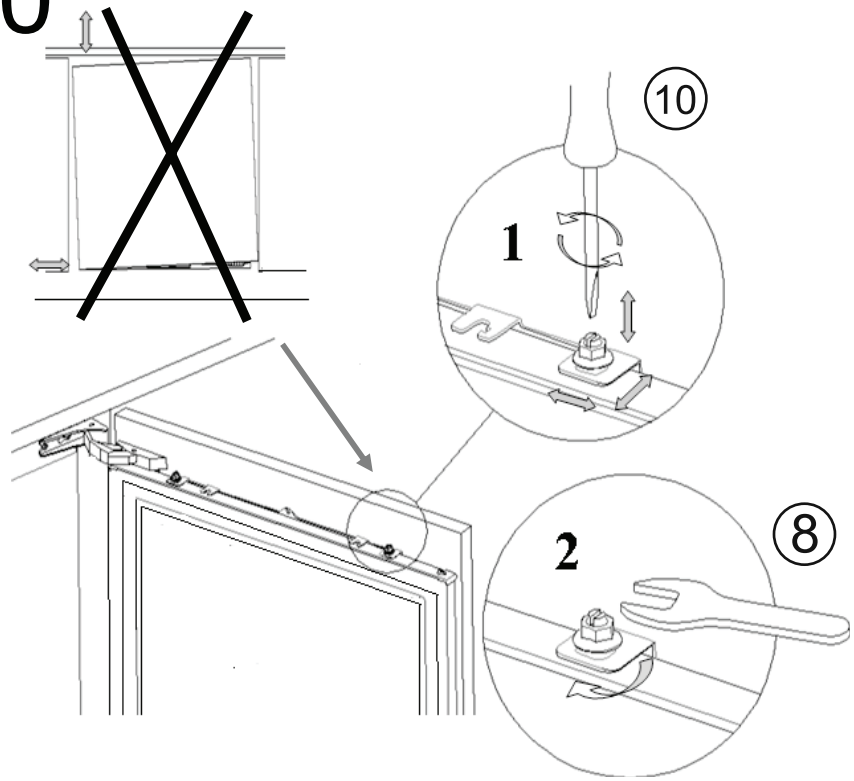

11

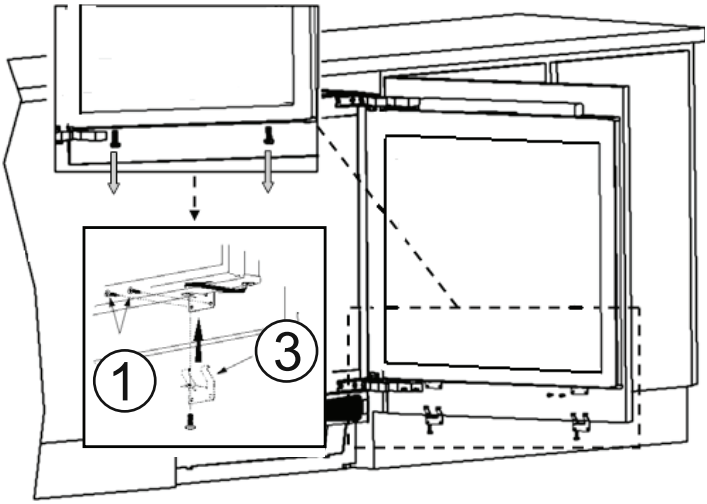

12

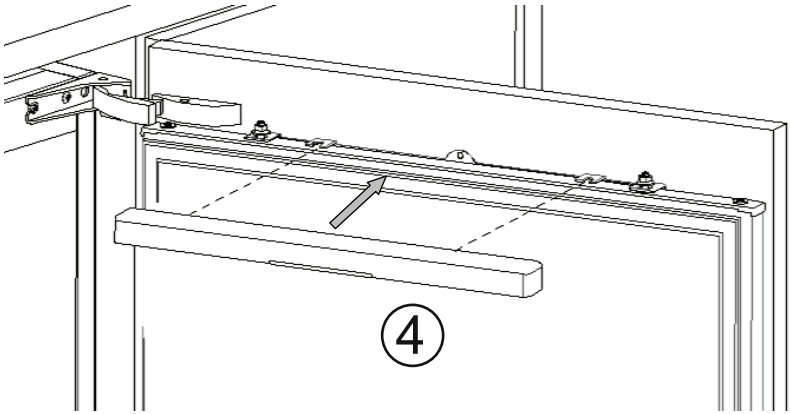

13

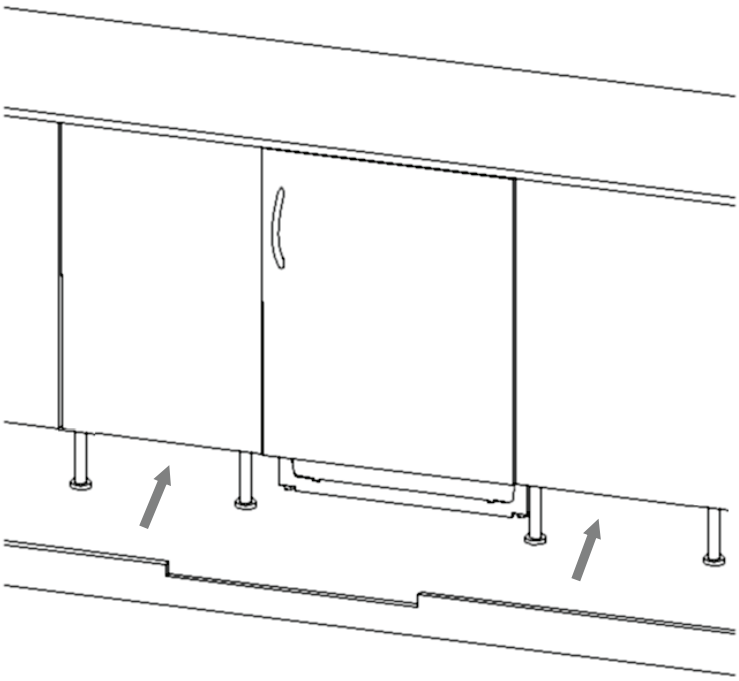

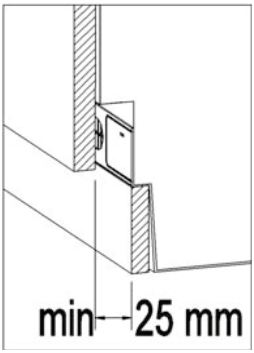

Reversing the door

a: Unscrew the screws on the front surface of the appliance door. Take the appliance door to a safe place.
b: Move the hole plugs on the appliance door's front surface, to the holes on the reverse side.
c: Open the door upper hinge and door lower hinge, disassemble them.
d: Move the hole plugs to opposite side.
e: Assemble the door upper hinge and door lower hinge to the opposite corners of their original position.
f: Assemble the appliance door.

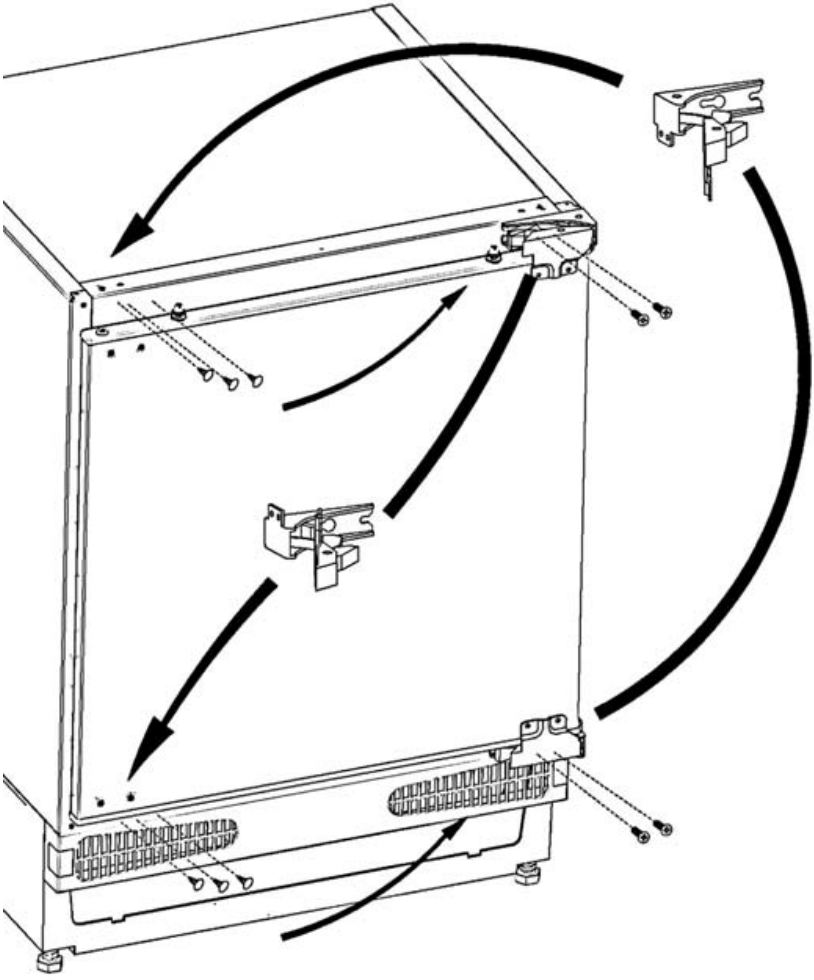

EN	PRODUCT FICHE	
1	Brand	BELLING
2	Model	BEL BU FZ609
3	Product category	8 (Freezer)
4	Energy class	A+
5	Annual energy consumption*	177 kWh
6	Total gross volume	107 l
7	Total net volume	93 l
8	Refrigerator gross volume	- l
9	Refrigerator net volume	- l
10	Chiller compartment net volume	- l
11	Freezer gross volume	107 l
12	Freezer net volume	93 l
13	Star rating	****
14	Refrigeration system	STATIC
15	Temperature rise time (-18°C/-9°C)	18 Hours
16	Freezing capacity	9 kg / 24 h
17	Climate class **	SN (10°C - 32°C)
18	Noise emission	41 dB(A)
*	Energy consumption of 177 kWh kWh per year, calculated on the basis of results obtained in 24 hours under normalised test conditions. Real energy consumption depends on the conditions in which the equipment is used as well as where it is placed.	
**	This appliance is designed for use at an ambient temperature within the 10°C - 32°C range.	

Belling Customer Care

Please keep this handbook in a safe place as the information inside may be of use should you sell, or pass on the appliance. Please fill in the model number and serial number in the spaces provided below as they will assist us should you need to call.

0344 8153746

When you dial this number, you will hear a recorded message and be given several options. This indicates that your call has been accepted and is being held in a queue. calls are answered in strict rotation as our Customer care representatives become available.

Enter the appliance numbers here for future reference:

Model No

4	4	4						

Serial No

These numbers can be found on your appliances data badge. Outside the UK and Northern Ireland, refer to your local supplier.

CE

52243601