NRE6ME39U
LRT5ME38W2

NRE6ME39W
LRT5ME38U2

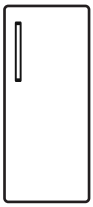

EN Fridge

User Manual

Electrolux

		
EN	**FIRE**	**Warning;** Risk of fire / flammable materials

CONTENTS

BEFORE USING THE APPLIANCE 4
General warnings 4
Old and out-of-order fridges or freezer 8
Safety warnings 8
Installing and operating your fridge 9
Before Using your Fridge 10
Dimensions 11
THE VARIOUS FUNCTION AND POSSIBILITIES 12
Information on No-Frost technology 12
Display and Control Panel 12
Operating your Fridge 12
Fridge Temperature Set Button 12
Alarm symbol (Alarm LED) 13
Super Cooling Mode 13
Fridge Temperature Settings 13
Temperature Settings Warnings 13
Accessories 14
Extra Chill Drawer 14
Extra Chill Drawer 14
CustomFlex 15
The Fresh Dial 15
ARRANGING FOOD IN THE APPLIANCE 16
CLEANING AND MAINTENANCE 17
TRANSPORTATION AND CHANGING OF INSTALLATION POSITION 18
Repositioning the Door 18
BEFORE CALLING YOUR AFTER SALES SERVICE 18
Hints for Energy Saving 20
DESCRIPTION OF THE APPLIANCE 21
TECHNICAL DATA 22
INFORMATION FOR TEST INSTITUTES 22

WE'RE THINKING OF YOU

Thank you for purchasing an Electrolux appliance. You've chosen a product that brings with it decades of professional experience and innovation. Ingenious and stylish, it has been designed with you in mind. So whenever you use it, you can be safe in the knowledge that you'll get great results every time.

Welcome to Electrolux.

Visit our website to:



Get usage advice, brochures, trouble shooter, service and repair information:
www.electrolux.com/support



Register your product for better service:
www.registerelectrolux.com



Buy Accessories, Consumables and Original spare parts for your appliance:
www.electrolux.com/shop

CUSTOMER CARE AND SERVICE

Always use original spare parts.

When contacting our Authorised Service Centre, ensure that you have the following data available: Model, PNC, Serial Number.

The information can be found on the rating plate.

⚠ Warning / Caution-Safety information

ⓘ General information and tips

Environmental information

Subject to change without notice.

PART - 1. BEFORE USING THE APPLIANCE

General warnings

Please read the instruction manual carefully before installing and using your appliance. We are not responsible for the damage occurred due to misuse.

Follow all instructions on your appliance and instruction manual, and keep this manual in a safe place to resolve the problems that may occur in the future.

This appliance is not intended to be used as a built-in appliance.

In case of different installation from freestanding respecting space required in use dimensions, the appliance will function correctly but energy consumption migh increase slightly.

⚠ **WARNING:** Keep ventilation openings, in the appliance enclosure or in the built-in structure, clear of obstruction.

⚠ **WARNING:** Do not use mechanical devices or other means to accelerate the defrosting process, other than those recommended by the manufacturer.

⚠ **WARNING:** Do not use electrical appliances inside the food storage compartments of the appliance, unless they are of the type recommended by the manufacturer.

⚠ **WARNING:** Do not damage the refrigerant circuit.

⚠ **WARNING:** When positioning the appliance, ensure the supply cord is not trapped or damaged.

⚠ **WARNING:** Do not locate multiple portable socket-outlets or portable power supplies at the rear of the appliance.

⚠ **WARNING:** In order to avoid any hazards resulting from the instability of the appliance, it must be fixed in accordance with the following instructions:

⚠ If your appliance uses R600a as a refrigerant (this information will be provided on the label of the cooler) you should take care during transportation and installation to prevent the cooler

elements from being damaged. R600a is an environmentally friendly and natural gas, but it is explosive. In the event of a leak due to damage of the cooler elements, move your fridge away from open flames or heat sources and ventilate the room where the appliance is located for a few minutes.

- Keep all packaging away from children and dispose of it appropriately.
- While carrying and positioning the fridge, do not damage the cooler gas circuit.
- Do not store explosive substances such as aerosol cans with a flammable propellant in this appliance.

General Safety

- This appliance is for storing food and beverages only.
- This appliance is designed for single household domestic use in an indoor environment.
- This appliance may be used in offices, hotel guest rooms, bed & breakfast guest rooms, farm guest houses and other similar accommodation where such use does not exceed (average) domestic usage levels.
- If the socket does not match the refrigerator plug, it must be replaced by the manufacturer, a service agent or similarly qualified persons in order to avoid a hazard.
- A specially grounded plug has been connected to the power cable of your refrigerator. This plug should be used with a specially grounded socket of 16 amperes or 10 amperes according to country where the product will be sold. If there is no such socket in your house, please have it installed by an authorized electrician.
- This appliance can be used by children aged from 8 years and above and persons with reduced physical, sensory or mental capabilities or lack of experience and knowledge if they have been given supervision or instruction concerning

use of the appliance in a safe way and understand the hazards involved. Children shall not play with the appliance. Cleaning and user maintenance shall not be made by children without supervision.

- Children aged from 3 to 8 years are allowed to load and unload refrigerating appliances. Children are not expected to perform cleaning or user maintenance of the appliance, very young children (0-3 years old) are not expected to use appliances, young children (3-8 years old) are not expected to use appliances safely unless continuous supervision is given, older children (8-14 years old) and vulnerable people can use appliances safely after they have been given appropriate supervision or instruction concerning use of the appliance. Very vulnerable people are not expected to use appliances safely unless continuous supervision is given.
- If the supply cord is damaged, it must be replaced by the manufacturer, an authorised service agent or similar qualified persons, in order to avoid a hazard.
- This appliance is not intended for use at altitudes exceeding 2000 m.

To avoid contamination of food, please respect the following instructions:

- Opening the door for long periods can cause a significant increase of the temperature in the compartments of the appliance.
- Clean regularly surfaces that can come in contact with food and accessible drainage systems
- Store raw meat and fish in suitable containers in the refrigerator, so that it is not in contact with or drip onto other food.
- Two-star frozen-food compartments are suitable for storing pre-frozen food, storing or making ice cream and making ice cubes.

- One-, two- and three-star compartments are not suitable for the freezing of fresh food.
- If the refrigerating appliance is left empty for long periods, switch off, defrost, clean, dry, and leave the door open to prevent mould developing within the appliance.

Service

- To repair the appliance contact the Authorised Service Centre. Use original spare parts only.
- Please note that self-repair or nonprofessional repair can have safety consequences and might void the guarantee.
- The following spare parts will be available for 7 years after the model has been discontinued: thermostats, temperature sensors, printed circuit boards, light sources, door handles, door hinges, trays and baskets.
- Please note that some of these spare parts are only available to professional repairers, and that not all spare parts are relevant for all models.
- Door gaskets will be available for 10 years after the model has been discontinued.

Old and out-of-order fridges or freezer

- If your old fridge or freezer has a lock, break or remove the lock before discarding it, because children may get trapped inside it and may cause an accident.
- Old fridges and freezers contain isolation material and refrigerant with CFC. Therefore, take care not to harm environment when you are discarding your old fridges.

Disposal of your old appliance



The symbol on the product or on its packaging indicates that this product may not be treated as household waste. Instead it shall be handed over to the applicable collection point for the recycling of electrical and electronic equipment. By ensuring this product is disposed of correctly, you will help prevent potential negative consequences for the environment and human health, which could otherwise be caused by inappropriate waste handling of this product. For more detailed information about recycling of this product, please contact your local city office, your household waste disposal service or the shop where you purchased the product.

Notes:

- This appliance is produced to be used in homes and it can only be used in domestic environments and for the specified purposes. It is not suitable for commercial or common use. Such use will cause the guarantee of the appliance to be cancelled and our company will not be responsible for the losses to be occurred.
- This appliance is produced to be used in houses and it is only suitable for cooling / storing foods. It is not suitable for commercial or common use and/or for storing substances except for food. Our company is not responsible for the losses to be occurred in the contrary case.

Safety warnings

- Do not connect your fridge to the mains electricity supply using an extension lead.
- Do not use damaged, torn or old plugs.
- Do not pull, bend or damage the cord.







- Do not use plug adapter.
- This appliance is designed for use by adults. Do not allow children to play with the appliance or hang off the door.
- Never touch the power cord/plug with wet hands. This may cause a short circuit or electric shock.
- Do not place explosive or flammable material in your fridge. Place drinks with high alcohol content vertically in the fridge compartment and make sure their tops are tightly closed.





When the door of the fridge is closed, a vacuum seal will form. Wait for 1 minute before reopening it.

This application is optional for easy opening of the door. With this application, a little condensation may occur around this area and you may remove it.

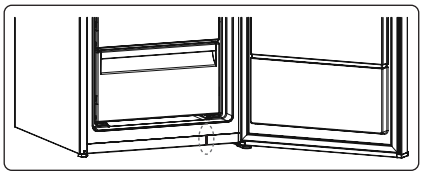

Installing and operating your fridge

Before using your fridge for the first time, please pay attention to the following points:

- The operating voltage for your fridge is 220-240 V at 50Hz.
- The plug must be accessible after installation.
- Your fridge may have an odour when it is operated for the first time. This is normal and the odour will fade when your fridge starts to cool.
- Before connecting your fridge, ensure that the information on the data plate (voltage and connected load) matches that of the mains electricity supply. If in doubt, consult a qualified electrician.
- Insert the plug into a socket with an efficient ground connection. If the socket has no ground contact or the plug does not match, we recommend you consult a qualified electrician for assistance.
- The appliance must be connected with a properly installed fused socket. The power supply (AC) and voltage at the operating point must match with the details on the name plate of the appliance (the name plate is located on the inside left of the appliance).
- We do not accept responsibility for any damages that occur due to ungrounded usage.
- Place your fridge where it will not be exposed to direct sunlight.
- Your fridge must never be used outdoors or exposed to rain.
- Your appliance must be at least 50 cm away from stoves, gas ovens and heater cores, and at least 5 cm away from electrical ovens.
- Do not cover the body or top of fridge with lace. This will affect the performance of your fridge.



- Top clearance required for the appliance can be derived from dimensions provided in chapter Dimensions.
- Do not place heavy items on the appliance.
- Use the adjustable front legs to make sure your appliance is level and stable. You can adjust the legs by turning them in either direction. This must be done before placing food in the appliance.
- Clean the appliance thoroughly before use (see Cleaning and Maintenance).
- Before using your fridge, wipe all parts with a solution of warm water and a teaspoon of sodium bicarbonate. Then, rinse with clean water and dry. Return all parts to the fridge after cleaning.

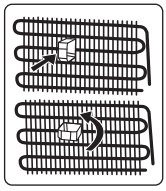

- Install the two plastic distance guides (the parts on the black vanes -condenser- at the rear) by turning it 90° (as shown in the figure) to prevent the condenser from touching the wall.
- If you position the appliance against a wall in a freestanding installation, install the rear spacers in order to guarantee the maximum possible distance

- For Side by Side niche installation please refer to the Joining Kit provided with the cabinet freezer and its installation manual (NOTE: joining kit is also available separately as accessory)

Before Using your Fridge



- When using your fridge for the first time, or after transportation, keep it in an upright position for at least 3 hours before plugging into the mains. This allows efficient operation and prevents damage to the compressor.
- Your fridge may have a smell when it is operated for the first time. This is normal and the smell will fade away when your fridge starts to cool.

Internal lighting

⚠ WARNING!
Risk of electric shock.

- Concerning the lamp(s) inside this product and spare part lamps sold separately: These lamps are intended to withstand extreme physical conditions in household appliances, such as temperature, vibration, humidity, or are intended to signal information about the operational status of the appliance. They are not intended to be used in other applications and are not suitable for household room illumination.

Dimensions

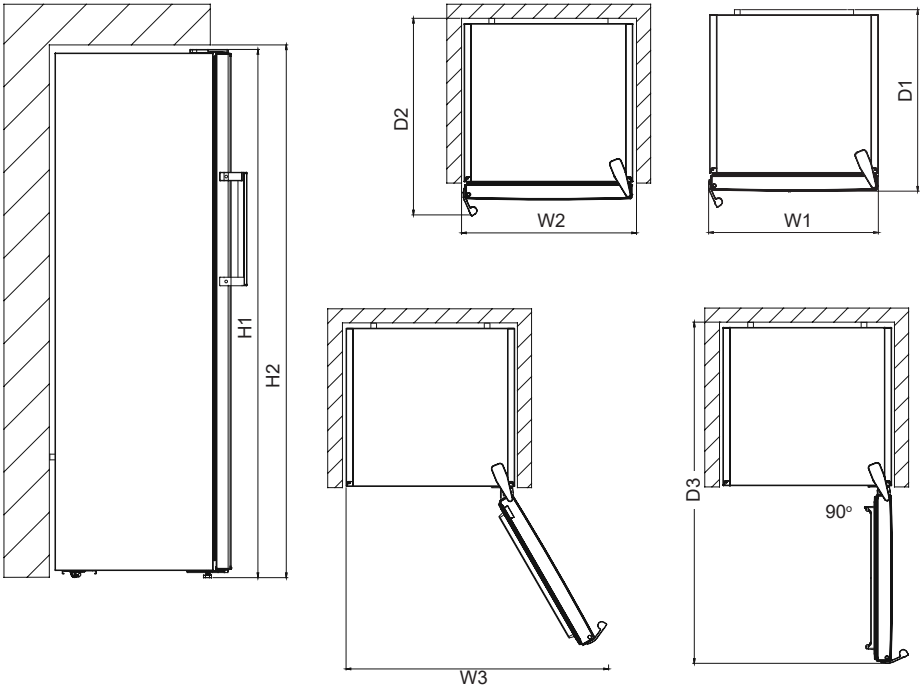

Overall dimensions [1]		
H1*	mm	1860
W1	mm	595
D1	mm	650

[1] the height, width and depth of the appliance without the handle

* including the height of the top hinge (10 mm)

Space required in use [2]		
H2	mm	1900
W2	mm	600
D2	mm	718

[2] the height, width and depth of the appliance including the handle, plus the space necessary for free circulation of the cooling air

Overall space required in use [3]		
W3	mm	917
D3	mm	1158

[3] the height, width and depth of the appliance including the handle, plus the space necessary for free circulation of the cooling air, plus the space necessary to allow door opening to the minimum angle permitting removal of all internal equipment

PART - 2. THE VARIOUS FUNCTION AND POSSIBILITIES

Information on No-Frost technology

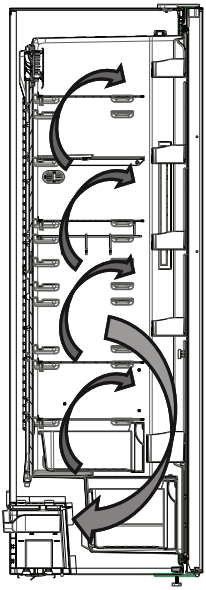

No-frost refrigerators differ from other static refrigerators in their operating principle.

In normal refrigerators the humidity entering the refrigerators due to opening the door and the humidity inherent in the food causes freezing in the backside of air duct. To defrost the frost and ice in the backside of air duct, you are periodically required to turn off the refrigerator, place the food that needs to be kept cooled in a separately cooled. The situation is completely different in no-frost refrigerators. Dry and cold air is blown into the refrigerator compartment homogeneously and evenly from several points via a blower fan. Cold air dispersed homogeneously and evenly between the shelves cools all of your food equally and uniformly, thus preventing humidity and freezing. Therefore your no-frost refrigerators allows you ease of use, in addition to its huge capacity and stylish appearance.

Display and Control Panel

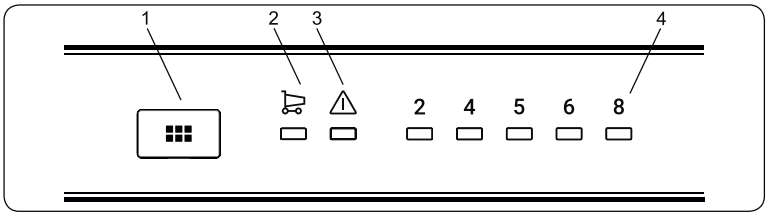

Using the Control Panel

1. Fridge temperature set button
2. Super cooling symbol (Super cooling LED)
3. Alarm symbol (Alarm LED)
4. Fridge adjusted temperature indicator

Operating your Fridge

Lighting (If available)

When the product is plugged in for the first time, the interior lights may turn on 1 minute late due to opening tests.

Fridge Temperature Set Button

This button allows setting temperature of the fridge. In order to set values for fridge partition, press this button. Use this button also to activate super cooling mode.

Alarm symbol (Alarm LED)

In case of a problem within the fridge, the alarm led will release red light.

Super Cooling Mode

When would it be used?

- To cooling huge quantities of food.
- To cooling fast food.
- To cooling food quickly.
- To store seasonal food for a long time.

How to use?

- Press temperature set button until super cooling light comes on.
- Super cooling led will light during this mode.
- For optimal appliance performance in maximum cooling capacity, set the appliance to active super cooling mode 6 hours before you put the fresh food into the fridge.

During this mode:

If you press temperature set button, the mode will be cancelled and the setting will be restored from 2.

The super cooling mode will be cancel automatically after 6 hours or when cooling sensor temperature falls below 2 °C.

Fridge Temperature Settings

- The initial temperature of the setting display is 5 °C.
- Press fridge setting button once.
- Every time you press the button, the setting temperature will increase. (2 °C, 4 °C, 5 °C, 6 °C, 8 °C, Super cooling)
- If you press fridge setting button until super cooling symbol is displayed on your fridge.
- Settings display and you do not press any button within the following 3 seconds.
- Super cooling will blink.
- If you keep on pressing, it will restart from last value.

Recommended Temperature Values for Cooler

When to adjust	Inner Temperature (°C)
For cooling the fridge at minimum capacity	8
In normal usage	4
For cooling the fridge at maximum capacity	2

Temperature Settings Warnings

- It is not recommended that you operate your fridge in environments colder than 10°C in terms of its efficiency.
- Do not start another adjustment before completing one adjustment.
- Temperature adjustments should be made according to the frequency of door openings and the quantity of food kept inside the fridge.

- When you first switch on the appliance, allow it to operate for 24 hours in order to reach normal operating temperature. During this time, do not open the door or place a lot of food inside the appliance.
- If the appliance is switched off or unplugged, wait at least 5 minutes before plugging the appliance in or restarting it in order to prevent damage to the compressor.
- Your fridge is designed to operate within specific ambient temperature ranges, according to the climate class stated on the information label. We do not recommend operating your fridge outside the stated temperatures value limits.
- Your appliance is designed to operate in the ambient temperature (T/SN = 10°C - 43°C) intervals stated in the standards, according to the climate class displayed on the information label. We do not recommend operating your appliance out of the stated temperature limits in terms of cooling effectiveness.

Climate class	Meaning	Ambient Temperature
T	Tropical	This refrigerating appliance is intended to be used at ambient temperatures ranging from 16 °C to 43 °C.
ST	Subtropical	This refrigerating appliance is intended to be used at ambient temperatures ranging from 16 °C to 38 °C.
N	Temperate	This refrigerating appliance is intended to be used at ambient temperatures ranging from 16 °C to 32 °C.
SN	Extended temperate	This refrigerating appliance is intended to be used at ambient temperatures ranging from 10 °C to 32 °C.

The Turbo Fan (if available)

Do not block the air inlet and outlet openings when storing food, otherwise air circulation provided by the turbo fan will be impaired.

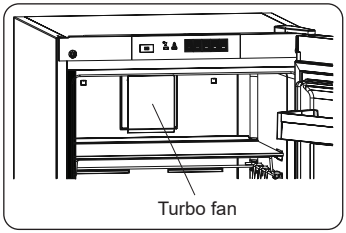

Accessories

Extra Chill Drawer (In some models)

Ideal to preserve the taste and texture of fresh cuts and cheese. The pull out drawer assures an environment with a lower temperature compared to the rest of the fridge, thanks to the active circulation of cold air.

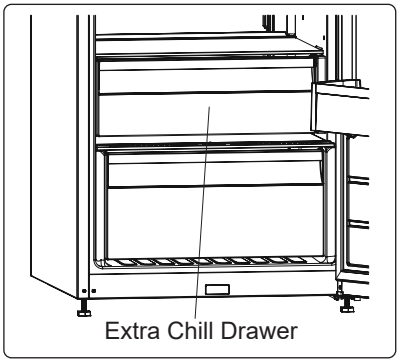

CustomFlex (In some models)

CustomFlex® offers you the freedom to customize the space in your refrigerator. Inside of the door there are a storage container and mobile containers, so you can tailor the space to your needs. The containers are even removable, so you can remove them from the refrigerator for easy access.

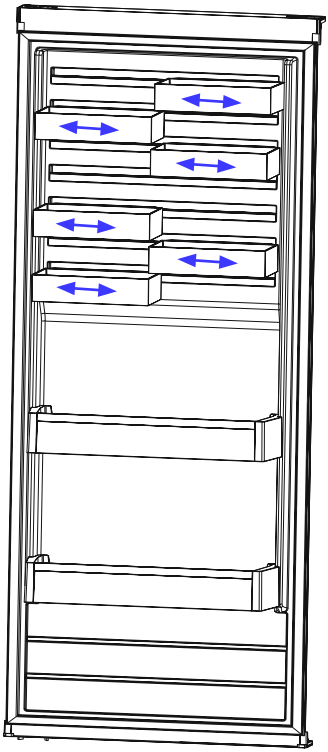

The Fresh Dial (In some models)

If the crisper is full, the fresh dial located in front of the crisper should be opened. This allows the air in the crisper and the humidity rate to be controlled, to increase the life of food within.

The dial, located behind the shelf, must be opened if any condensation is seen on the glass shelf.

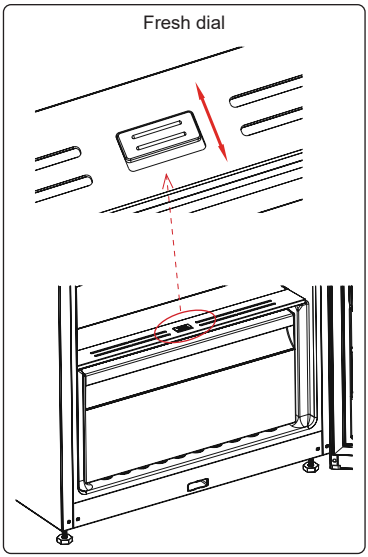

Visual and text descriptions in the accessories section may vary according to the model of your appliance.

PART - 3. ARRANGING FOOD IN THE APPLIANCE

- Fresh food compartment is the one marked (on the rating plate) with .
- To reduce humidity and avoid the consequent formation of frost, always store liquids in sealed containers in the refrigerator. Frost tends to concentrate in the coldest parts of the evaporating liquid and, in time, your appliance will require more frequent defrosting.
- Never place warm food in the refrigerator. Warm food should be allowed to cool at room temperature and should be arranged to ensure adequate air circulation in the refrigerator compartment.
- Make sure no items are in direct contact with the rear wall of the appliance as frost will develop and packaging will stick to it. Do not open the refrigerator door frequently.
- We recommend that meat and clean fish are loosely wrapped and stored on the glass shelf just above the vegetable bin where the air is cooler, as this provides the best storage conditions.
- Store loose fruit and vegetable items in the crisper containers.
- Store loose fruit and vegetables in the crisper.
- Storing fruit and vegetables separately helps prevent ethylene-sensitive vegetables (green leaves, broccoli, carrot, etc.) being affected by ethylene-releaser fruits (banana, peach, apricot, fig etc.).
- Do not put wet vegetables into the refrigerator.
- Storage time for all food products depends on the initial quality of the food and an uninterrupted refrigeration cycle before refrigerator storage.
- To avoid cross-contamination do not store meat products with fruit and vegetables. Water leaking from meat may contaminate other products in the refrigerator. You should package meat products and clean any leakages on the shelves.
- Do not put food in front of the air flow passage.
- Consume packaged foods before the recommended expiry date.

NOTE: Most efficient use of energy is ensured in the configuration with the drawers in the bottom part of the appliance, and shelves evenly distributed, position of door bins does not affect energy consumption.

NOTE: Potatoes, onions and garlic should not be stored in the refrigerator.

The table below is a quick guide to show you the most efficient way to store the major food groups in your refrigerator compartment.

Food	Maximum storage time	How and where to store
Vegetables and fruits	1 week	Vegetable bin
Meat and fish	2 - 3 Days	Wrap in plastic foil, bags, or in a meat container and store on the glass shelf
Fresh cheese	3 - 4 Days	On the designated door shelf
Butter and margarine	1 week	On the designated door shelf
Bottled products e.g. milk and yoghurt	Until the expiry date recommended by the producer	On the designated door shelf
Eggs	1 month	On the designated egg shelf
Cooked food	2 Days	All shelves

PART - 4. CLEANING AND MAINTENANCE

Disconnect the unit from the power supply before cleaning.



Do not wash your appliance by pouring water on it.



Do not use abrasive products, detergents or soaps for cleaning the appliance. After washing, rinse with clean water and dry carefully. When you have finished cleaning, reconnect the plug to the mains supply with dry hands.



- Make sure that no water enters the lamp housing and other electrical components.

- The appliance should be cleaned regularly using a solution of bicarbonate of soda and lukewarm water.

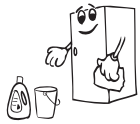

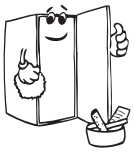

- Clean the accessories separately by hand with soap and water. Do not wash accessories in a dish washer.



- Clean the condenser with a brush at least twice a year. This will help you to save on energy costs and increase productivity.

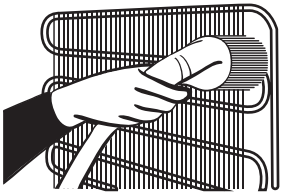

The power supply must be disconnected during cleaning.

Replacing LED Lighting

If your appliance has LED lighting contact the help desk as this should be changed by authorized personnel only.

PART - 5. TRANSPORTATION AND CHANGING OF INSTALLATION POSITION

Transportation and Changing Positioning

- The original packaging and foam may be kept for re-transportation (optional).
- Fasten your appliance with thick packaging, bands or strong cords and follow the instructions for transportation on the packaging.
- Remove all movable parts (shelves, accessories, vegetable bins, and so on) or fix them into the appliance against shocks using bands when re-positioning or transporting.

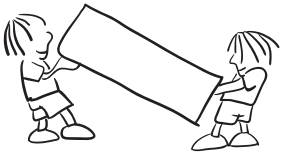

⚠ Always carry your appliance in the upright position.

Repositioning the Door

- It is not possible to change the opening direction of your appliance door if door handles are installed on the front surface of the appliance door.
- It is possible to change the opening direction of the door on models without handles and models with handles mounted on the sides.
- Please refer to the separate document with instructions on installation and door reversal.

⚠ **CAUTION!** At every stage of reversing the door protect the floor from scratching with a durable material.

PART - 6. BEFORE CALLING YOUR AFTER SALES SERVICE

Errors

Your fridge will warn you if the temperatures for the cooler is at improper levels or if a problem occurs with the appliance. In case of a problem within the fridge, the alarm led will release red light.

Alarm indicator LED is turning on	MEANING	WHY	WHAT TO DO
⚠ 	"Failure" Warning	There is/are some part(s) out of order or there is a failure in the cooling process. The product is plugged for the first time or a long-time power interruption for 1 hour.	Check the door is open or not and check if the product working 1 hour. If the door is not open and the product had worked 1 hour, call service for assistance as soon as possible.

If your fridge is not working properly, it may be a minor problem, therefore check the following, before calling an electrician to save time and money.

Your fridge is not operating

Check if:

- There is power
- The plug is correctly connected to the socket
- The plug or mains fuse has blown
- The socket is faulty. Examine this by plugging your fridge into a working socket.

What to do if your appliance performs poorly;

Check that;

- You have not overloaded the appliance ,
- The fridge temperature set to 8.
- The door is closed perfectly ,
- There is no dust on the condenser ,
- There is enough place at the rear and side walls.

Your fridge is operating noisily

Cracking (ice cracking) noise occurs:

- During automatic defrosting.
- When the appliance is cooled or warmed (due to expansion of appliance material).

Motor noise: Indicates the compressor is operating normally. The compressor may cause more noise for a short time when it is first activated.

Bubbling noise and splash: Due to the flow of the refrigerant in the tubes of the system.

Air blowing noise: Indicates normal operation of the system due to the circulation of air.

There is a build-up of humidity inside the cooler

Check if:

- All food is packed properly. Containers must be dry before being placed in the fridge.
- The fridge door is opened frequently. Humidity of the room enters the fridge when the doors are opened. Humidity increases faster when the doors are opened more frequently, especially if the humidity of the room is high.

The door is not opening and closing properly

Check if:

- There is food or packaging preventing the door from closing
- The door compartments, shelves and drawers are placed properly
- The door joints are broken or torn
- Your fridge is level.

Recommendations

To stop the appliance completely, unplug from main socket (for cleaning and when the door is left open).

Hints for Energy Saving

1. Install the appliance in a cool, well-ventilated room, but not in direct sunlight and not near a heat source (such as a radiator or oven) otherwise an insulating plate should be used.
2. Allow warm food and drinks to cool before placing them inside the appliance.
3. Drinks or other liquids should be covered when inside the appliance. If left uncovered, the humidity inside the appliance will increase, therefore the appliance uses more energy. Keeping drinks and other liquids covered helps preserve their smell and taste.
4. Avoid keeping the doors open for long periods and opening the doors too frequently as warm air will enter the appliance and cause the compressor to switch on unnecessarily often.
5. Keep the covers of the different temperature compartments (such as the crisper and chiller) closed.
6. The door gasket must be clean and pliable. In case of wear, if your gasket is detachable, replace the gasket. If not detachable, you have to replace the door.
7. Eco mode / default setting function preserves fresh foods while saving energy.
8. Fresh Food Compartment (Fridge): Most efficient use of energy is ensured in the configuration with the drawers in the bottom part of the appliance, and shelves evenly.

PART - 7. DESCRIPTION OF THE APPLIANCE

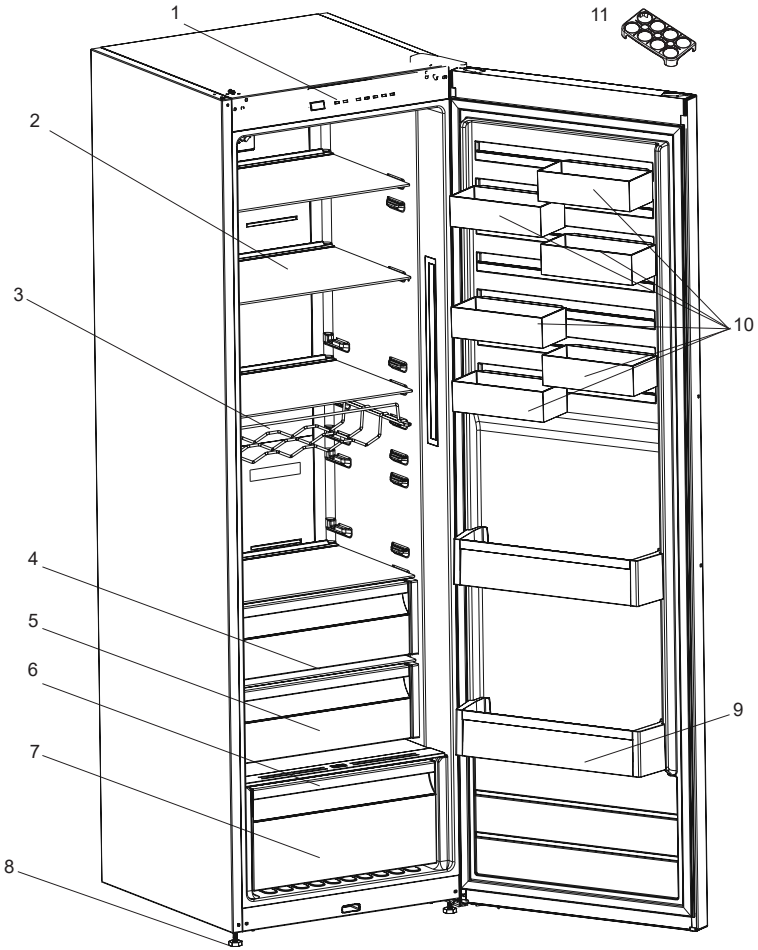

This presentation is only for information about the parts of the appliance. Parts may vary according to the appliance model.

1) Control panel
2) Refrigerator shelves
3) Wine rack (Bottle shelf)
4) Upper crisper *
5) Chill Drawer *
6) Crisper cover
7) Crisper
8) Levelling feet
9) Bottle shelf
10) CustomFlex*
11) Egg holder

*In some models

PART - 8. TECHNICAL DATA

The technical information is situated in the rating plate on the internal side of the appliance and on the energy label.

The QR code on the energy label supplied with the appliance provides a web link to the information related to the performance of the appliance in the EU EPREL database.

Keep the energy label for reference together with the user manual and all other documents provided with this appliance.

It is also possible to find the same information in EPREL using the link *https://eprel.ec.europa.eu* and the model name and product number that you find on the rating plate of the appliance.

See the link *www.theenergylabel.eu* for detailed information about the energy label.

PART - 9. INFORMATION FOR TEST INSTITUTES

Installation and preparation of the appliance for any EcoDesign verification shall be compliant with EN 62552. Ventilation requirements, recess dimensions and minimum rear clearances shall be as stated in this User Manual at PART 1. Please contact the manufacturer for any other further information, including loading plans.

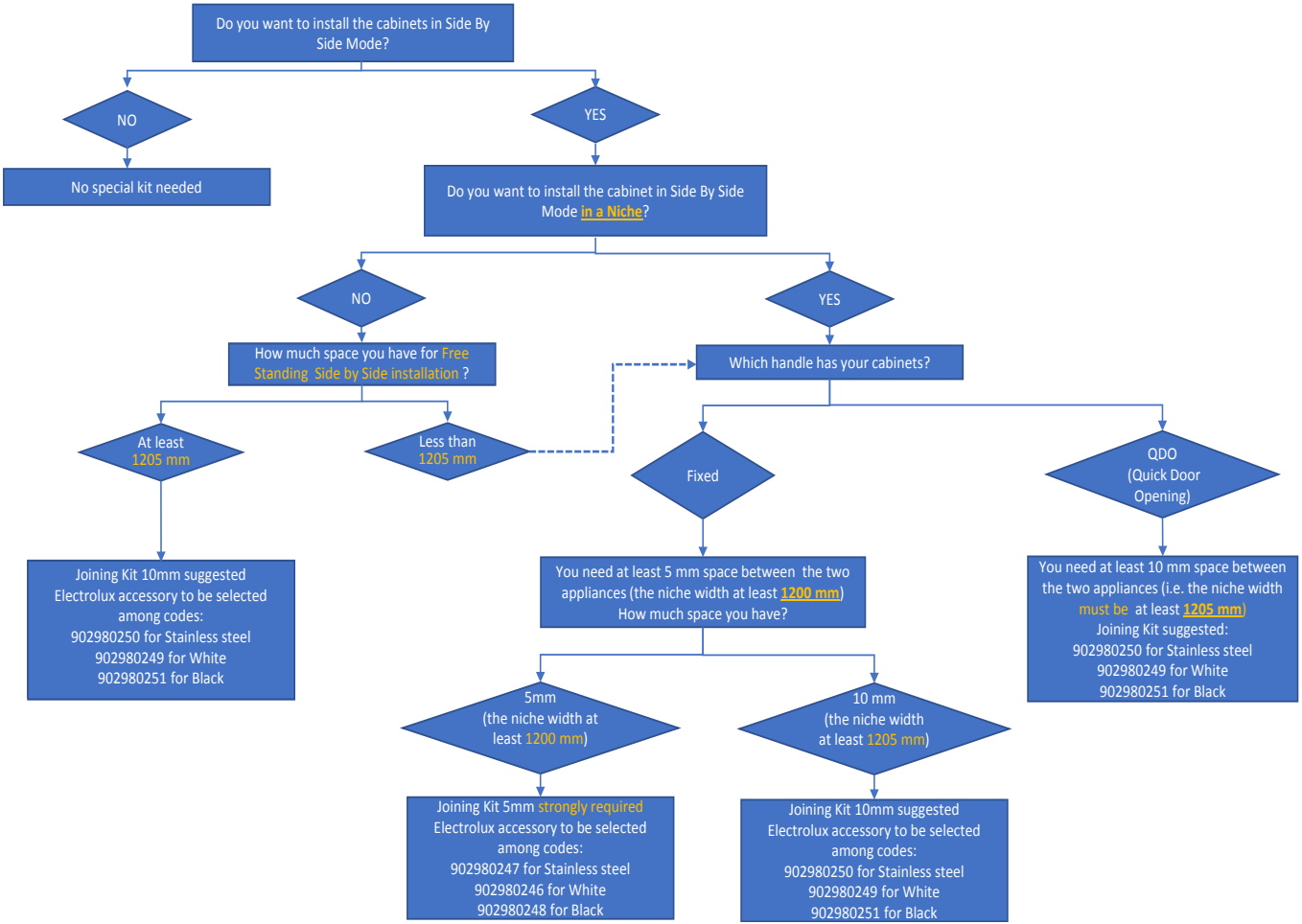
Do you want to install the cabinets in Side By Side Mode?
NO
No special kit needed
YES
Do you want to install the cabinet in Side By Side Mode in a Niche?
NO
How much space you have for Free Standing Side by Side installation ?
At least 1205 mm
Joining Kit 10mm suggested Electrolux accessory to be selected among codes:
902980250 for Stainless steel
902980249 for White
902980251 for Black
Less than 1205 mm
YES
Which handle has your cabinets?
Fixed
You need at least 5 mm space between the two appliances (the niche width at least 1200 mm)
How much space you have?
5mm (the niche width at least 1200 mm)
Joining Kit 5mm strongly required
Electrolux accessory to be selected among codes:
902980247 for Stainless steel
902980246 for White
902980248 for Black
10 mm (the niche width at least 1205 mm)
Joining Kit 10mm suggested
Electrolux accessory to be selected among codes:
902980250 for Stainless steel
902980249 for White
902980251 for Black
QDO (Quick Door Opening)
You need at least 10 mm space between the two appliances (i.e. the niche width must be at least 1205 mm)
Joining Kit suggested:
902980250 for Stainless steel
902980249 for White
902980251 for Black

www.electrolux.com/shop



CE

PNC CODE: 923421347
PNC CODE: 923421352
PNC CODE: 923421348
PNC CODE: 923421353