32-Bottle Dual Zone Touchscreen Refrigerator

INSTRUCTION MANUAL

To ensure proper use of this appliance and your safety, please read the following instructions completely before operating this appliance.

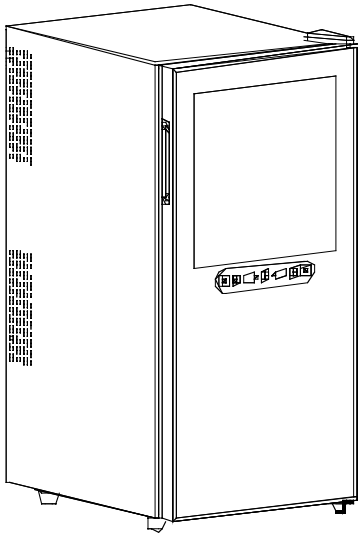

WineEnthusiast.com

800.356.8466

Table of Contents

Structure and Electro Circuit Control Diagram ...……...… page 2

Technical Data……..... page 3

Important Safety Instructions…….. page 4

Installation Instructions..... page 5

Electrical Connection…….. page 6

Operating Your Wine Refrigerator……... page 7

Care and Maintenance……. page 8

Troubleshooting Guide…… page 9

Limited Warranty……. page 10

Structure

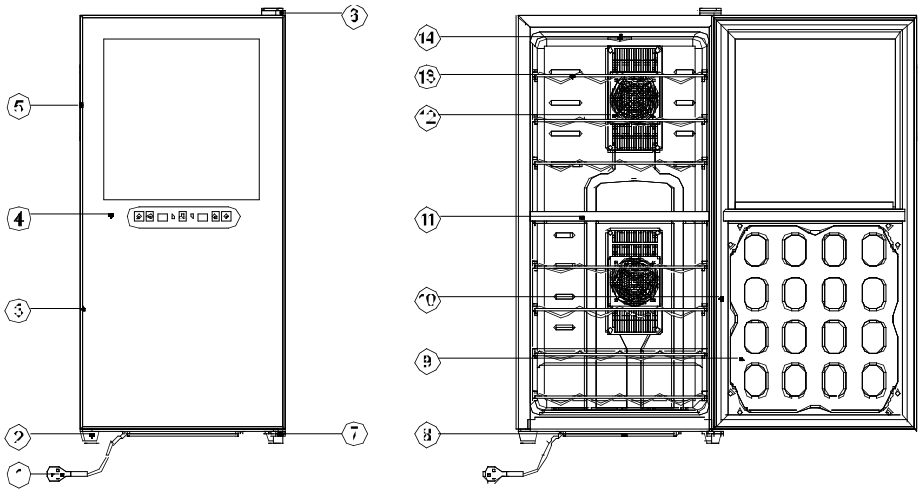

1.	Cable Connection	8.	Water Box
2.	Foot	9.	Door Liner
3.	Door	10.	Door Seal
4.	Temperature Control Board	11.	Divided Board
5.	Handle	12.	Fan Mask
6.	Upper Hinge Cover	13.	Shelf
7.	Down Hinge	14.	Lamp Cover

Electro Circuit Control Diagram

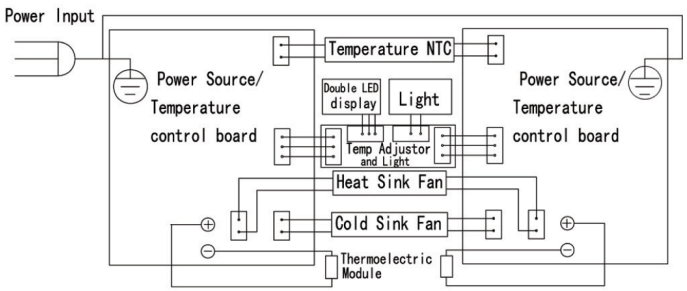

Technical Data

Model No.	32-Bottle 2-Temp Touchscreen Refrigerator
Capacity	78L
Voltage	110-120V
Current	1.9A (@77°F)
Protection Class	I
Frequency	60Hz
Climate Class	SN ; N
Input Power	140W (@77°F)
Power Consumption KW · h/24h	1.3
Max Temperature Difference	>56°F
Temperature Control Range	46-66°F (lower zone) 54-66°F (upper zone)
Approx. Net Weight	56.9LBS
Approx. Gross Weight	60.8LBS
Approx. Shape Size (H x W x D) inch	33.4’ x 15.8’ x 20.2
Approx. Packing Size (H x W x D) inch	35’ x 18.7’ x 22.5’

IMPORTANT SAFETY INSTRUCTIONS

⚡ WARNING ⚡	To reduce the risk of fire, electrical shock, or injury when using your appliance, follow these basic precautions:

- Read all instructions before using the wine refrigerator.
- **DANGER or WARNING:** Risk of child entrapment.
- Child entrapment and suffocation are not problems of the past. Junked or abandoned appliances are still dangerous…even if they will "just sit in the garage a few days."
- **Before you throw away your old wine refrigerator:** Take off the door. Leave the shelves in place so that children may not easily climb inside.
- Never allow children to operate, play with, or crawl inside the appliance.
- Never clean appliance parts with flammable fluids. The fumes can create a fire hazard or explosion.
- Do not store or use gasoline or any other flammable vapors or liquids in the vicinity of this or any other appliances. The fumes can create a fire hazard or explosion.

-Save these instructions-

INSTALLATION INSTRUCTIONS

Before Using Your Wine Refrigerator

- Remove any exterior and interior packing material.
- Check to be sure the following parts are included:
  - 4 slide out shelves.
  - 1 instruction manual.
- Before connecting the appliance to the power source, let it stand upright for approximately 2 hours. This will reduce the possibility of a malfunction in the cooling system from handling during transportation.
- Clean the interior surface with lukewarm water using a soft cloth.

INSTALLING YOUR WINE REFRIGERATOR

- Place your appliance on a floor that is strong enough to support the appliance when it is fully loaded. To level your appliance, adjust the front legs at the bottom of the appliance.
- Keep away from direct sunlight and sources of excess of heat (stove, heater, radiator, etc.). Direct sunlight may affect the acrylic coating and heat sources may increase electrical consumption. Extreme cold or hot ambient temperature may also cause the appliances not to perform properly.
- This model is not meant to be built-in to cabinetry, recessed or put underneath a counter. Additionally this model is not meant to be used in an enclosed area. While the back of the unit does produce a minimal amount of heat, it still needs to vent to an open area.

ELECTRICAL CONNECTION

Warning

Improper use of the grounded plug can result in the risk of electrical shock. If the power cord is damaged, please contact Wine Enthusiast.

.

- This unit should be properly grounded for your safety. The power cord of this unit is equipped with a 3-pin plug which mates with 3-pin wall outlets to minimize the possibility of electrical shock. Do not under any circumstances cut or remove the ground wire from the power cord supplied
- Use of extension cords is not recommended
- This unit requires a standard 110V ~ 60Hz electrical outlet with 3-pin plug.
- The cord should be secured behind the wine refrigerator and not left exposed or dangling to prevent accidental injury.

IMPORTANT SAFEGUARDS

Do not store food in wine refrigerator, as interior temperature may not get cold enough to prevent spoilage.

OPERATING YOUR WINE REFRIGERATOR

It is recommended that you keep the wine refrigerator in a place where the ambient temperature is below 75°F. If the ambient temperature is above or below recommended temperature, the performance of the unit may be affected. For example, placing in extreme cold or hot conditions may cause interior temperature to fluctuate. The range of setting temperature may not be reached.

**In order to reach the lowest temperature (lower zone), the best ambient temperature will be around 60-65°F

The display reflects the temperature at the center of the wine refrigerator. Temperature may fluctuate approximately +/-7 degrees at the top to the bottom.

The temperature may fluctuate depending on whether or not the interior light is on or off or whether the bottles are located on the upper/middle or lower section.

How to use the Display Panel:

You can set the temperature as you desire by using the press buttons. Use the "▲" and "▼" to adjust the temperature by 1°F among 46-66°F for lower zone or 54-66°F.for upper zone. You can turn the interior light on or off by pressing the "light" button.

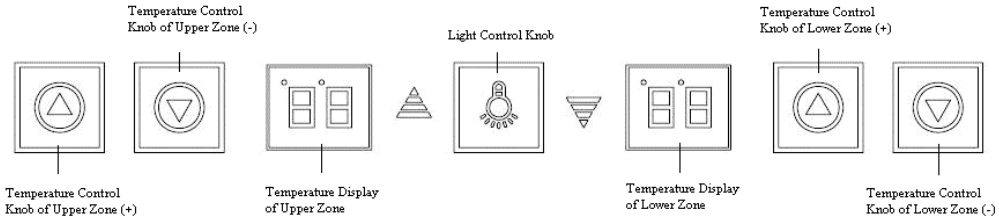

CARE AND MAINTENANCE

Cleaning Your Wine Refrigerator

- Unplug the wine refrigerator and remove the bottles.
- Wash the inside with a warm water and baking soda solution. The solution should be about 2 tablespoons of baking soda to a quart of water.
- The outside of the wine refrigerator should be cleaned with mild detergent and warm water.
- Unscrew the water box at the bottom, and wash it.

Storage

Shelving is meant to hold standard 750ml size bottles, using larger Pinot Noir / Rhone size bottles may limit the capacity. If you would like to store larger bottles you can easily remove any of the shelves. This will also prevent scraping the labels on the larger bottles.

Our wine refrigerators are made to store your wine at the perfect temperature. The proper **storing temperature** for the all wine, both red and white, is 53°F - 57°F.

Moving Your Wine Refrigerator

- Remove all the bottles.
- Securely tape down the shelves inside your wine refrigerator.
- Spin the leveling legs up to the base to avoid damage.
- Tape the door shut
- Be sure the wine refrigerator stays in the upright position during transportation

PROBLEM WITH YOUR WINE REFRIGERATOR?

You can solve many common wine refrigerator problems easily, saving you the cost of a possible service call. Try the suggestions below to see if you can solve the problem before calling Wine Enthusiast customer service.

TROUBLESHOOTING GUIDE

PROBLEM	POSSIBLE CAUSE
Wine refrigerator does not operate.	Not plugged in. The circuit breaker tripped or a blown fuse in your home.
Wine refrigerator is not cold enough.	Check the temperature control setting. External environment may be too hot. The door is opened too often. The door is not closed completely. The door seal does not seal properly. The wine refrigerator does not have the correct clearances.
The light does not work.	Call the service center.
Vibrations.	Check to assure that the wine refrigerator is level.
The wine refrigerator seems to make too much noise.	The wine refrigerator is not level. Check the fan.
The door will not close properly.	The wine refrigerator is not level. The doors were reversed and not properly installed. The seal is weak. The shelves are out of position.
LED could not display.	Main control board does not work.
Press-buttons are not functional.	Control panel is damaged.

LIMITED WARRANTY

Please speak to your Retailer before calling Wine Enthusiast if you did not purchase your Wine Cellar directly from Wine Enthusiast.

Limited warranty – 90 day replacement plan with a free 9 month upgrade, totaling 1 year, on parts and labor from the date of shipment. For customer service, please contact Wine Enthusiast by e-mail (custserv@WineEnthusiast.net) or by phone (800.648.6058).

The limited warranty does not cover: Damage due to such things as accident, misuse, abuse, mishandling, neglect, unauthorized repair or any other cause beyond the control of the seller whether similar or dissimilar to the foregoing. Purchaser understands and acknowledges that the goods sold here are wine refrigerators, which house wine. Purchaser assumes all the risk of using these units, including risk of spoilage, humidity variations, temperature variations, leaks, fires, water damage, mold, mildew, dryness and similar perils that may occur.

SERVICE & IMPORTANT NOTICE

- Upon receipt of unit and inspection, if supply cord is damaged, it must be replaced. Contact customer service at Wine Enthusiast for assistance. For any additional technical service, please contact Wine Enthusiast at 800.648.6058.
- WARNING : Please do not use where children can touch the unit, nor let children use the unit by themselves.

c ETL us
Intertek
3097648
Conforms to UL Std.250
Certified to CSA Std.C22.2 No.63