UPRIGHT FREEZER

Instruction Manual

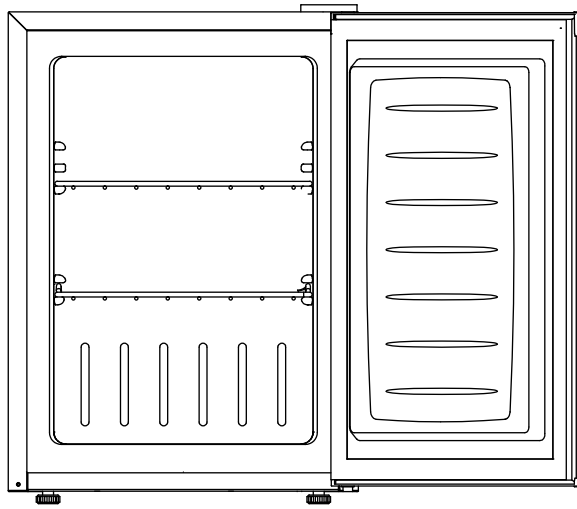

Thanks for your purchase. Any questions please don't hesitate to contact us, We will handle all your problem ASAP. Your feedback is vital to us! And we will always try to do better. For more details, please contact us by email via support@rovsun.com. (Write your seller's Order # on the subject of the email, so that we can find your order and better assist your issue) Or call us at (1)855-882-2333 .

Model:BD-60-E

IMPORTANT SAFETY INSTRUCTIONS

⚠ WARNING

Read all of the instructions before using this appliance. When using this appliance, always exercise basic safety precautions, including the following:

NOTE: If the freezer has been placed in a horizontal or tilted position for any period of time wait 24 hours before plugging the unit in.

1. Use this appliance only for its intended purpose as described in this use and care guide.
2. This freezer must be properly installed in accordance with the installation instructions before it is used. See grounding instructions in the installation section.
3. Never unplug your freezer by pulling on the power cord. Always grasp the plug firmly and pull straight out from the outlet.
4. Repair or replace immediately, all electric service cords that have become frayed or otherwise damaged. Do not use a cord that shows cracks or abrasion damage along its length, the plug or the connector end.
5. Unplug your freezer before cleaning or before making any repairs.
6. Do not use any electrical device or any sharp instrument in defrosting your freezer.
7. If your old freezer is not being used, we recommend that you remove the doors. This will reduce the possibility of danger to children.
8. **WARNING:** After your freezer is in operation, do not touch the cold surfaces in the freezer compartment, particularly when hands are damp or wet. Skin may adhere to these extremely cold surfaces.
9. Do not refreeze foods, which have been thawed completely. The United States Department of Agriculture in Home and Garden Bulletin No. 69 reads: "...You may safely refreeze frozen foods that

have thawed if they still contain ice crystals or if they are still cold-below 40˚F".

"...Thawed ground meats, poultry, or fish that have any off-odor or off-color should not be refrozen and should not be eaten. Thawed ice cream should be discarded. If the odor or color of any food is poor or questionable, discard it. The food may be dangerous to eat."

"...Even partial thawing and re-freezing reduce the eating quality of foods, particularly fruits, vegetables, and prepared foods. The eating quality of red meats is affected less than that of many other foods. Use refrozen foods as soon as possible, to save as much of its eating quality as you can.

10. This freezer should not be recessed or built-in an enclosed cabinet. It is designed for freestanding installation only.
11. Do not operate your freezer in the presence of explosive fumes.

SAVE THESE INSTRUCTIONS

HOUSEHOLD USE ONLY

⚠ DANGER

Risk of child entrapment. Before you throw away your old refrigerator or freezer, take off the doors. Leave the shelves in place so that children may not easily climb inside.

PRODUCT REGISTRATION

Thank you for purchasing our product. This easy-to-use manual will guide you in getting the best use of your product.

Remember to record the model and serial numbers. They are on a label inside of the unit.

_____

Model number

_____

Serial number

_____

Date of purchase

PARTS & FEATURES

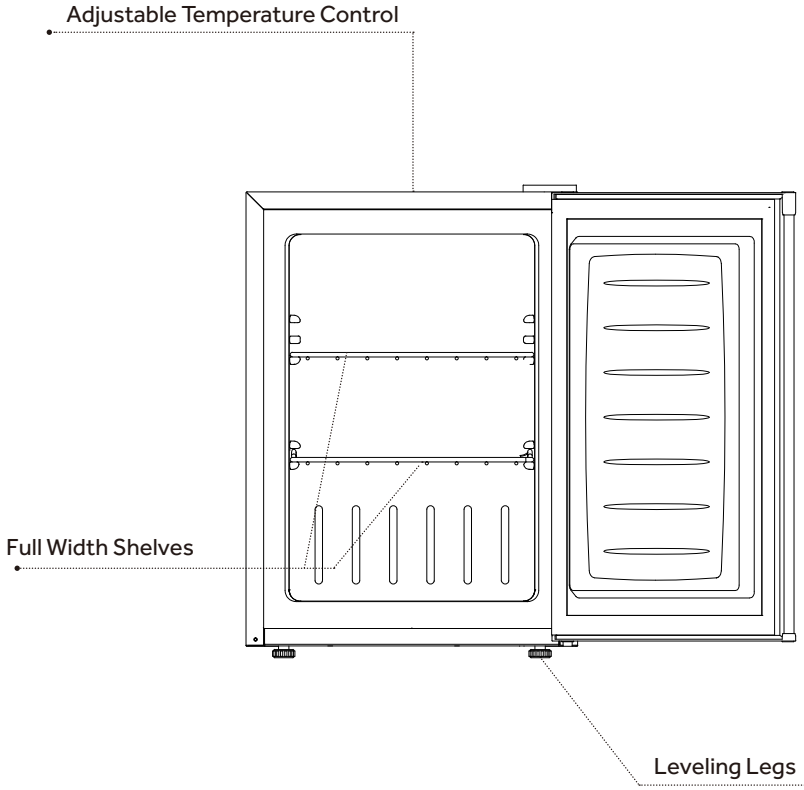

INSTALLING YOUR FREEZER

UNPACKING YOUR FREEZER

1. Remove all packaging material. This includes the foam base and all adhesive tape holding the freezer accessories inside and outside.
2. Inspect and remove any remains of packing, tape or printed materials before powering on the freezer.

ADJUSTING YOUR FREEZER

- Your freezer is designed for freestanding installation only. It should not be recessed or built-in.
- Place the freezer on a surface strong enough to support it fully loaded.
- When moving the freezer, never tilt it more than a 45-degree angle. This could damage the compressor and the sealed system.
- If the freezer is tilted let it stand in an upright position for at least 24 hours prior to plugging in. This is to allow the refrigerant to settle.

PROPER AIR CIRCULATION

- To assure your freezer works at the maximum efficiency it was designed for, you should install it in a location where there is proper air circulation, plumbing and electrical connections.
- The following are recommended clearances around the freezer:
  Sides.....4" (102mm)
  Back.....4" (102mm)
  Top.....4" (102mm)

⚠ WARNING

ELECTRICAL REQUIREMENT - SHOCK HAZARD

ELECTRICAL REQUIREMENT

- Make sure there is a suitable power Outlet (115 volts, 15 amps outlet) with proper grounding to power the freezer.
- Avoid the use of three plug adapters or cutting off the third grounding in order to accommodate a two plug outlet. This is a dangerous practice since it provides no effective grounding for the freezer and may result in shock hazard.

⚠ WARNING

USE OF EXTENSION CORDS- POTENTIAL SAFETY HAZARD

USE OF EXTENSION CORD

- Avoid the use of an extension cord because of potential safety hazards under certain conditions. If it is necessary to use an extension cord, use only a 3-wire extension cord that has a 3-blade grounding plug and a 3-slot outlet that will accept the plug. The marked rating of the extension cord must be equal to or greater than the electrical rating of the appliance. DO NOT USE EXTENSION CORD LONGER THAN 12 FT.

INSTALL LIMITATIONS

- Do not install your freezer in any location not properly insulated or heated e.g. garage etc. Your freezer was not designed to operate in temperature settings below 55˚ Fahrenheit.
- Select a suitable location for the freezer on a hard even surface away from direct sunlight or heat source e.g. radiators, baseboard heaters, cooking appliances etc. Any floor unevenness should be corrected.

FREEZER FEATURES AND USE

OPERATING YOUR FREEZER

- Once the freezer is in its proper place, plug it in an electrical outlet having 115 volts and 15 amps.
- Set the temperature, on the temperature control knob. “1” being the warmest and “7” being the coldest. Initially set the temperature on “4”. Place food inside the freezer. After using the freezer for 24 hours set the freezer to your desired setting.
- In case you unplug your freezer or experience an electrical outage, allow 5 minutes before plugging it back in.

GENERAL FEATURES

Adjustable temperature dial:

Your freezer will automatically maintain the temperature level you select. The temperature control dial has 7 settings plus OFF. “1” is the warmest, “7” is the coldest. Turning the dial to OFF stops cooling the freezer. Set the dial to “4” and allow 24 hours to pass before adjusting the temperature to your needs.

NOTE: If the freezer has been placed in a horizontal or tilted position for any period of time wait 24 hours before plugging the unit in.

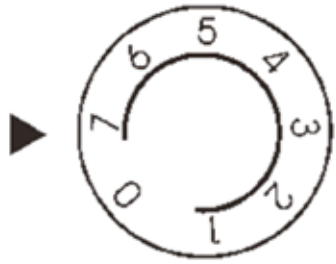

Control Panel
Varies by Model

NORMAL OPERATING SOUNDS YOU MAY HEAR

- Boiling water, gurgling sounds or slight vibrations that are the result of the refrigerant circulating through the cooling coils.

- The thermostat control will click when it cycles on and off.

DEFROSTING

- For most efficient operation and minimum energy consumption, defrost whenever the frost becomes 1/4" thick. Never use a sharp or metallic instrument to remove the frost, as it may damage the cooling coils. (A punctured coil will void the warranty). Use only a plastic scraper. Do not use boiling water as it may damage the unit.
- Remove frozen food from the freezer and place it in a cooler to protect the food.
- Turn the temperature control to OFF position and unplug the unit. Defrosting usually takes a few hours. To defrost faster keep the freezer door open.

DEFROST DRAIN

Place a narrow defrost pan (not included) in front of the freezer, gently slide the defrost drain outward. Water that has accumulated at the bottom of the freezer during defrosting will drain into the pan.

NOTE: Monitor the defrost pan to avoid overflow.

- When defrosting is complete, wipe the interior of the freezer with a soft cloth. Plug in power cord back into the electrical outlet.
- Reset the temperature control to the desired setting.
- Return the food into the freezer.

LEVELING YOUR FREEZER

- Your freezer has two leveling legs which are located in the front bottom corners of your freezer. After properly placing your freezer in its final position, you can level your freezer.
- Leveling legs can be adjusted by turning them counterclockwise to raise your freezer or by turning them clockwise to lower your freezer. The freezer door will close easier when leveling legs are extended.

DOOR ALIGNMENT

1. Remove the top hinge cover using a flat head screw driver. Gently lift from the rear of the hinge and slide forward.
2. Lossen the top hinge screws using a Phillips head screwdriver.
3. Adjust the door or put a spacer in between and then tighten the screws.
4. Replace the top hinge cover by aligning the rear of the cover with the rear of the hinge. Press firmly on the front of the cover until it snaps in place.

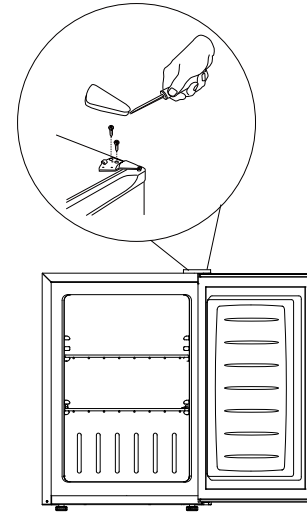

FOOD STORAGE INFORMATION

Frozen Food:

- Wipe containers before storing to avoid needless spills.
- Hot food should be allowed to cool before storing in the freezer. This will prevent unnecessary energy use.
- When storing meats, keep in the original packaging or rewrap as necessary.
- Proper freezer storage requires correct packaging. All foods must be in packages, which do not allow the flow of air or moisture in, or out. Improper storage will result in odor and taste transfer and will result in the drying out of the improperly packaged food.
- Follow package or container instructions for proper storage.
- Packaging Recommendations:

  Plastic containers with air tight lids

  Heavy duty aluminum foil

  Plastic wrap made from saran film

  Self-sealing plastic bags

- Do not refreeze defrosted/thawed foods.
- It is recommended that the freezing date be marked on the packaging.

These are some suggestions for safe storage:

• TV Dinners	3 - 4 Months
• Fresh Shrimp, scallops, crawfish	3 - 6 Months
• Hamburger & stew meats	3 - 4 Months
• Ground Turkey, veal, pork	3 - 4 Months
• Chops	4 - 6 Months
• Steaks	6 - 12 Months
• Chicken or turkey, whole	1 year

For detailed storage chart visit FDA website:
www.cfsan.fda.gov/~dms/fttstore.html

PROPER FREEZER CARE AND CLEANING

CLEANING AND MAINTENANCE

⚠ WARNING

To avoid electric shock always unplug your freezer before cleaning. Ignoring this warning may result in death or injury.

⚠ CAUTION

Before using cleaning products, always read and follow manufacturer's instructions and warnings to avoid personal injury or product damage.

GENERAL:

- Prepare a cleaning solution of 3-4 tablespoons of baking soda mixed with warm water. Use sponge or soft cloth, dampened with the cleaning solution, to wipe down your freezer.
- Rinse with clean warm water and dry with a soft cloth.
- Do not use harsh chemicals, abrasives, ammonia, chlorine bleach,concentrated detergents, solvents or metal scouring pads. SOME of these chemicals may dissolve, damage and/or discolor your freezer.

DOOR GASKETS:

- Clean door gaskets every three months according to general instructions. Gaskets must be kept clean and pliable to assure a proper seal.
- Petroleum jelly applied lightly on the hinge side of gaskets will keep the gasket pliable and assure a good seal.

POWER INTERRUPTIONS

- Occasionally there may be power interruptions due to thunderstorms or other causes. Remove the power cord from AC outlet when a power outage occurs. When power has been restored, replug power cord to AC outlet. If outage is for a prolonged period, inspect and discard spoiled or thawed food in freezer. Clean freezer before reusing.

VACATION AND MOVING CARE

- For long vacations or absences, empty food from freezer, move the temperature DIAL to the OFF position and clean the door gaskets according to "General cleaning" section. Prop doors open, so air can circulate inside. When moving always move the freezer vertically. Do not move with the unit lying down. Possible damage to the sealed system could occur.

⚠ WARNING

If outage is for a prolonged period, inspect and discard spoiled or thawed food in freezer. Clean freezer before reusing.

TROUBLESHOOTING

FREEZER DOES NOT OPERATE:
- Check if thermostat control is not in the “OFF” position.
- Check if freezer is plugged in.
- Check if there is power at the ac outlet, by checking the circuit breaker.
- Wait for 30-40 minutes to see whether freezer will start. Compressor cycle must be complete to operate.

FOOD TEMPERATURE APPEARS TOO WARM:
- Frequent door openings.
- Allow time for recently added warm food to reach freezer temperature.
- Check gaskets for proper seal.
- Clean condenser coils (for models with exposed condenser coils).
- Adjust temperature control to colder setting.

FOOD TEMPERATURE IS TOO COLD:
- If temperature control setting is too cold, adjust to a warmer setting and allow several hours for temperature to adjust.

COMPRESSOR RUNS TOO FREQUENTLY:
- This may be normal to maintain constant temperature during high temperature and humid days.
- Doors may have been opened frequently or for an extended period of time.
- Check gasket for proper seal.
- Check to see if doors are completely closed.
- Check freezer compartment for blockage from frozen food packages, containers, etc.

FREEZER HAS AN ODOR:
- Interior needs cleaning.
- Foods improperly wrapped or sealed are giving off odors.



DANGER – Risk Of Fire Or Explosion. Flammable Refrigerant Used. To Be Repaired Only By Trained Service Personnel. Do Not Puncture Refrigerant Tubing

CAUTION – Risk Of Fire Or Explosion. Flammable Refrigerant Used. Consult Repair Manual/Owner’s Guide Before Attempting To Service This Product. All Safety Precautions Must be Followed

CAUTION – Risk Of Fire Or Explosion. Dispose Of Property In Accordance With Federal Or Local Regulations. Flammable Refrigerant Used

CAUTION – Risk Of Fire Or Explosion Due To Puncture Of Refrigerant Tubing; Follow Handling Instructions Carefully. Flammable Refrigerant Used