TRICITY BENDIX



INSTALLATION AND INSTRUCTION MANUAL

REFRIGERATOR/FREEZER FD806W
ECD806

Download from Www.Somanuals.com. All Manuals Search And Download.

Thank you for buying a TRICITY BENDIX DOMESTIC APPLIANCE

To enable you to use your appliance effectively and safely, please read this instruction book carefully before using the appliance and retain for future reference. If you require guidance in the use of the appliance or require further information, please contact our Customer Care Department.

TRICITY BENDIX
CUSTOMER CARE DEPARTMENT
P.O. BOX 47
NEWBURY
BERKSHIRE
RG14 5XL

Tel: 01635 525542
Fax: 01635 42970

Guide to use the instruction book

The following Symbols will be found in the text to guide you through the instructions

 Safety Instructions

 Hints and Tips

 Step by step instructions for an operation

 Environmental Information

Download from Www.Somanuals.com. All Manuals Search And Download.

⚠ IMPORTANT SAFETY INSTRUCTIONS

These warnings are provided in the interests of your safety. Ensure that you understand them all before installing or using this appliance. Your safety is of paramount importance. If you are unsure about any of the meanings or these warnings contact the Customer Care Department.

Installation

- This appliance is heavy. Care should be taken when moving it.
- It is dangerous to alter the specifications or attempt to modify this product in any way.
- Ensure that the appliance does not stand on the electrical supply cable. If the supply cord is damaged, it must be replaced by a special cord available from your local Service Force Centre.
- Any electrical work required to install this appliance should be carried out by a qualified electrician or competent person.
- Parts which heat up should not be exposed. Whenever possible, the back of the appliance should be close to a wall but leaving the required distance for ventilation as stated in the installation instructions.
- The appliance should be left for 2 hours after installation before it is turned on, in order to allow the refrigerant to settle.

Child Safety

- Do not allow children to tamper with the controls or play with the product.

During Use

- This appliance is designed for domestic use only, specifically for the storage of edible foodstuffs only.
- Frozen food should not be refrozen once it has thawed out.
- Do not place carbonated or fizzy drinks in the freezer.
- Ice lollies can cause 'frost/freezer burns' if consumed straight from the freezer.
- Do not remove items from the freezer if your hands are damp/wet, as this could cause skin abrasions or frost/freezer burns.
- Manufacturers' recommended storage times should be adhered to. Refer to relevant instructions.

Maintenance and Cleaning

- Switch off, and unplug the appliance before carrying out any cleaning or maintenance work.
- Do not use sharp instruments to scrape off frost or ice. (See defrosting instructions).

Servicing

- This product should be serviced by an authorised engineer, and only genuine spare parts should be used.
- Under no circumstances should you attempt to repair the machine yourself. Repairs carried out by inexperienced persons may cause injury or serious malfunctioning. Contact your local Service Force Centre.

At the End of the appliance Life

- When disposing of your appliance, use an authorised disposal site.
- Remove the plug and ensure that any locks or catches are removed, to prevent young children being trapped inside.

☞ **Please read this instruction book carefully before use and retain for future reference.**

Download from Www.Somanuals.com. All Manuals Search And Download.

TABLE OF CONTENTS

For the User

Important Safety Instructions 3

Description of the Appliance 5

Using Your Appliance 6
Before Use 6
To Start The Appliance 6
Thermostat Control 6
Larder Compartment 7
Storage Guide 7
Shelf Adjustment 7
The Freezer Compartment 8
Frozen Food Storage 8
Freezing Fresh Food 8

Hints and Tips 9
Normal Operating Sounds 9
Food Storage 9
Energy Saving Advice 9
In the Event of a Power Failure 9

Maintenance and Cleaning 10
Internal Cleaning 10
External Cleaning 10
To Change the Lightbulb 10
Defrosting Your Appliance 11
When the Appliance is Not in Use 11

What Happens if Something Goes Wrong 12

Service and Spare Parts 13

Service Centres 14

For the Installer

Installation Instructions 16

Technical Information 16

Electrical Connections 17
Electrical Requirements 17

Installation requirements 18
Ventilation requirements 18
Levelling 18

Door Reversal 19

Side Fixed Handle Change 20

Guarantee Conditions 21

Download from Www.Somanuals.com. All Manuals Search And Download.

Description of the Appliance

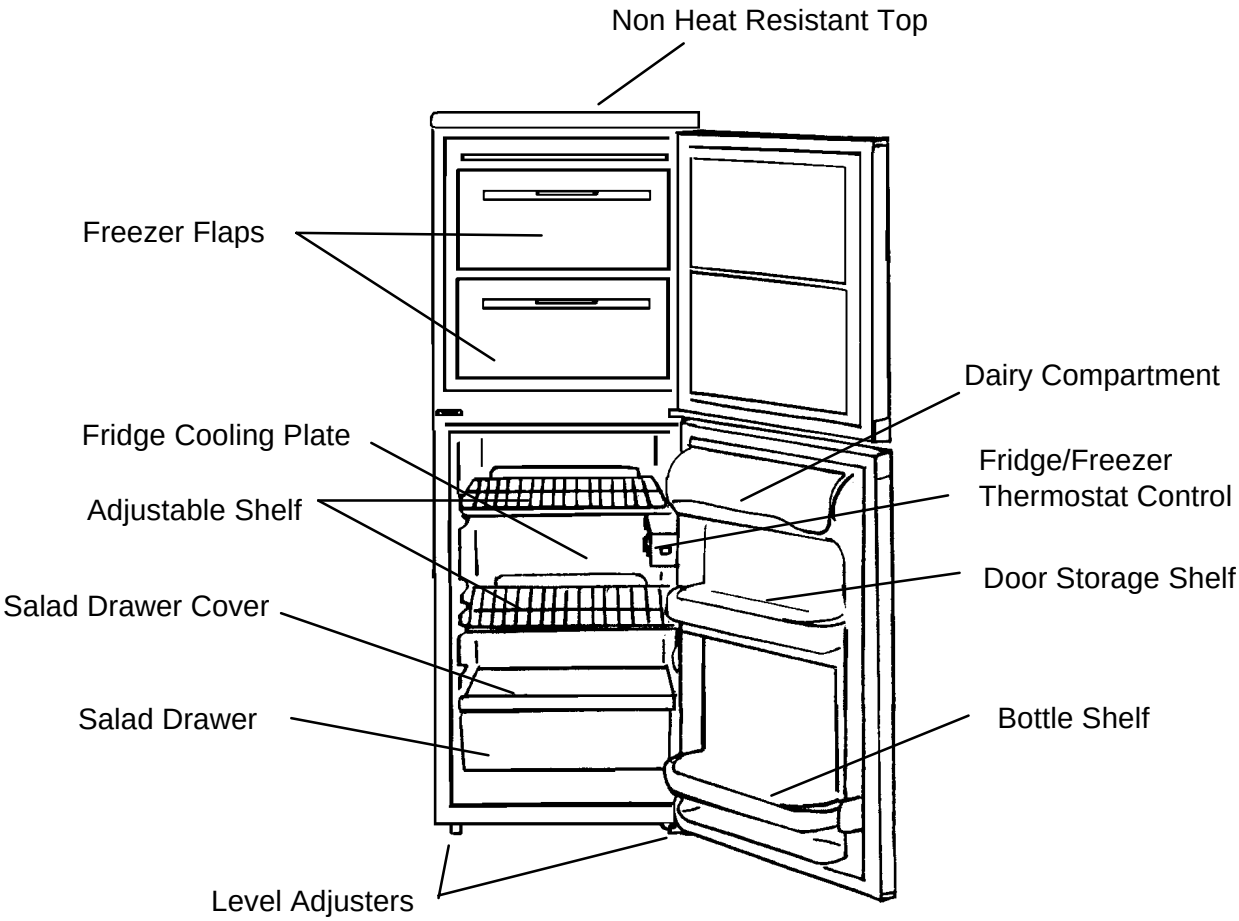

THE FURNISHINGS FROM THE SHRINK WRAP PACK SHOULD BE POSITIONED IN LINE WITH THE ABOVE DIAGRAM

Pack Contents:

FD806W

Wire Shelf/Trim Assembly (2)
Glass Salad Drawer Cover/Trim (1)
Salad Drawer (1)
Egg Tray (1)
Ice Tray (1)

ECD806

Wire Shelf/Trim Assembly (2)
Glass Salad Drawer Cover/Trim (1)
Salad Drawer (1)
Egg Tray (1)
Ice Tray (1)
Butter Dish (1)

Download from Www.Somanuals.com. All Manuals Search And Download.

USING THE APPLIANCE

This appliance is designed for domestic use only, specifically for the storage of edible foodstuffs.

This appliance is designed to operate in ambient temperatures (surrounding air temperature) between 10°C (50°F) and 32°C (90°F).
If these temperatures are exceeded i.e., colder or warmer, the appliance will not operate correctly. Should the ambient temperatures be exceeded for long periods, the temperature in the freezer section will rise above -18°C and food spoilage may occur.

Before Use

Remove all securing tapes.
Wash the inside of the appliance with lukewarm water with a little bicarbonate of soda added (5ml to 0.5 litre of water). Do not use soap or detergent as the smell may linger. Dry the appliance thoroughly.

Do not use detergents, abrasive powders, highly perfumed cleaning products, wax polishes or products containing alcohol.

To Start the Appliance

1. Allow the appliance to stand for 2 hrs after installation.
2. Plug in the appliance and switch on at the mains supply.
3. Turn the thermostat control to the required setting. A setting of 3 - 4 is usually suitable for normal operation (see thermostat control).
4. Leave the appliance for approximately 4 hours for the correct temperature to be reached before placing food inside.

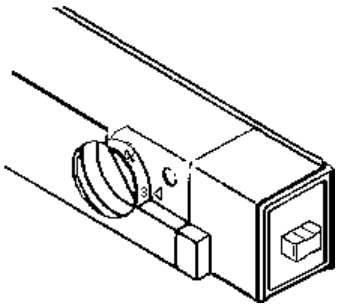

Thermostat Control

The thermostat control inside the fridge compartment regulates the temperature both within the fridge and freezer compartments. Thermostat control is marked from 1-6, the higher the number, the colder the setting.

Position 1 - Cold

Position 6 - Coldest

The temperature will be affected by:

- Ambient temperature
- How often the door is opened
- How much food is stored
- Position of the appliance

In determining the correct temperature control setting, all these factors have to be considered and some experimentation may be necessary.

Do not allow children to tamper with the controls or play with the product.

Download from Www.Somanuals.com. All Manuals Search And Download.

Larder Compartment

The correct temperature for safe storage of fresh food inside is 0°C to 5°C (32°F to 41°F). The warmest part of the fridge compartment is at the top of the cabinet and the coolest at the bottom.

Storage Guide

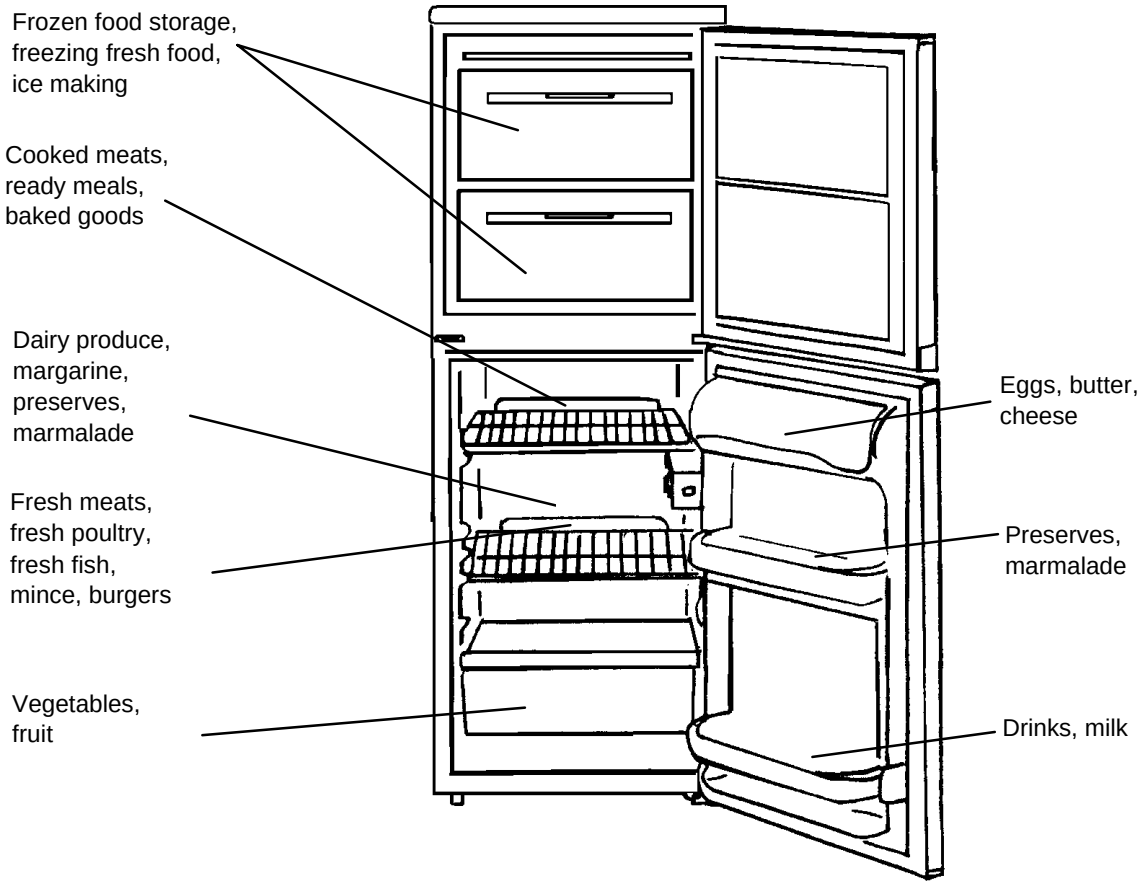

Adjustable shelves

.

Store light items such as small cartons and jars on the shelves provided in the door. The bottle shelf can be used for the storage of heavier bottles.

The larder compartment is fitted with shelves which are adjusted for the storage of different sized articles.

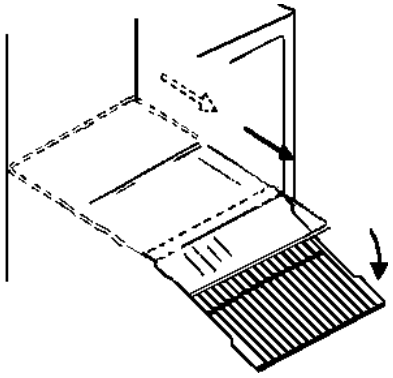

If the door cannot be opened further than 90° remove the shelves by tilting the shelf downwards and pulling outwards.

Download from Www.Somanuals.com. All Manuals Search And Download.

The Freezer Compartment

The ******* symbol means that your freezer will store frozen food at -18°C (-0.4°F) or colder allowing for long term frozen food storage and freezing of fresh food. The freezer temperature is controlled automatically by the thermostat situated in the larder compartment.

Due to the different installations, methods of usage and weather conditions, adjustments to the temperature settings may be required.

These are best assessed against a temperature reading on a thermometer buried in the frozen food. The reading must be taken quickly as the thermometer temperature will rise rapidly after removal.

Frozen Food Storage

The appliance has the following net storage volume:

62 litres (2.18 cuft)
19.8kg (43.6 lb)†

† This is a standard measurement and the actual capacity depends upon the density and sizes of the food. The above figures are based on an average density of 0.32 kg per litre (20 lb per cuft).

Pre packed commercially frozen food should be stored in accordance with the manufacturer's instructions for a 4 star frozen food compartment and should be put in the freezer as soon as possible after purchase. Your freezer provides for long term storage which generally means up to 3 months but the length of the time can vary and it is important to follow the recommended times shown on packets of commercially frozen food.

Do not place sealed containers or carbonated liquids such as fizzy drinks into the freezer as it creates pressure on the container which may cause it to explode resulting to damage to the freezer.

Ice cubes and ice lollies should not be consumed immediately after removal from the freezer as it may result in low temperature skin abrasions.

Manufacturers storage times should be adhered to.

Freezing Fresh Food

The maximum quantity of food you can freeze in 24 hours is 4.5kg. Place the fresh food on the top freezer shelf. Food may need rearranging to achieve this.

Frozen food should not be refrozen once it has thawed out.

Do not remove items from the freezer if your hands are damp/wet, as this could cause skin abrasions or 'frost/freezer burns'.

Hints and Tips

- Any opened packets of frozen food, should be rewrapped in airtight materials to prevent surface evaporation which causes drying or 'freezer burn'.
- Frozen food which is allowed to thaw accidentally should either be used immediately or thrown away. Alternatively if the food is uncooked and has not been completely defrosted it can be cooked and then refrozen.
- Aim to check dates on packets and rotate food regularly. Although storage longer than recommended is not harmful, flavours and textures begin to change.

Download from Www.Somanuals.com. All Manuals Search And Download.

HINTS AND TIPS

Normal Operating Sounds

- You may hear faint gurgling or bubbling sounds when the refrigerant is pumped through the coils or tubing at the rear, to the cooling plate/evaporator or to the fixed freezer shelves.
- When the compressor is on, the refrigerant is being pumped round, and you will hear a whirring sound or pulsating noise from the compressor.
- A thermostat controls the compressor, and you will hear a faint 'click' when the thermostat cuts in and out.

Food Storage

- To obtain the best results from your appliance, neither hot foods nor liquids which may evaporate, should be placed in the larder compartment.
- Avoid buying frozen food if you cannot store it straight away. The use of an insulated container is advisable. When you arrive home place the frozen food in the freezer immediately.
- Keep the time between buying chilled food and placing it in your fridge as short as possible.
- Do not push food together too much, try to allow air to circulate around each item.
- Do not store food uncovered.
- Ensure that food placed in the freezer is dated and labelled and used in date order to ensure that food is consumed at its best.
- Remove suspect food from your refrigerator and clean, refer to cleaning and maintenance.

Energy Saving Advice

- Do not install the appliance close to sources of heat, such as a cooker, dishwasher or radiator.
- Locate the appliance in a cool well ventilated room and make sure that the air openings of the cabinet are not obstructed.
- Avoid unnecessary frosting in the cabinet by packing all foodstuffs into airtight packages before placing them in the freezer.
- Always leave warm food to cool down to room temperature before placing in the fridge or freezer.
- Food which is to be frozen (when cool) should be placed in the fridge before being transferred to the freezer.
- Thaw frozen food in the fridge. This will ensure safer defrosting of foods and reduce the work of the refrigeration unit.
- Try to avoid keeping the door open for long periods, or opening the door too frequently as warm air will enter the cabinet, and cause the compressor to switch on unnecessarily often.
- Ensure there are no obstructions preventing the door from closing properly.
- It is advisable to periodically clean the refrigeration system at the back of the appliance with a duster or vacuum cleaner.

In the Event of a Power Failure

If there is a power failure during the storage of frozen foods, keep the door closed. If the temperature within your freezer should rise do not refreeze the food without checking it's condition. The following guidelines should assist you:

Ice Cream: Once thawed should be discarded.

Fruit and Vegetables: If soft should be cooked and used up.

Bread and Cakes: Can be refrozen without danger.

Shellfish: Should be refrigerated and used up quickly.

Cooked Dishes: i.e. casseroles, should be refrigerated and used up.

Large Pieces of Meat: Can be re-frozen providing there are ice crystals remaining within them.

Small Joints: Should be cooked and then re-frozen as cooked dishes.

Chicken: Should be cooked and re-frozen as a fresh dish.

Download from Www.Somanuals.com. All Manuals Search And Download.

MAINTENANCE AND CLEANING

Before any maintenance or cleaning work is carried out DISCONNECT the appliance from the ELECTRICITY supply

Internal Cleaning

Clean the inside and accessories with warm water and bicarbonate of soda (5ml to 0.5 litre of water). Rinse and dry thoroughly.

Do not use detergents, abrasive powers, highly perfumed cleaning products, wax polishes or cleaning products containing bleach or alcohol.

Clean the drain hole of the water trough at regular intervals and ensure that the drain hole is clear at all times. If blocked carefully clear using a piece of flexible curtain wire inserted into the drain outlet to remove the blockage.

Regularly check the door seals and wipe clean to ensure they are clean and free from debris.

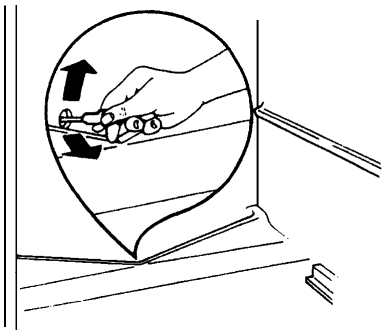

External Cleaning

Wash the outer cabinet with warm soapy water.

Do NOT use abrasive products.

There are sharp edges on the underside of the product so care should be taken when cleaning.

Once or twice a year dust the condenser (black grille) and the compressor at the back of the appliance, with a brush or vacuum cleaner, as an accumulation of dust will affect the performance of the appliance and cause excessive electricity consumption.

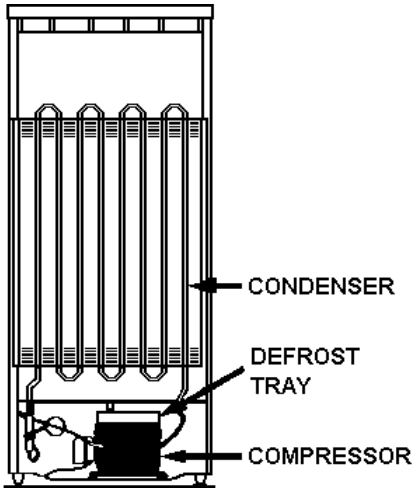

☞ To Change the Light Bulb

1. Switch off the appliance and disconnect from the electricity supply.
2. Remove the light cover by removing the screw at the rear with a screwdriver.
3. Pull the rear of the cover outwards towards the middle of the cabinet.
4. Unscrew the bulb and replace it with a new 15 watt E14 SES bulb (available from your local Service Force Centre).
5. Replace the cover by engaging its front edges in the recess of the light housing.
6. Push in the rear towards the side of the cabinet and replace the screw.

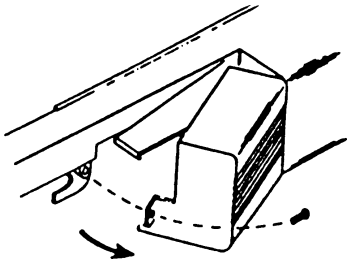

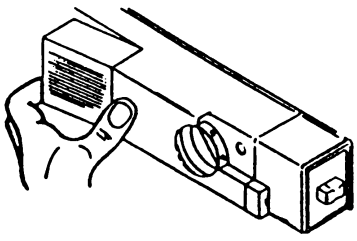

Download from Www.Somanuals.com. All Manuals Search And Download.

Defrosting Your Appliance

The fridge compartment is defrosted automatically. Defrost water from the cooling plate runs out of the drain and onto a tray on the motor compressor where it is evaporated. This process is completely automatic. Droplets of water on the cooling plate during defrosting are quite normal and will freeze on the plate afterwards.

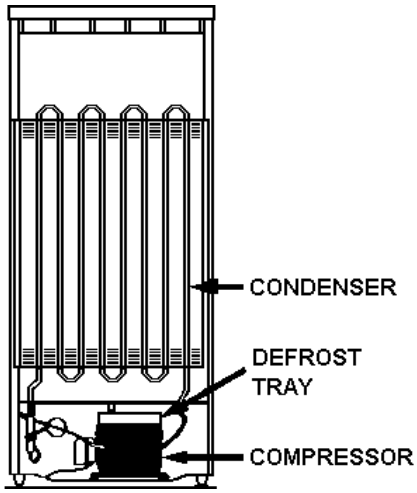

In the freezer compartment, frost accumulates on the refrigerated shelves during normal operation.

Defrosting should be carried out when the frost build up is approximately 6mm (¼") thick.

☞ To Defrost the Freezer

1. Wrap any food in layers of newspaper or blankets.
2. Switch the appliance off at the wall socket and remove the plug.
3. Remove the bottom shelf in the freezer.
4. Remove the plug from the drain-hole (in the top of the refrigerator) by pulling downwards.
5. Place a container under the drain hole.
6. After defrosting, clean and dry the interior, and replace the plastic plug.
7. Switch the appliance on and replace any frozen food.

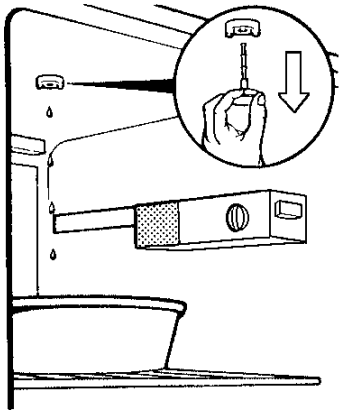

i

- Defrosting can be speeded up by putting bowls of hot (not boiling) water in the freezer and loosening the frost with a suitable plastic scraper.
- If the temperature of frozen food is allowed to rise during defrosting, its storage life may be shortened.

When the Appliance is Not in Use

When the appliance is not in use for long periods, disconnect from the electricity supply, empty all of the food and clean the appliance, leaving the door ajar to prevent unpleasant smells.

Download from Www.Somanuals.com. All Manuals Search And Download.

WHAT HAPPENS IF SOMETHING GOES WRONG

BEFORE contacting your local service force centre, check the following points:

Symptom	Solution
No power to the appliance	Check there is power at the socket.
	Check there is not a power cut by checking the household lights.
	Check the fuse has not blown.
The light does not come on	Ensure that the bulb is correctly fitted.
	Replace the bulb if it has blown.
	Check the door light switch is not jammed.
The temperature in the fridge or freezer section is too high	Check the thermostat in the fridge is turned to the correct setting relative to ambient conditions.
	Check the ambient temperature is within the appliances operating limits of 10°C to 32°C. Relocate the appliance if necessary.
The freezer door will not open	Has door just been opened? If so leave for a few minutes to allow the air pressure to equalise.
The compressor runs continuously	Adjust the thermostat to give correct temperature control. See page 6.
	Check that the doors are closed.
	Large quantities of food have recently been placed in the cabinet / and or door is frequently opened.
	Check that air ventilation is not obstructed.
Excessive frost and ice has built up	Ensure the doors are not left open.
	Check that nothing is preventing the doors from closing.
	Is the door gasket intact and clean.
	Has advised periodic defrosting been carried out.
Noise	Refer to normal operating sounds.
Water under the salad bins	Check the drain hole is not blocked. (see Maintenance and Cleaning).

If after the above checks there is still a fault call your local Service Force Centre.

In-guarantee customers should ensure that the above checks have been made as the engineer will make a charge if the fault is not a mechanical or electrical breakdown.

Please note that proof of purchase is required for in-guarantee service calls.

Download from Www.Somanuals.com. All Manuals Search And Download.

Service and Spare Parts

If you require service or spare parts please contact your local Service Centre by telephoning:

0990 929929

The address of your local centre can be found on the following pages; and also in your local telephone directory.

Before contacting your local Service Force Centre make a note of the model and serial number, together with date of purchase. The service department will require this information.

The model and serial number can be found on the rating plate situated inside the cabinet.

Download from Www.Somanuals.com. All Manuals Search And Download.

To contact your local Tricity Bendix Service Centre telephone 0990 929929

CHANNEL ISLANDS

GUERNSEY	Guernsey Electricity PO Box 4 Vale , Guernsey Channel Islands
JERSEY	Jersey Electricity Company PO Box 45 Queens Road St Helier Jersey Channel Islands JE4 8NY

SCOTLAND

ABERDEEN (M05)	8 Cornhill Arcade Cornhill Drive Aberdeen AB2 5UT
AUCHTERMUCHY (M03)	33A Burnside Auchtermuchy Fife KY14 7AJ
BLANTYRE (M07)	Unit 5 Block 2 Auchenraith Ind Estate Rosendale Way Blantyre G72 0NJ
DUMFRIES (M01)	93 Irish Street Dumfries Scotland DG1 2PQ
DUNOON (M67)	Briar Hill 7 Hill Street, Dunoon Argyll PA23 7AL
GLASGOW (M04)	20 Cunningham Road Clyde Estate Rutherglen, Glasgow, G73 1PP
INVERNESS (M06)	Unit 3B Smithton Indust. Est. Smithton Inverness IV1 AJ
ISLE OF ARRAN (OWN SALES)	Arran Domestics Unit 4 The Douglas Centre Brodick Isle of Arran KA27 8AJ
ISLE OF BARRA (OWN SALES)	J Zerfah 244 Bruernish Isle of Barra Western Islands HS9 5QY
ISLE OF BUTE (M66)	Walker Engineering Glenmhor Upper Serpentine Road Rothesay Isle of Bute PA20 9EH
ISLE OF LEWIS (M69)	ND Macleod 16 James Street Stornoway Isle of Lewis PA87 2QW
KELSO (M08)	2-8 Wood Market Kelso Borders TD5 7AX
ORKNEY (M65)	Corsie Domestics 7 King Street Kirkwall Orkney KW15
SHETLAND (OWN SALES)	Tait Electronic Systems Ltd. Holmsgarth Road Lerwick Shetland ZE1 0PW
SHETLAND (OWN SALES)	Bolts Shetland Ltd 26 North Road Lerwick Shetland ZE1 0PE
WHALSAY (OWN SALES)	Leask Electrical Harlsdale Symbister, Whalsay Shetland ZE2 9AA

NORTHERN IRELAND

BELFAST (M27)	Owenmore House Kilwee Industrial Estate Upper Dunmury Lane Belfast BT17 0HD

WALES

CARDIFF (M28)	Guardian Industrial Estate Clydesmuir Road Tremorfa, Cardiff CF2 2QS
CLYWD (M14)	Unit 6-7 Coed - Parc Abergele Road Rhuddlan Clwyd Wales LL18 5UG
OSWESTRY (M17)	Plas Ffynnon Warehouse Middleton Road Oswestry SY11 2PP
HAVERFORDWEST (M75)	Cromlech Lodge Amerlston Haverfordwest SA62 5DS

NORTH EAST

GATESHEAD (M39)	Unit 356a Dukesway Court Dukesway Team Valley Gateshead NE11 0BH
GRIMSBY (M42)	Unit 2 Cromwell Road Grimsby South Humberside DN31 2BN
HULL (M41)	Unit 1 Boulevard Industrial Estate Hull HU3 4AY
LEEDS (M37)	64-66 Cross Gates Road Leeds LS15 7NN
NEWTON AYCLIFFE (M45)	Unit 16 Gurney Way Aycliffe Ind Estate Newton Aycliffe DL5 6UJ
SHEFFIELD (M38)	Pennine House Roman Ridge Ind. Roman Ridge Road Sheffield S9 1GB

NORTH WEST

BIRKENHEAD (M11)	1 Kelvin Park Dock Road Birkenhead L41 1LT
CARLISLE (M10)	Unit 8 South John Street Carlisle CA2 5AJ
ISLE OF MAN (M64)	South Quay Ind Estate Douglas Isle of Man
LIVERPOOL (M15)	Unit 1 Honeys Green Precinct Honeys Green Lane Liverpool L12 9JH
MANCHESTER (M09)	Unit 30, Oakhill Trading Estate Devonshire Road Worsley Manchester M28 3PT
PRESTON (M13)	Unit 250 Dawson Place Walton Summit Bamber Bridge Preston Lancashire PR5 8AL
STOCKPORT (M16)	Unit 20 Haigh Park Haigh Avenue Stockport SK4 1QR

Download from Www.Somanuals.com. All Manuals Search And Download.

TRICITY BENDIX SERVICE FORCE

To contact your local Tricity Bendix Service Centre telephone 0990 929929

MIDLANDS

BIRMINGHAM (M18)	66 Birch Road East, Wyrley Road Industrial Estate Witton Birmingham B6 7DB
BOURNE (M44)	Manning Road Ind Estate Pinfold Road Bourne PE10 9HT
BRIDGNORTH (M72)	1 Underhill Street Bridgnorth Salop WV16 4BB
GLOUCESTER (M23)	101 Rycroft Street Gloucester GL1 4NB
HEREFORD (M31)	Unit 3 Bank Buildings Cattle Market Hereford HE4 9HX
HIGHAM FERRERS (M51)	The Old Barn Westfield Terrace Higham Ferrers NN10 8BB
ILKESTON (M43)	Unit 2 Furnace Road Ilkeston DE7 5EP
LEICESTER (M22)	Unit 7 Oaks Industrial Estate Coventry Road Narborough Leicestershire LE9 5GF
LINCOLN (M40)	Unit 8 Stonefield Park Clifton Street Lincoln LN5 8AA
NEWCASTLE UNDER LYME (M12)	18-21 Croft Road Brampton Industrial Estate Newcastle under Lyme Staffordshire ST5 0TW
NUNEATON (M21)	19 Ptarmigan Place Townsend Drive Nuneaton CV11 6RX
REDDITCH (M20)	Heming Road Washford Redditch Worcestershire B98 0DH
TAMWORTH (M19)	Unit 3 Sterling Park Claymore Tamworth B77 5DO
WORCESTER (M73)	Unit 1 Northbrook Close Gregorys Mill Ind Estate Worcester WR3 8BP

LONDON & EAST ANGLIA

CHELMSFORD (M47)	Hanbury Road Widford Ind Estate Chelmsford Essex CM12 3AE
COLINDALE (M53)	Unit 14 Capitol Park Capitol Way Colindale London NW9 0EQ
ENFIELD (M49)	284 Alma Road Enfield London EN3 7BB
GRAVESEND (M57)	Unit B4, Imperial Business Estate Gravesend Kent DA11 0DL
HARPENDEN (M46)	Unit 4 Riverside Estate Coldharbour Lane Harpenden AL5 4UN
LETCHWORTH (M50)	16-17 Woodside Ind Est. Works Road Letchworth Herts SG6 1LA
MAIDENHEAD (M60)	Reform Road Maidenhead Berkshire SL6 8BY
MOLESEY (M61)	10 Island Farm Avenue West Molesey Surrey KT8 2UZ
NEWBURY (M24)	PO Box 5627 Newbury Berkshire RG14 5GF
IPSWICH (M48)	Unit 2B Elton Park Business Centre Hadleigh Road Ipswich IP2 0DD
NORWICH (M52)	2b Trafalgar Street Norwich NR1 3HN
SUNBURY (M63)	Unit 1a The Summit Hanworth Road Hanworth Ind Estate Sunbury on Thames TW16 5D
SYDENHAM (M62)	Unit 6 Metro Centre Kangley Bridge Road Sydenham SE26
WEST DRAYTON (M76)	2 / 4 Royal Lane Yiewsley West Drayton Middlesex UB7 8DL

SOUTH EAST

ASHFORD (M58)	Unit 2 Bridge Road Business Estate Bridge Road Ashford Kent TN2 1BB
FLEET (M59)	Unit 1 Redfields Industrial Estate Church Crookham Fleet Hampshire GU13 0RD
HAYWARDS HEATH (M55)	21-25 Bridge Road Haywards Heath Sussex RH16 1UA
TONBRIDGE (M56)	Unit 30 Deacon Trading Estate Morley Road Tonbridge Kent TN9 1RA

SOUTH WEST

BARNSTAPLE (M30)	P.O. Box 12 Barnstaple North Devon EX31 2YB
BOURNEMOUTH (M26)	63-65 Curzon Road Bournemouth Dorset BH1 4PW
BRIDGEWATER (M35)	6 Hamp Industrial Estate Bridgewater Somerset TA6 3NT
BRISTOL (M25)	11 Eldon Way Eldonwall Trading Bristol Avon BS4 3QQ
EMSWORTH (M33)	266 Main Road Southbourne Emsworth PO10 8JL
ISLE OF WIGHT (M34)	Unit 8 Enterprise Court Ryde Business Park Ryde Isle of Wight PO33 1DB
NEWTON ABBOT (M29)	Unit 2 Zealley Industrial Estate Kingsteignton Newton Abbot S. Devon TQ12 3TD
PLYMOUTH (M32))	16 Faraday Mill Cattledown Plymouth PL4 0ST
REDRUTH (M36)	Unit 7D Pool Industrial Estate Wilson Way, Redruth, Cornwall TR15 3QW

Download from Www.Somanuals.com. All Manuals Search And Download.

INSTALLATION INSTRUCTIONS

Technical Information

DIMENSIONS

HEIGHT:	138cm (54.4")	
WIDTH:	49.5cm (19.5")	
DEPTH:	61.5cm (24.2")	

CAPACITY

GROSS:	Fridge:	122.4 litres
	Freezer:	77 litres
NET:	Fridge:	118.0 litres
	Freezer:	62 litres

STAR RATING:	✳***
POWER ABSORBED:	110W
VOLTAGE:	230 - 240V
FREQUENCY:	50Hz
AVERAGE DAILY UNITS OF ELECTRICITY:	1.49Kwh *

* THIS FIGURE IS BASED ON STANDARD TEST RESULTS IN THE EUROPEAN STANDARD EN153. ACTUAL CONSUMPTION WILL DEPEND ON HOW THE APPLIANCE IS USED AND WHERE IT IS LOCATED.

CE

This appliance complies with the following E.E.C Directives:
73/23 EEC of 19.2.73 (Low Voltage Directive) and subsequent modifications;
89/336 EEC of 3.5.89 (Electromagnetic Compatibility Directive) and subsequent modifications.

⚠ It is dangerous to alter the specifications or attempt to modify this product in any way.

Download from Www.Somanuals.com. All Manuals Search And Download.

Electrical Connections

Any electrical work required to install this appliance should be carried out by a qualified electrician or competent person.

This appliance must be earthed.

The manufacturer declines any liability should these safety measures not be observed.

Electrical Requirements

Before switching on, make sure the electricity supply voltage is the same as that indicated on the appliance rating plate.

The appliance is supplied with a 13 amp plug fitted. In the event of having to change the fuse in the plug supplied, a 13 amp ASTA approved (BS1362) fuse must be used.

Should the plug need to be replaced for any reason. The wires in the mains lead are coloured in accordance with the following code:

Green and Yellow	: Earth
Blue	: Neutral
Brown	: Live

The wire coloured green and yellow must be connected to the terminal marked with the letter "E" or by the earth symbol ⏚ or coloured green and yellow.

The wire coloured blue must be connected to the terminal marked "N" or coloured black.

The wire coloured brown must be connected to the terminal marked "L" or coloured red.

Upon completion there must be no cut, or stray strands of wire present and the cord clamp must be secure over the outer sheath.

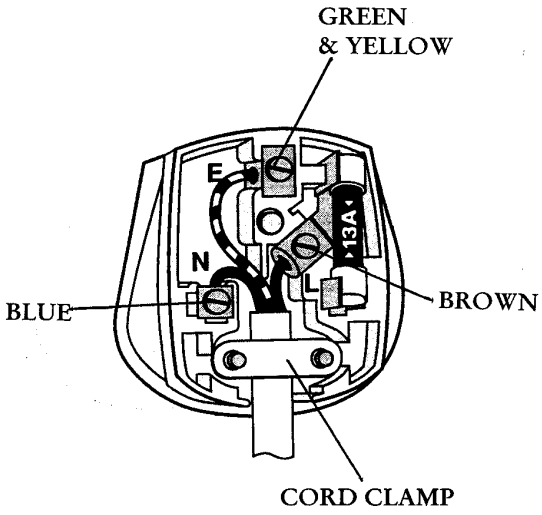

Download from Www.Somanuals.com. All Manuals Search And Download.

Installation Requirements

To ensure correct operation this appliance must not be located where the temperatures will fall below 10°C (50°F) or rise above 32°C (90°F).

Avoid the following locations: unheated kitchen, outhouse, conservatory, garage.

For correct operation this appliance must be installed:

- In a dry atmosphere.
- Out of direct sunlight.
- Away from extreme temperature (not next to a cooker or other sources of heat).
- Your appliance will be heavy when loaded with food and must therefore be stood on a strong firm floor.

Ventilation Requirements

- Gently push into place until the top panel rear ventilation grille touches against the wall.
- When in position a 50 mm (2") clear space above the appliance should be maintained.
- If space above the appliance is not available, clearance of 25mm (1") should be maintained on both sides.

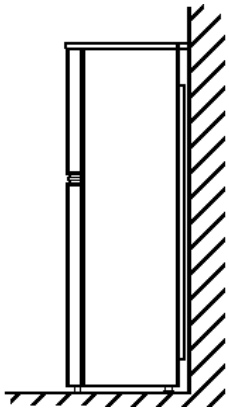

Ensure that the appliance does not stand on the electrical supply cable.

Parts which heat up should not be exposed. Whenever possible , the back of the appliance should be close to a wall but leaving the required distance for ventilation.

Levelling

The appliance should be level, to eliminate rocking:

- Ensure the appliance is upright and both adjusters are in firm contact with the floor so that the cabinet is level.
- Adjust the level by screwing out the appropriate level adjuster at the front, (use your fingers or a suitable spanner.



This appliance is heavy. Care should be taken when moving it.

Download from Www.Somanuals.com. All Manuals Search And Download.

☞ Door Reversal

1. Disconnect the appliance from the electricity supply.

2. Remove all loose items, including food. Store food in a cool place.

3. Make sure a towel or cloth is at the base of the product to prevent it from slipping.

4. Carefully lean the appliance backwards, resting the top on a stool, or something similar, at least 30cm (12") from the floor.

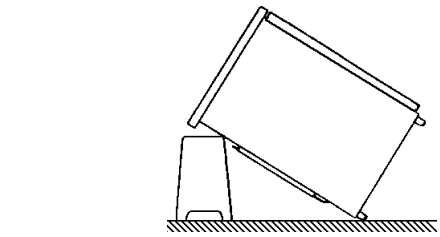

⚠ *Do not support the appliance on the rear ventilation grille or condenser.*

5. Remove level adjuster (A) from base of product retaining small cup spacer which is located around the threaded portion of the adjuster.

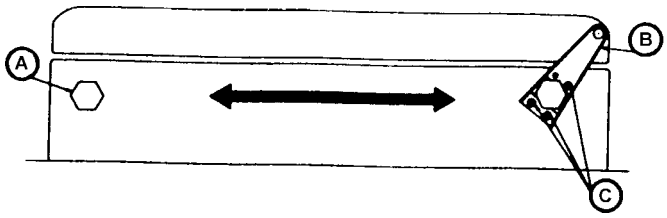

6. Remove the foot / hinge assembly (B) by removing screws marked (C).

7. Remove the bottom door by lifting it upwards slightly and carefully sliding it down off the centre hinge pin (H).

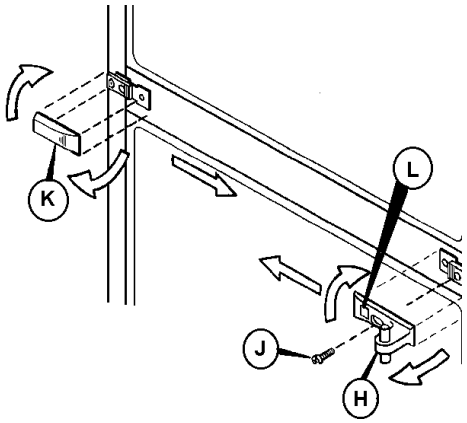

8. Remove the centre hinge (H) by taking out the fixing screw (J) pull the hinge (H) down out of the top door being careful to retain the blanking plug (L) in the front face of the hinge.

9. Remove the top door by carefully sliding it down off the upper hinge pin (F).

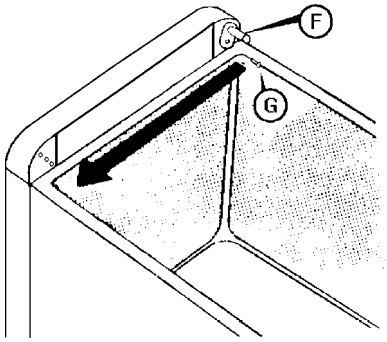

10. Unscrew the upper hinge pin (F) by removing screw (G) and transfer it to the opposite side of the cabinet.

11. Using a flat bladed screwdriver remove the blanking cover (K). Refit cover by clipping it back on the opposite side.

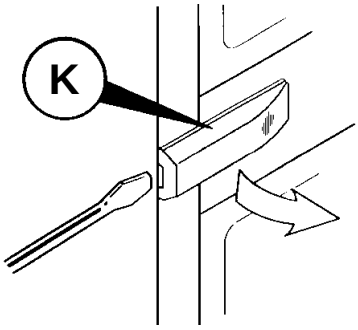

Download from Www.Somanuals.com. All Manuals Search And Download.

12. Refit the top door by carefully sliding it onto the upper hinge pin (F).

13. Turn the centre hinge (L) around from its illustrated position and transfer it to the opposite side.

14. Gently press the centre hinge up into the door.

15. Secure the centre hinge to the cabinet, refit screw secure (J). Ensure the top door is correctly aligned before fully tightening the screw. This can be achieved by sideways movement of the centre hinge.

16. Refit the bottom door by sliding it onto the centre hinge pin.

17. Take the bottom hinge foot assembly (B) and transfer it over to the opposite side of the cabinet, being careful to retain any spacer washers fitted onto the bottom hinge pin. Push the hinge foot assembly (B) into the door bearing using the pin of the foot for location. Three holes will then line up with the hinge foot and screws (C) should be used to secure the hinge.

18. Refit level adjuster and spacer (A) in the opposite side of the cabinet.

19. Stand the appliance upright.

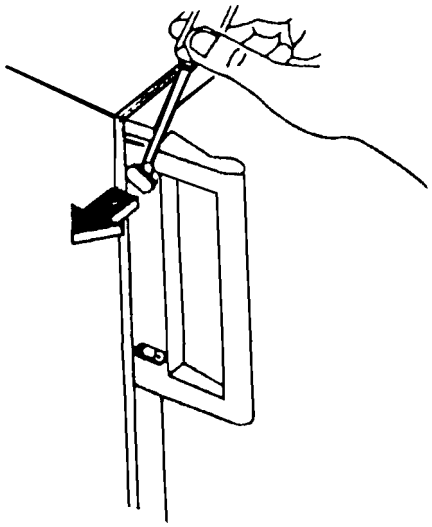

Side Fixed Handle Change

If your appliance is fitted with a side fixed handle:

To fix the handle on the opposite side proceed as follows:

i) Protect the paintwork on the door from damage with masking tape or other suitable material while using a blunt knife or similar instrument to carefully prise out the plastic plugs from alternative handle positions on the opposite side of the door.

ii) Remove the screw covers and screws from the handle and transfer it to its new position replacing the plastic plugs into the vacated screw holes.

Download from Www.Somanuals.com. All Manuals Search And Download.

GUARANTEE CONDITIONS

Standard guarantee conditions

We, Tricity Bendix, undertake that if within 12 months of the date of the purchase this Tricity Bendix appliance or any part thereof is proved to be defective by reason only of faulty workmanship or materials, we will, at our option repair or replace the same FREE OF CHARGE for labour, materials or carriage on condition that:

- The appliance has been correctly installed and used only on the electricity supply stated on the rating plate.
- The appliance has been used for normal domestic purposes only, and in accordance with the manufacturer's instructions.
- The appliance has not been serviced, maintained, repaired, taken apart or tampered with by any person not authorised by us.
- All service work under this guarantee must be undertaken by a Tricity Bendix service centre.
- Any appliance or defective part replaced shall become the Company's property.
- This guarantee is in addition to your statutory and other legal rights.
  Home visits are made between **8.30am** and **5.30pm** Monday to Friday. Visits may be available outside these hours in which case a **premium** will be charged.

Exclusions

This guarantee does not cover:

- Damage or calls resulting from transportation, improper use or neglect, the replacement of any light bulbs or removable parts of glass or plastic.
- Costs incurred for calls to put right an appliance which is improperly installed or calls to appliances outside the United Kingdom.
- Appliances found to be in use within a commercial environment, plus those which are subject to rental agreements.
- Products of Tricity Bendix manufacture which are not marketed by Ticity Bendix.

European Guarantee

If you should move to another country within Europe then your guarantee moves with you to your new home subject to the following qualifications:

- The guarantee starts from the date you first purchased your product.
- The guarantee is for the same period and to the same extent for labour and parts as exists in the new country of use for this brand or range of products.
- This guarantee relates to you and cannot be transferred to another user.
- Your new home is within the European Community (EC) or European Free Trade Area.
- The product is installed and used in accordance with our instructions and is only used domestically, i.e. a normal household.
- The product is installed taking into account regulations in your new country.

Before you move please contact your nearest Customer Care centre, listed below, to give them details of your new home. They will then ensure that the local Service Organisation is aware of your move and able to look after you and your appliances.

France	Senlis	+33 (0)3 44 62 28 28
Germany	Nürnberg	+49 (0)911 323 260
Italy	Pordenone	+39 (0)1678 47053
Sweden	Stockholm	+46 (0)20 78 77 50
UK	Newbury	+44 (0)1635 525 542

Download from Www.Somanuals.com. All Manuals Search And Download.

Download from Www.Somanuals.com. All Manuals Search And Download.

Download from Www.Somanuals.com. All Manuals Search And Download.

Download from Www.Somanuals.com. All Manuals Search And Download.

Free Manuals Download Website

http://myh66.com

http://usermanuals.us

http://www.somanuals.com

http://www.4manuals.cc

http://www.manual-lib.com

http://www.404manual.com

http://www.luxmanual.com

http://aubethermostatmanual.com

Golf course search by state

http://golfingnear.com

Email search by domain

http://emailbydomain.com

Auto manuals search

http://auto.somanuals.com

TV manuals search

http://tv.somanuals.com