Hisense

life reimagined

USER'S OPERATION MANUAL

Before operating this unit, please read this manual thoroughly, and retain for future reference

HRBF125
HRBF125S
HRBF125B

English

Contents

Safety and warning information.....2
Installing your new appliance.....8
Description of the appliance.....9
Controls.....9
Using your appliance.....10
Helpful hints and tips.....11
Cleaning and care.....12
Troubleshooting.....13
Disposal of the appliance.....14

Safety and warning information

For your safety and correct usage, before installing and first using the appliance, read this user manual carefully, including its hints and warnings. To avoid unnecessary mistakes and accidents, it is important to make sure that all people using the appliance are thoroughly familiar with its operation and safety features. Save these instructions and be sure that they remain with the appliance if it is moved or sold, so that anyone using it throughout its life, will be properly informed on its usage and safety notices.
For the safety of life and property, keep the precautions of these user's instructions as the manufacturer is not responsible for damages caused by omission.

Safety for children and otherswho are vulnerable people

- According to EN standard
  This appliance can be used by children aged from 8 years and above and persons with reduced physical, sensory or mental capabilities or lack of experience and knowledge if they have been given supervision or instruction concerning use of the appliance in a safe way and understand the hazards involved. Children shall not play with the appliance. Cleaning and user maintenance shall not be made by children without supervision.
  According to IEC standard
  This appliance is not intended for use by persons (including children) with reduced physical, sensory or mental capabilities, or lack of experience and knowledge, unless they have been given supervision or instruction concerning use of the appliance by a person responsible for their safety.

- Keep all packaging away from children as there is risk of suffocation.
- If you are discarding the appliance, pull the plug out of the socket, cut the connection cable (as close to the appliance as you can) and remove the door to prevent children playing from suffering an electric shock or from closing themselves inside it.
- If this appliance, featuring a magnetic door seals, is to replace an older appliance having a spring lock (latch) on the door or lid, be sure to make the spring lock unusable before you discard the old appliance. This will prevent it from becoming a death trap for a child.

General safety



- WARNING —This appliance is intended to be used in household and similar applications such as
  -staff kitchen areas in shops, offices and other working environments;
  -farm houses and by clients in hotels, motels and other residential type environments;
  -bed and breakfast type environments;
  -catering and similar non-retail applications.
- WARNING — Do not store explosive substances such as aerosol cans with a flammable propellant in this appliance.
- WARNING — If the supply cord is damaged, it must be replaced by the manufacturer, its service agent or similarly qualified persons in order to avoid a hazard.
- WARNING — Keep ventilation openings, in the appliance enclosure or in the built-in structure, clear of obstruction.
- WARNING — Do not use mechanical devices or other means to accelerate the defrosting process, other than those recommended by the manufacturer.
- WARNING — Do not damage the refrigerant circuit.
- WARNING — Do not use electrical appliances inside the food storage compartments of the appliance, unless they are of the type recommended by the manufacturer.

- WARNING — The refrigerant and insulation blowing gas are flammable. When disposing of the appliance, do so only at an authorized waste disposal centre. Do not expose to flame.
- WARNING —When positioning the appliance, ensure the supply cord is not trapped or damaged.
- WARNING —Do not locate multiple portable socket-outlets or portable power supplies at the rear of the appliance.

Replacing the illuminating lamps

- WARNING—The illuminating lamps must not be replaced by the user! If the illuminating lamps is damaged, contact the customer helpline for assistance.

This warning is only for refrigerators that contain illuminating lamps.

Refrigerant

The refrigerant isobutene (R600a) is contained within the refrigerant circuit of the appliance, a natural gas with a high level of environmental compatibility, which is nevertheless flammable. During transportation and installation of the appliance, ensure that none of the components of the refrigerant circuit becomes damaged.
The refrigerant (R600a) is flammable.

Service Note

This appliance employs Hydrocarbon Refrigerant type R600a.It is hazardous for anyone other than an Authorized Service Person to service this appliance.In Queensland the Authorized Service Person MUST hold a Gas Work Authorization for hydrocarbon refrigerants to carry out servicing or repairs which involve removal of covers.

- WARNING — Refrigerators contain refrigerant andgases in the insulation. Refrigerant and gases must be disposed of professionally as they may cause eye injuries or ignition. Ensure that tubing of the refrigerant circuit is not damage prior to proper disposal.



WARNING: **Risk of fire / flammable materials**

If the refrigerant circuit should be damaged:

-Avoid opening flames and sources of ignition.
-Thoroughly ventilate the room in which the appliance is situated.

It is dangerous to alter the specifications or modify this product in any way.
Any damage to the cord may cause a shortcircuit, fire, and/or electric shock.



Electrical safety

1.The power cord must not be lengthened.
2. Make sure that the power plug is not crushed or damaged. A crushed or damaged power plug may overheat and cause a fire.
3. Make sure that you can access the main plug of the appliance.
4. Do not pull the main cable.
5. If the power plug socket is loose, do not insert the power plug. There is a risk of electric shock or fire.
6.You must not operate the appliance without the interior lighting lamp cover.
7.The fridge is only applied with power supply of single phase alternating current of 220~240V/50Hz. If fluctuation of voltage in the district of user is so large that the voltage exceeds the above scope, for safety sake, be sure to apply A.C. Automatic voltage regulator of more than 350W to the fridge. The fridge must employ a special power socket instead of common one with other electric appliances. Its plug must match the socket with ground wire.

Daily use

- Do not store flammable gass or liquids in the appliance, There is a risk of an explosion.
- Do not operate any electrical appliances in the appliance (e.g.electric ice cream makers,mixers etc.).
- When unplugging always pull the plug from the mains socket,do not pull on the cable.
- Do not place hot items near the plastic components of this appliance.

- Do not place food products directly against the air outlet on the rear wall.
- The appliances manufactures storage recommendations should be strictly adhered to.Refer to relrelevant instructions for storage.
- Frozen food can cause frost burns if consumed straight from the chill compartment.
- Do not place the appliance in direct sunlight.
- Keep buring candles,lamps and other items with naked flames away from the appliance so that do not set the appliance on fire.
- The appliance is intended for keeping food stuff and/or beverages in normal household as explained in this instruction booklet The appliance is heavy.Care should be taken when moving it.
- Do not remove nor touch items from the chill compartment if your hands are damp/wet,as this could cause skin abrasions or frost/freezer burns.
- Never use the base,drawers, doors etc. to stand on or as supports.
- Do not consume ice popsicles or ice cubes straight from the chill compartment as this can cause freezer burn to the mouth and lips.
- To avoid items falling and causing injury or damage to the appliance, do not overload the door racks or put too much food in the crisper drawers.

caution!

- Before maintenance, switch off the appliance and disconnect the mains plug from the mains socket.
  Do not clean the appliance with metal objects, steam

- Do not clean the appliance with metal objects, steam cleaner, ethereal oils, organic solvents or abrasive cleansers.
- Do not use sharp objects to remove frost from the appliance. Use a plastic scraper.

Installation Important!

- For electrical connection carefully, follow the instructions given in this manual.
  Unpack the appliance and check if there are damages on it.
- Do not connect the appliance if it is damaged. Report possible damages immediately to the place you bought it. In this case retain packing.
- It is advisable to wait at least four hours before connecting the appliance to allow the oil to flow back in the compressor.
- Adequate air circulation should be around the appliance, lacking this leads to overheating. To achieve sufficient ventilation, follow the instructions relevant to installation.
- Wherever possible the back of the product should not be too close to a wall to avoid touching or catching warm parts (compressor, condenser) to prevent the risk of a fire, follow the instructions relevant to installation.
- The appliance must not be locate close to radiators or cookers.
- Make sure that the mains plug is accessible after the installation of the appliance.

Service

- Any electrical work required to do the servicing of the appliance should be carried out by qualified electrician or competent person.
- This product must be serviced by an authorized Service Center, and only genuine spare parts must be used.
  1)If the appliance is Frost Free.
  2)If the appliance contains freezer compartment.

Note: Children aged from 3 to 8 years are allowed to load and unload refrigerating appliances.(This clause applies only to the EU region.)

Installing your new appliance

Before using the appliance for the first time, you should be informed of the following tips.

Ventilation of appliance

In order to improve efficiency of the cooling system and save energy, it is necessary to maintain good ventilation around the appliance for the dissipation of heat. For this reason, sufficient clear space should be available around the refrigerator.

Suggest :It is advisable for there to be 50 mm of space from the back to the wall, at least 100mm from its top, at least 50 mm from its side to the wall and a clear space in front to allow the doors to open 180°. As shown in above diagrams.

Note:

- This appliance performs well within the climate class from SN to T showed in the table below. It may not work properly if being left at a temperature above or below the indicated range for a long period.

Climate class	Ambient temperature
SN	+10°C to +32°C
N	+16°C to +32°C
ST	+16°C to +38°C
T	+16°C to +43°C

- Stand your appliance in a dry place to avoid high moisture.
- Keep the appliance out of direct sunlight, rain or frost. Stand the appliance away from heat sources such as stoves, fires or heaters.
- For sufficient leveling and air circulating in the lower rear section of the appliance, the bottom feet may need to be adjusted.
- To allow the doors to self-close,tilt the top backwards by about 10mm.

Space required in use

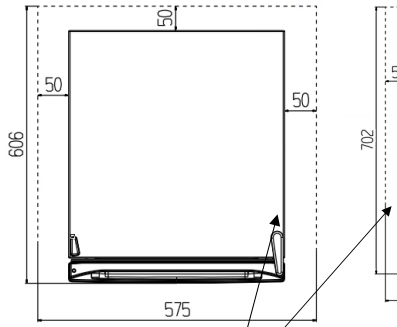

Overall space required in use

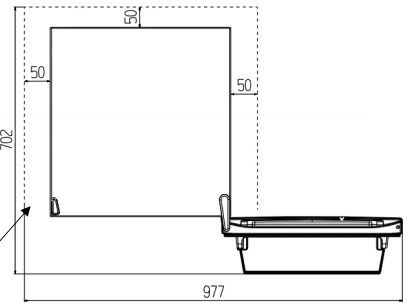

Space necessary for free circulation of air

Description of the appliance

View of the appliance

1. Screw hole
2. Chiller room cover
   (Chiller is not used as a freezer)
3. Roll-bond evaporator
4. Water drain tray
5. Temperature controller
6. Glass shelf
7. Cabinet
8. Fruit and vegetable crisper
9. Bottom feet
10. Upper hinge cover
11. Refrigerator door
12. Upper shelf
13. Middle shelf
14. Lower shelf
15. Gasket part

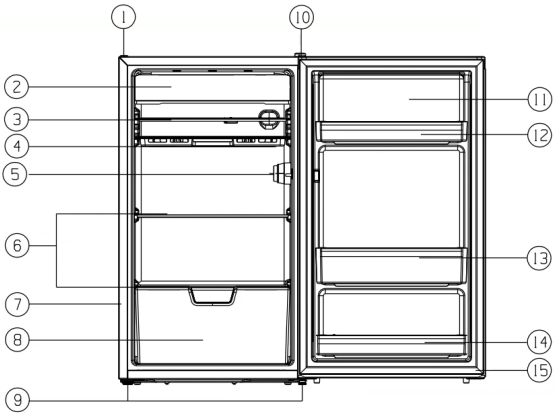

Note:Due to unceasing modification of our products,your refrigerator may be slightly different from this instruction manual,but its functions and using methods remain the same.

Controls

Insert the plug of the connection lead into an outlet with protective earth contact. The temperature selector knob is located on the right side of the fridge.

Temperature Control

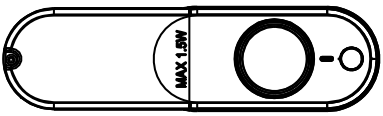

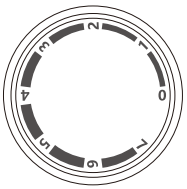

Thermostat knob

Starting up and temperature regulation

- Insert the plug of the connection lead into the plug socket with a protective grounding contact. When the refrigerator compartment door is opened, the internal lighting is switched on.
- The temperature selector knob is located on the RH side of the refrigerator compartment.

Setting “0” means: Off
Clockwise rotate the knob to turn on the appliance.

Setting “1” means:
Highest temperature, warmest setting.

Setting “7” means:
Setting “7” (end-stop) means: Lowest temperature, coldest setting.

IMPORTANT!

Normally we advise you select setting of 4, if you want the temperature warmer or colder please turn the knob to lower or higher setting accordingly. Though the unit is energy efficient, it is more efficient at lower position settings.

IMPORTANT!

High ambient temperatures (e.g. on hot summer days) and a cold setting on the temperature regulator e.g.position "7" , it can cause the compressor to run continuously or even non-stop! When the refrigerator is in use, the compressor needs t o be on and off normally to ensure its defrosting. Therefore, we should avoid setting the refrigerator's notch too high("7"'). If you find the refrigerator frosts too much, please set the refrigerator's notch lower.

Vacation Tips: if the appliance will not be used for several months:

- Remove all food. Unplug the power cord.
- Clean and dry thoroughly.
- Leave the door open slightly to prevent odour and mould growth .

Using your appliance

Door rack

- It is suitable for the canned liquid , bottled drinks and packed food, etc. Do not place too many heavy things in the racks.

Note: There are egg trays in the upper shelf.

Chiller compartment

- It is suitable for storing pre-frozen food, but it is not a freezer.

Note:

1. Don't store bottled or canned drinks (especially carbonated drinks) in this compartment. Bottles and cans may explode.
2. Keep the food in label bags or containers in order to keep the taste and nutrients.

Shelf in Refrigerator chamber

- There is one shelf in refrigerator chamber,and they can be taken out to be cleaned or get a larger space.



Crisper cover

- It is for controlling the temperature of the crisper and avoiding the vegetable losing moisture.

Fruit and vegetables crisper

- It is suitable for the storage of fruits and vegetable.

Helpful hints and tips

Energy saving tips

We recommend that you follow the tips below to save energy.

- Try to avoid keeping the door open for long periods in order to conserve energy. Ensure the appliance is away from any sources of heat (Direct sunlight, electric oven or cooker etc).
- Don't set the temperature colder than necessary.
- Don't store warm food or evaporating liquid in the appliance.
- Place the appliance in a well ventilated, humidity free, room. Please refer to Installing your new appliance chapter.
- If the diagram shows the correct combination for the drawers, crisper and shelves, do not adjust the combination as this is designed to be the most energy efficient configuration.

Hints for fresh food refrigeration

- Do not place hot food directly into the refrigerator , the internal temperature will increase resulting in the compressor having to work harder and will consume more energy.
- Do cover or wrap the food , particularly if it has a strong flavor.
- Place food properly so that air can circulate freely around it.

Hints for refrigeration

- Meat (All Types) Wrap in polythene food: wrap and place on the shelf above the vegetable drawer. Always follow food storage times and use by dates suggested by manufacturers.
- Cooked food, cold dishes, etc.:

They should be covered and may be placed on any shelf.

- Fruit and vegetables:

They should be stored in the special drawer provided.

- Butter and cheese:

Should be wrapped in airtight foil or plastic film wrap.

- Milk bottles:

Should have a lid and be stored in the door racks.

Switching off your appliance

If the appliance needs to be switched off for an extended period, the following steps should be taken preventing mould on the appliance.

1.Remove all the food.

2.Remove the power plug from the mains socket.

3. Clean and dry the interior thoroughly.

4. Ensure that all the doors are wedged open slightly to allow air to circulate.

Cleaning and care

For hygienic reasons the appliance (including exterior and interior accessories) should be cleaned regularly at least every two months.

Caution! The appliance must not be connected to the mains during cleaning. Danger of electrical shock! Before cleaning switch the appliance off and remove the plug from the mains socket.

Exterior cleaning

To maintain good appearance of your appliance, you should clean it regularly.

-Spray water onto the cleaning cloth instead of spraying directly on the surface of the appliance. This helps ensure an even distribution of moisture to the surface. –Clean the doors, handles and cabinet surfaces with a mild detergent and then wiped dry with a soft cloth.

Caution!

-Don't use sharp objects as they are likely to scratch the surface.

-Don't use Thinner, Car detergent, Clorox, ethereal oil, abrasive cleansers or organic solvent such as Benzene for cleaning. They may damage the surface of the appliance and may cause fire.

Interior cleaning

•You should clean the appliance interior regularly. It will be easier to clean when food stocks are low. Wipe the inside of the fridge freezer with a weak solution of bicarbonate of soda, and then rinse with warm water using a wrung-out sponge or cloth. Wipe completely dry before replacing the shelves and baskets. Thoroughly dry all surfaces and removable parts.

Caution! Don't use sharp objects to remove frost from the chill compartment. Only after the interior is completely dry should the appliance be switched back on and plugged back into the mains socket.

Door seals cleaning

Take care to keep door seals clean. Sticky food and drinks can cause seals to stick to the cabinet and tear when you open the door. Wash seal with a mild detergent and warm water. Rinse and dry it thoroughly after cleaning.

Caution! Only after the door seals are completely dry should the appliance be powered on.

Replaceing the lamp bulb(or LED):

Warning:The LED must not be replaced by the user! If the LED is damaged,contact the customer helpline for assistance.

Troubleshooting

If you experience a problem with your appliance or are concerned that the appliance is not functioning correctly, you can carry out some easy checks before calling for service, please see below.

Warning! Don't try to repair the appliance yourself. If the problem persists after you have made the checks mentioned below, contact a qualified electrician, authorized service engineer or the shop where you purchased the product.

Problem	Possible cause & Solution
Appliance is not working correctly	Check whether the power cord is plugged into the power outlet properly.
	Check the fuse or circuit of your power supply, replace if necessary.
	The ambient temperature is too low. Try setting the chamber temperature to a colder level to solve this problem.
Odours from the compartments	The interior may need to be cleaned.
	Some food, containers or wrapping cause odours.
Noise from the appliance	The sounds below are quite normal: •Compressor running noises. •Gurgling sound similar to water boiling. •Clicking noise before the compressor starts.
	Other unusual noises are due to the reasons below and may need you to check and take action: The cabinet is not level. The back of appliance touches the wall. Bottles or containers fallen or rolling.
The motor runs continuously	It is normal to frequently hear the sound of the motor, it will need to run more when in following circumstances: • Temperature setting is set colder than necessary. • Large quantity of warm food has recently been stored within the appliance. •The temperature outside the appliance is too high. •Doors are kept open too long or too often. •After your installing the appliance or it has been switched off for a long time.
A layer of frost occurs in the compartment	Check that the air outlets are not blocked by food and ensure food is placed within the appliance to allow sufficient ventilation. Ensure that door is fully closed. To remove the frost, please refer to defrosting chapter.
Temperature inside is too warm	You may have left the doors open too long or too frequently; or the doors are kept open by some obstacle; or the appliance is located with insufficient clearance at the sides, back and top.
Temperature inside is	Increase the temperature by following the "Controls" chapter.

too cold	
Doors can't be closed easily	Check whether the top of the refrigerator is tilted back by 10-15mm to allow the doors to self close, or if something inside is preventing the doors from closing.
The light is not working	The Lamp bulb (or LED) may be damaged. Refer to replace Lamp bulbs (or LED) in cleaning and care chapter
food in chill compartment is not freezering or staying frozen	chill compartment is not a freezering and is not designed to freeze food or keep food frozen.Do not attempt to freeze food in this compartment.

Disposal of the appliance

It is prohibited to dispose of this appliance as household waste.

Packaging materials

Packaging materials with the recycle symbol are recyclable. Dispose of the packaging into a suitable waste collection container to recycle it.

Before disposal of the appliance

1. Pull out the mains plug from the mains socket.
2. Cut off the power cord and discard with the mains plug

Warning! Refrigerators contain refrigerant and gases in the insulation. Refrigerant and gases must be disposed of professionally as they may cause eye injuries or ignition. Ensure that tubing of the refrigerant circuit is not damage prior to proper disposal.

	Correct Disposal of this product
	This symbol on the product or in its packing indicates that this product may not be treated as household waste. Instead, it should be taken to the appropriate waste collection point for the recycling of electrical and electronic equipment. By ensuring this product is disposed of correctly, you will help prevent potential negative consequences for the environment and human health, which could otherwise be caused by the inappropriate waste handling of this product. For more detailed information about the recycling of this product, please contact your local council your household waste disposal service, or the shop where you purchased the product.

To avoid contamination of food, please respect the following instructions
- Opening the door for long periods can cause a significant increase of the temperature in the compartments of the appliance.
- Clean regularly surfaces that can come in contact with food and accessible drainage systems.
- Store raw meat and fish in suitable containers in the refrigerator, so that it is not in contact with or drip onto other food.
- Two-star frozen-food compartments are suitable for storing pre-frozen food, storing or making icecream and making ice cubes.
- One-, two- and three-star compartments are not suitable for the freezing of fresh food.

Order	Compartments TYPE	Target storage temp.[℃]	Appropriate food
1	Fridge	≤+4	Eggs, cooked food, packaged food, fruits and vegetables, dairy products, cakes, Drinks and other foods which are not suitable for freezing.
2	Four-star	≤-18	Seafood (fish, shrimp, shellfish), freshwater aquatic products and meat products (recommended time is 3 months – nutrition values and taste decrease with time), suitable for freezing fresh food.
3	Three-star	≤-18	Seafood (fish, shrimp, shellfish), freshwater aquatic products and meat products (recommended time is 3 months – nutrition values and taste decrease with time). Not suitable for freezing fresh food.
4	Two-star	≤-12	Seafood (fish, shrimp, shellfish), freshwater aquatic products and meat products (recommended time is 2 months – nutrition values and taste decrease with time). Not suitable for freezing fresh food.
5	One-star	≤-6	Seafood (fish, shrimp, shellfish), freshwater aquatic products and meat products (recommended time is 1 month – nutrition values and taste decrease with time). Not suitable for freezing fresh food.
6	Zero-star	-6～0	Fresh pork, beef, fish, chicken, some packaged processed foods, etc. (Recommended to eat within the same day, preferably not later than 3 days) . Partially packed/wrapped up encapsulated processed foods (non-freezable foods)
7	Chill	-3～+3	Fresh/frozen pork, beef, chicken, freshwater aquatic products, etc.(7 days below 0 ℃ and above 0 ℃ is recommended for consumption within that day, preferably no more than 2 days). Seafood (less than 0 for 15 days, it is not recommended to store above 0 ℃)

8	Fresh Food	0～+4	Fresh pork, beef, fish, chicken, cooked food, etc. (Recommended to eat within the same day, preferably no more than 3 days)
9	Wine	+5～+20	red wine,white wine,sparkling wine etc.

Note: please store different foods according to the compartments or target storage temperature of your purchased products.

- If the refrigerating appliance is left empty for long periods, switch off, defrost, clean, dry, and leave the door open to prevent mould developing within the appliance.

Water dispenser cleaning (special for water dispenser products):

- Clean water tanks if they have not been used for 48 h; flush the water system connected to a water supply if water has not been drawn for 5 days.

WARNING! Food needs to be packed in bags before putting into the refrigerator, and liquids need to be packed in bottles or capped containers to avoid the problem that the product design structure is not easy to clean.

Hisense

life reimagined

4233516