TOSHIBA

Owner's Manual

REFRIGERATOR FREEZER

For Home Use Only

GR-RS682WE-PMT[06]



- Thank you very much for purchasing this Toshiba product.
- Read this Owner's Manual and become completely familiar with the product before use in order to use this product safely and correctly.
- Keep this Owner's Manual in a handy place for future reference.
- Make sure that you received your warranty.

CONTENTS

1. Safety warnings 1
1.1 Warning 1
1.2 Meaning of safety warning symbols 5
1.3 Electricity related warnings 5
1.4 Warnings for using 6
1.5 Warnings for placement 7
1.6 Warnings for energy 8
1.7 Warnings for disposal 8
2. Proper use of refrigerators 9
2.1 Placement 9
2.2 Leveling feet 10
2.3 Leveling door 11
2.4 Changing the Light 12
2.5 Starting 12
2.6 Energy saving tips 12
3. Structure and functions 13
3.1 Key components 13
3.2 Functions 14
4. Maintenance and care of the appliance 16
4.1 Overall cleaning 16
4.2 Cleaning of door tray、Fruits and vegetables box and drawer 17
4.3 Cleaning of Glass shelf 17
4.4 Defrosting 18
4.5 Out of operation 18
5. Trouble shooting 19
6. Disposal of your appliance 20
How to Use this Water Dispenser 21

1. Safety warnings

READ SAFETY PRECAUTIONS BEFORE INSTALLATION

To prevent injury to the user or other people and property damage, the following instructions must be followed. Incorrect operation due to ignoring of instructions may cause harm or damage.

1.1 Warning

⚠ WARNING



Warning:risk of fire / flammable materials

- WARNING: Risk of fire disaster and explosion
  The refrigerant of the appliance is flammable, please be care not to damange the cooling pipes during installation and transportation.if gas leakage happens, please contact the distributor or local service agent, and the following precautions should be always taken:
  1. Open the windows for ensuring good ventilation.
  2. No fire around and please do not use other electric appliance.
- This appliance is intended to be used in household and similar applications such as staff kitchen areas in shops, offices and other working environments; farm houses and by clients in hotels, motels and other residential type environments; bed and breakfast type environments; catering and similar non-retail applications.
- Children should be supervised to ensure that they do not play with the appliance.
- WARNING: Risk of fire disaster and electric shock
  The power cord should be replaced when it has been damaged. please contact the distributor or local service agent for replacement.
- Please unplug the power plug from socket when clean the appliance or leave the appliance nonuse for a long time.
- Do not use extension cord or ungrounded (two prong) adapters.
- WARNING: Keep ventilation openings, in the appliance enclosure or in the built-in structure, clear of obstruction.

- WARNING: Do not use mechanical devices or other means to accelerate the defrosting process, other than those recommended by the manufacturer.
- WARNING: Do not damage the refrigerant circuit.
- WARNING: Do not use electrical appliances inside the food storage compartments of the appliance, unless they are of the type recommended by the manufacturer.
- WARNING:Please abandon the refrigerator according to local regulators for it use flammable blowing gas and refrigerant.
- WARNING: When positioning the appliance, ensure the supply cord is not trapped or damaged.
- WARNING: Do not locate multiple portable socket-outlets or portable power supplies at the rear of the appliance.
- DANGER: Risk of child entrapment. Before you throw away your old refrigerator or freezer:
  -Take off the doors.
  -Leave the shelves in place so that children may not easily climb inside.
- The refrigerator must be disconnected from the source of electrical supply before attempting the installation of accessory.
- Refrigerant and cyclopentane foaming material used for the refrigerator are flammable.Therefore, when the refrigerator is scraped, it shall be kept away from any fire source and be recovered by a special recovering company with corresponding qualification other than be disposed by combustion, so as to prevent damage to the environment or any other harm.

- For EN standard: This appliance can be used by children aged from 8 years and above and persons with reduce physical sensory or mental capabilities or lack of experience and knowledge if they have been given supervision or instruction concerning use of the appliance in a safe way and understand the hazards involved. Children shall not play with the appliance. Cleaning and user maintenance shall not be made by children without supervision.
- For IEC standard: This appliance is not intended for use by persons (including children) with reduced physical, sensory or mental capabilities, or lack of experience and knowledge, unless they have been given supervision or instruction concerning use of the appliance by a person responsible for their safety.)
- Please do not use the appliance on traffic means(such as ship and so on).
- If noise, odor and smoking happens, please unplug the power plug immediately,and contact the distributor or local service agent.
- Please do not put your hands under or behind the appliance to prevent from being hurt.
- Please leave the packing materials and other parts out of the reach of children to prevent from risk of suffocation.
- Children should be supervised to ensure that they do not play with the appliance.
- The instructions shall include the substance of the following: To avoid contamination of food, please respect the following instructions:
- – Opening the door for long periods can cause a significant increase of the temperature in the compartments of the appliance.
- – Clean regularly surfaces that can come in contact with food and accessible drainage systems.
- – Clean water tanks if they have not been used for 48 h; flush the water system connected to a water supply if water has not been drawn for 5 days. (note 1)
- – Store raw meat and fish in suitable containers in the refrigerator, so that it is not in contact with or drip onto other food.

- – Two-star (**) frozen-food compartments are suitable for storing pre-frozen food, storing or making ice-cream and making ice cubes. (note 2)
- – One (*) -,two (**) -and three-star (***) compartments are not suitable for the freezing of fresh food. (note 3)
- – If the refrigerating appliance is left empty for long periods, switch off, defrost, clean, dry, and leave the door open to prevent mould developing within the appliance.
- Note 1,2,3 : Please confirm whether it is applicable according to you product compartment type.

1.2 Meaning of safety warning symbols



Prohibition symbol

This is a prohibition symbol.
Any incompliance with instructions marked with this symbol may result in damage to the product or endanger the personal safety of the user.



Warning symbol

This is a warning symbol.
It is required to operate in strict observance of instructions marked with this symbol; or otherwise damage to the product or personal injury may be caused.



Cautioning symbol

This is a cautioning symbol.
Instructions marked with this symbol require special caution. Insufficient caution may result in slight or moderate injury, or damage to the product.

This manual contains lots of important safety information which shall be observed by the users.

1.3 Electricity related warnings

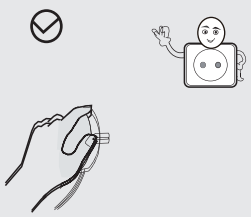

- Do not pull the power cord when pulling the power plug of the refrigerator. Please firmly grasp the plug and pull out it from the socket directly.
- To ensure safe use, do not damage the power cord or use the power cord when it is damaged or worn.

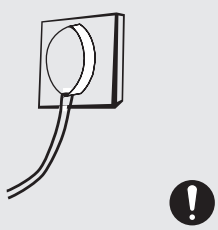

- Please do not touch the power plug with wet hand to prevent from electric shock.
- Please use a dedicated power socket and the power socket shall not be shared with other electrical appliances. The power plug should be firmly contacted with the socket or else fires might be caused.



- Please ensure that the grounding electrode of the power socket is equipped with a reliable grounding line.
- Please ask for help from persons with professional qualification to examine whether the socket is with reliable grounding line or not.
- It is the end-consumers' responsibility to change the ungrounded socket into grounded socket.

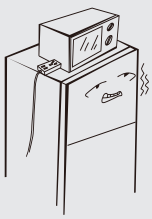

- Please turn off the valve of the leaking gas and then open the doors and windows in case of leakage of gas and other flammable gases. Do not unplug the refrigerator and other electrical appliances considering that spark may cause a fire.
- Do not use electrical appliances on the top of the appliance, unless they are of the type recommended by the manufacturer.

1.4 Warnings for using

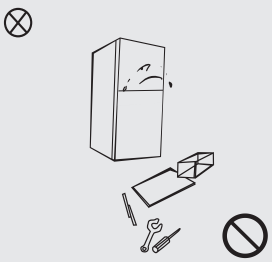

- Do not arbitrarily disassemble or reconstruct the refrigerator, nor damage the refrigerant circuit; maintenance of the appliance must be conducted by a specialist.
- Damaged power cord must be replaced by the manufacturer, its maintenance department or related professionals in order to avoid danger.

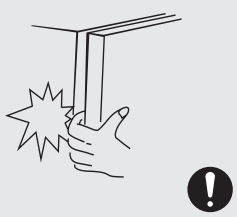

- The gaps between refrigerator doors and between doors and refrigerator body are small, be noted not to put your hand in these areas to prevent from squeezing the finger. Please be gentle when close the refrigerator door to avoid falling articles.

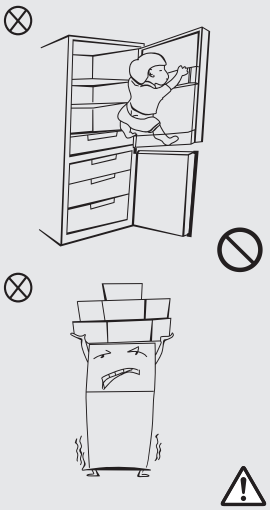

- Do not pick foods or containers with wet hands in the freezing chamber when the refrigerator is running, especially metal containers in order to avoid frostbite.
- Do not allow any child to get into or climb the refrigerator; otherwise suffocation or falling injury of the child may be caused.
- Please do not put heavy or dangerous objects on top of the appliance(bottles,tableware,or something containing liquid)

1.5 Warnings for placement



- Do not put flammable, explosive, volatile and highly corrosive items in the refrigerator to prevent damages to the product or fire accidents.
- Do not place flammable items near the refrigerator to avoid fires.
- The refrigerator is intended for household use, such as storage of foods; it shall not be used for other purposes, such as storage of blood, drugs or biological products, etc.
- Do not store beer, beverage or other fluid contained in bottles or enclosed containers in the freezing chamber of the refrigerator; or otherwise the bottles or enclosed containers may crack due to freezing to cause damages.

1.6 Warnings for energy

- Refrigerating appliances might not operate consistently (possibility of defrosting of contents or temperature becoming too warm in the frozen food compartment) when sited for an extended period of time below the cold end of the range of temperatures for which the refrigerating appliance is designed.
- The fact that effervescent drinks should not be stored in food freezer compartments or cabinets or in low-temperature compartments or cabinets, and that some products such as water ices should not be consumed too cold;
- The need to not exceed the storage time(s) recommended by the food manufacturers for any kind of food and particularly for commercially quick-frozen food in food-freezer and frozen-food storage compartments or cabinets;
- The precautions necessary to prevent an undue rise in the temperature of the frozen food while defrosting the refrigerating appliance, such as wrapping the frozen food in several layers of newspaper.
- The fact that a rise in temperature of the frozen food during manual defrosting, maintenance or cleaning could shorten the storage life.
- The necessity that, for doors or lids fitted with locks and keys, the keys be kept out of the reach of children and not in the vicinity of the refrigerating appliance, in order to prevent children from being locked inside.

1.7 Warnings for disposal



- Refrigerant and cyclopentane foaming material used for the refrigerator are flammable. Therefore, when the refrigerator is scrapped, it shall be kept away from any fire source and be recovered by a special recovering company with corresponding qualification other than be disposed by combustion, so as to prevent damage to the environment or any other harm.



- When the refrigerator is scrapped, disassemble the doors, and remove gasket of door and shelves; put the doors and shelves in a proper place, so as to prevent trapping of any child.

2. Proper use of refrigerators

2.1 Placement

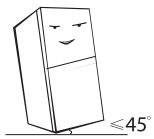

- Before initial start, keep the refrigerator still for half an hour before connecting it to power supply.
- Before the refrigerator is moved, take all objects inside out, fix the glass partitions, vegetable holder, freezing chamber drawers and etc. with tape, and tighten the leveling feet; close the doors and seal them with tape. During moving, the appliance shall not be laid upside down or horizontally, or be vibrated; the inclination during movement shall be no more than 45°.

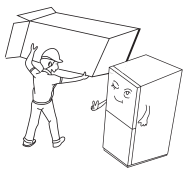

- Before use, remove all packing materials, including bottom cushions, foam pads and tapes inside of the refrigerator; tear off the protective film on the doors and the refrigerator body. Keep away from heat and avoid direct sunlight. Do not place the freezer in moist or watery places to prevent rust or reduction of insulating effect.

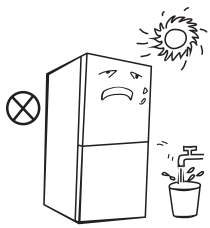

- Do not spray or wash the refrigerator; do not put the refrigerator in moist places easy to be splashed with water so as not to affect the electrical insulation properties of the refrigerator.



- The refrigerator is placed in a well-ventilated indoor place; the ground shall be flat, and sturdy (rotate left or right to adjust the wheel for leveling if unstable).

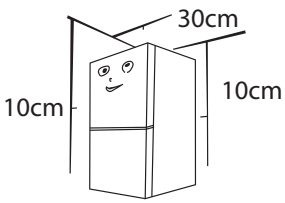

- The top space of the refrigerator shall be greater than 30cm, and the refrigerator should be placed against a wall with a free distance more than 10cm to facilitate heat dissipation.

Precautions before installation:
Before installation or adjusting of accessories, it shall be ensured that the refrigerator is disconnected from power. Precautions shall be taken to prevent fall of the handle from causing any personal injury.

2.2 Leveling feet

1. Precautions before operation:

Before operation of accessories, it shall be ensured that the refrigerator is disconnected from power.

2. Schematic diagram of the levelling feet:

Before adjusting the leveling feet, precautions shall be taken to prevent any personal injury.

3. Adjusting procedures:

a. Turn the feet clockwise to raise the refrigerator;

b. Turn the feet counterclockwise to lower the refrigerator;

c. Adjust the right and left feet based on the procedures above to a horizontal level.

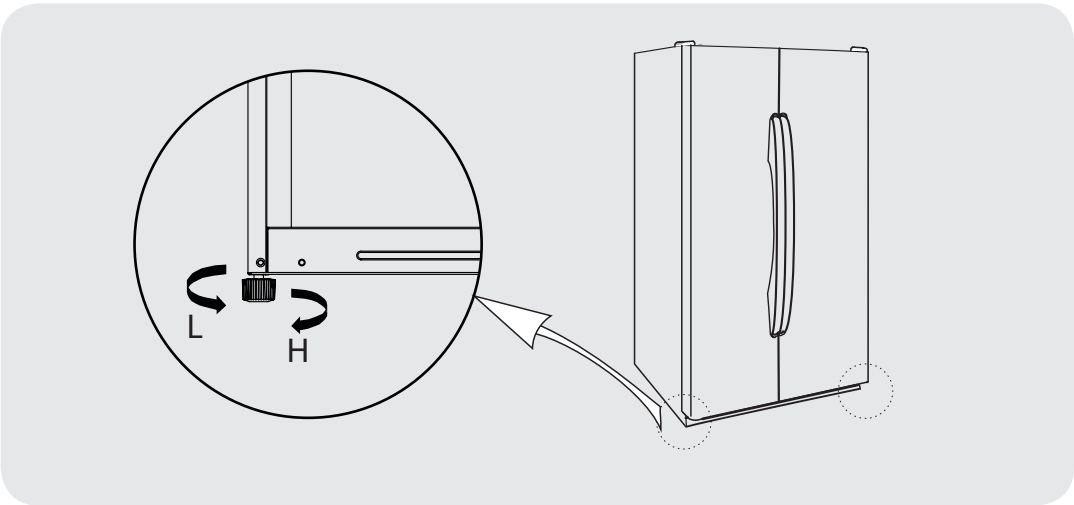

(The picture above is only for reference.The actual configuration will depend on the physical product or statement by the distributor)

2.3 Leveling door

1. Precautions before operation:

Before operation of accessories, it shall be ensured that the refrigerator is disconnected from power. Before adjusting the door , precautions shall be taken to prevent any personal injury.

2. Schematic diagram of levelling the door body.

List of tools to be provided by the user	
M10	Wrench

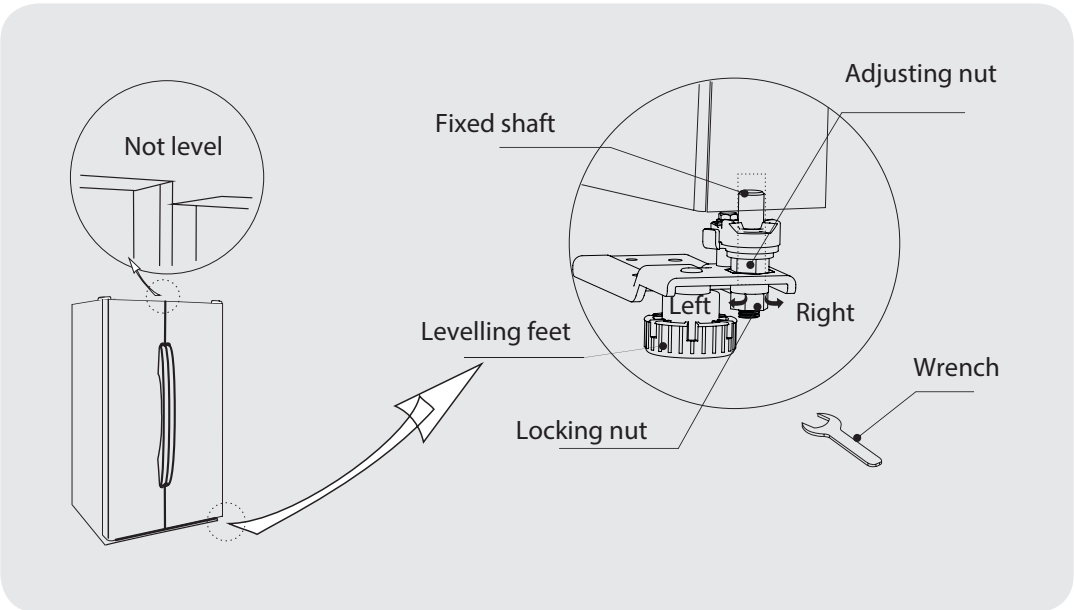

(The picture above is only for reference.The actual configuration will depend on the physical product or statement by the distributor)

When the fridge door is low:

- Open the door, use a wrench to loosen the locking nut and to rotate the adjusting nut anti-clockwise to raise the height of the door. Once the doors are aligned, then tighten the locking nut by rotating it anti-clockwise.

When the fridge door is high:

- Open the door, use a wrench to rotate the adjusting nut clockwise to lower the height of the door. Once the doors are aligned, then tighten the locking nut by rotating it anti-clockwise.

2.4 Changing the Light

Any replacement or maintenance of the LED lamps is intended to be made by the manufacturer, its service agent or similar qualified person.

2.5 Starting

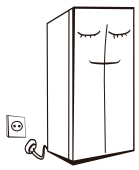

- Before putting any fresh or frozen foods, the refrigerator shall have run for 2-3 hours, or for above 4 hours in summer when the ambient temperature is high.

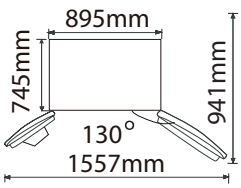

- Spare enough space for convenient opening of the doors and drawers or statement by the distributor.

2.6 Energy saving tips

- The appliance should be located in the coolest area of the room, away from heat producing appliances or heating ducts, and out of the direct sunlight.
- Let hot foods cool to room temperature before placing in the appliance. Overloading the appliance forces the compressor to run longer. Foods that freeze too slowly may lose quality, or spoil.
- Be sure to wrap foods properly, and wipe containers dry before placing them in the appliance.This cuts down on frost build-up inside the appliance.
- Appliance storage bin should not be lined with aluminum foil, wax paper, or paper toweling. Liners interfere with cold air circulation, making the appliance less efficient.
- Organize and label food to reduce door openings and extended searches. Remove as many items as needed at one time, and close the door as soon as possible.

3. Structure and functions

3.1 Key components

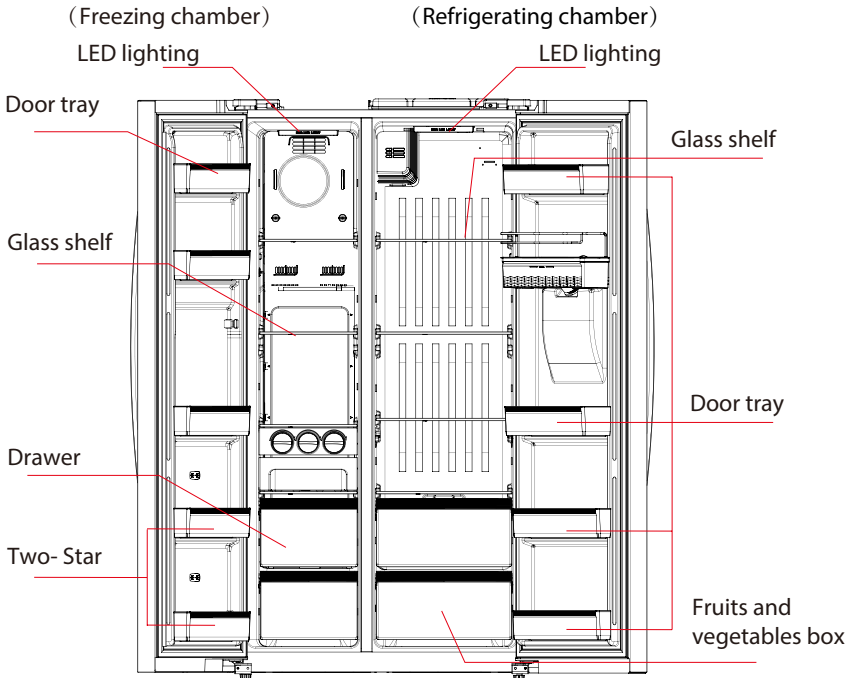

(The picture above is only for reference. The actual configuration will depend on the physical product or statement by the distributor)

Refrigerating chamber

- The Refrigerating Chamber is suitable for storage of a variety of fruits, vegetables, beverages and other food consumed in the short term.
- Cooking foods shall not be put in the refrigerating chamber until cooled to room temperature.
- Foods are recommended to be sealed up before putting into the refrigerator.
- The glass shelves can be adjusted up or down for a reasonable amount of storage space and easy use.

Freezing chamber

- The low temperature freezing chamber may keep food fresh for a long time and it is mainly used to store frozen foods and making ice.
- The freezing chamber is suitable for storage of meat, fish, rice balls and other foods not to be consumed in short term.
- Chunks of meat are preferably to be divided into small pieces for easy access. Please be noted food shall be consumed within the shelf time.

Two-Star freezing area

- Two-Star freezing area is located under the freezer door two bottle frame (16L or so), temperature ≤-12℃ , suitable for storing ice cream and so on, external hard inside soft, taste times good.

Note: Storage of too much food during operation after the initial connection to power may adversely affect the freezing effect of the refrigerator. Foods stored shall not block the air outlet; or otherwise the freezing effect will also be adversely affected.

3.2 Functions

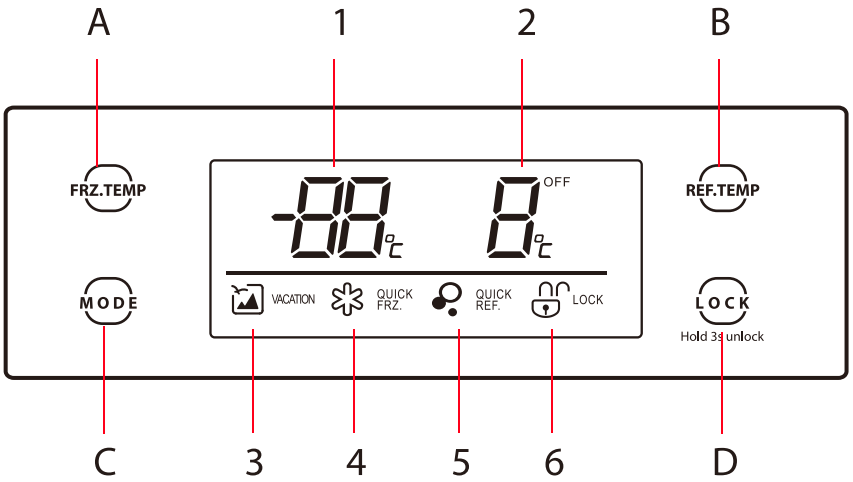

(The picture above is only for reference.The actual configuration will depend on the physical product or statement by the distributor)

1. Display screen

1. Freezer compartment temperature
2. Refrigerating compartment temperature
3. Vacation icon
4. Quick Freezing icon
5. Quick Refrigerating icon
6. Lock/unlock icon

2. Button operation

A. Freezer compartment temperature adjustment
B. Refrigerating compartment temperature adjustment
C. Mode function/setting
D. Lock/unlock controls

3.Operation

1) Lock / unlock

In the unlocked state, long press the button (LOCK Hold 3s unlock) for 3 seconds, enter the lock state;
In the locked state, long press the button (LOCK Hold 3s unlock) for 3 seconds, enter the unlocked state.
All the following functions must be operated in the unlocking status.

2) Vacation mode

Click the button (MODE) to enter the vacation mode. Icon lights up, the vacation mode will start after locking the control panel.

Under vacation mode,the refrigerating compartment is turned off and temperature area display -the freezer compartment temperature is set at -18 ℃ .

3) Quick Cooling mode

Click the button (MODE) to enter the quick cooling mode. Icon lights up, the quick refrigerating mode will start after locking the control panel.

4) Quick Freezing mode

Click the button MODE to enter the quick freezing mode. Icon lights up, the quick freezing mode will start after locking the control panel.

5) Temperature setting of refrigerating chamber

Click temperature adjusting button of the refrigerating chamber REF.TEMP , refrigerating compartment temperature will blink. Then click the button REF.TEMP again to set the temperature, and will hear one beep. Setting scope is between 2°C and 8°C.Every time you click the button, the temperature will be changed 1°C. After adjusting,the digital tube will keep blinking for 5 seconds. New temperature setting will take effect after locking the control panel.

6) Temperature setting of freezing chamber

Click temperature adjusting button of the freezing chamber FRZ.TEMP , freezer compartment temperature will blink . Then click the button FRZ.TEMP again to set the temperature, and you will hear one beep.

Setting scope is between -16°C and -24°C. Every time you click the button, the temperature will be changed1°C. After adjusting, the digital tube will keep blinking for 5 seconds. New temperature setting will take effect after locking the control panel.

7) Storage upon power failure

In case of power failure, the instant working state will be locked and maintained till re-electrification.

8) Opening warning and alarm control

when open the refrigerator doors, the opening music will play. If the door is not closed in two minutes, the buzzer will sound once every minute until the door is closed. Press anyone button to stop the buzzer alarm.

9) Error code

The following warnings appearing on the display indicate corresponding faults of the refrigerator. Though the refrigerator may still have cold storage function with the following faults, the user shall contact a maintenance specialist for maintenance, so as to ensure optimized operation of the appliance.

Error Code	Error Description	Error Code	Error Description
E1	Temperature sensor failure of refrigerating chamber	E6	Communication error
E2	Temperature sensor failure of freezing chamber	E7	Ambient temperature sensor error
E5	Freezing defrost sensor detection circuit error		

4. Maintenance and care of the appliance

4.1 Overall cleaning

- Dusts behind the refrigerator and on the ground shall be timely cleaned to improve the cooling effect and energy saving.
- Check the door gasket regularly to make sure there are no debris. Clean the door gasket with a soft cloth dampened with soapy water or diluted detergent.
- The interior of the refrigerator should be cleaned regularly to avoid odor.
- Please turn off the power before cleaning interior, remove all foods, drinks ,shelves, drawers, etc.
- Use a soft cloth or sponge to clean the inside of the refrigerator, with two tablespoons of baking soda and a quart of warm water. Then rinse with water and wipe clean. After cleaning, open the door and let it dry naturally before turning on the power.
- For areas that are difficult to clean in the refrigerator (such as narrow sandwiches, gaps or corners), it is recommended to wipe them regularly with a soft rag, soft brush, etc. and when necessary, combined with some auxiliary tools (such as thin sticks) to ensure no contaminants or bacterials accumulation in these areas.
- Do not use soap, detergent, scrub powder, spray cleaner, etc., as these may cause odors in the interior of the refrigerator or contaminated food.
- Clean the bottle frame, shelves and drawers with a soft cloth dampened with soapy water or diluted detergent. Dry with a soft cloth or dry naturally.
- Wipe the outer surface of the refrigerator with a soft cloth dampened with soapy water, detergent, etc., and then wipe dry.
- Do not use hard brushes, clean steel balls, wire brushes, abrasives (such as toothpastes), organic solvents (such as alcohol, acetone, banana oil, etc.), boiling water, acid or alkaline items, which may damage the fridge surface and interior. Boiling water and organic solvents such as benzene may deform or damage plastic parts.



- Do not rinse directly with water or other liquids during cleaning to avoid short circuits or affect electrical insulation after immersion.

Please unplug the refrigerator for defrost and cleaning.

4.2 Cleaning of door tray、 Fruits and vegetables box and drawer

- According to the direction arrow in the figure below, use both hands to squeeze the tray, and push it upward, then you can take it out.
- After washing the tray having been taken out, you can adjust its installing height in accordance with your requirement.
- Soft towels or sponge dipped in water and non-corrosive neutral detergents are suggested for cleaning. The freezer of shall be finally cleaned with clean water and dry cloth. Open the door for natural drying before the power is turned on.
- Do not use hard brushes, clean steel balls, wire brushes, abrasives, such as toothpastes, organic solvents (such as alcohol, acetone, banana oil, etc.), boiling water, acid or alkaline items clean refrigerator considering that this may damage the fridge surface and interior.

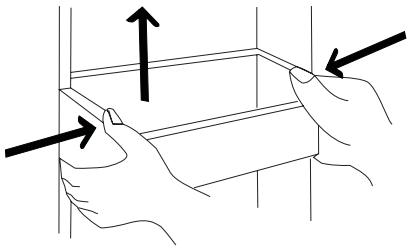

4.3 Cleaning of Glass shelf

- As the innermost part of the refrigerator liner where contacting the shelves has a backstop, you shall raise the shelves upward, then you can be able to take it out.
- Adjust or clean the shelves according to your requirement. Soft towels or sponge dipped in water and non-corrosive neutral detergents are suggested for cleaning. The freezer of shall be finally cleaned with clean water and dry cloth. Open the door for natural drying before the power is turned on. Do not use hard brushes, clean steel balls, wire brushes, abrasives, such as toothpastes, organic solvents (such as alcohol, acetone, banana oil, etc.), boiling water, acid or alkaline items clean refrigerator considering that this may damage the fridge surface and interior.

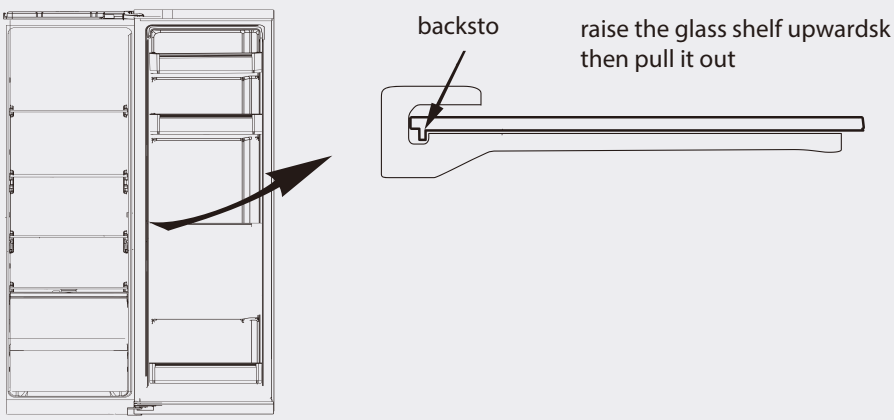

(The picture above is only for reference. The actual configuration will depend on the physical product or statement by the distributor)

4.4 Defrosting

- The refrigerator is made based on the air-cooling principle and thus has automatic defrosting function. Frost formed due to change of season or temperature may also be manually removed by disconnection of the appliance from power supply or by wiping with a dry towel.

4.5 Out of operation

- Power failure: In case of power failure, even if it is in summer, foods inside the appliance can be kept for several hours; during the power failure, the times of door opening shall be reduced, and no more fresh food shall be put into the appliance.
- Long-time nonuse: The appliance shall be unplugged and then cleaned; then the doors are left open to prevent odor.
- Moving: Before the refrigerator is moved, take all objects inside out, fix the glass partitions, vegetable holder, freezing chamber drawers and etc. with tape, and tighten the leveling feet; close the doors and fix them with tape. During moving, the appliance shall not be laid upside down or horizontally, or be vibrated; the inclination during movement shall be no more than 45°.

The appliance shall run continuously once it is started. Generally, the operation of the appliance shall not be interrupted;otherwise the service life may be impaired.

5. Trouble shooting

- You may try to solve the following simple problems by yourself. If them cannot be solved, please contact the after-sales department.

Occurrence	Possible cause/inspection items
Failed operation	Check whether the appliance is connected to power or whether the plug is in well contact Check whether the voltage is too low Check whether there is a power failure or partial circuits have tripped
Odor	Odorous foods shall be tightly wrapped Check whether there is any rotten food Clean the inside of the refrigerator
Long-time operation of the compressor	Long operation of the refrigerator is normal in summer when the ambient temperature is high It is not suggestible having too much food in the appliance at the same time Food shall get cool before being put into the appliance The doors are opened too frequently
Light fails to get lit	Check whether the refrigerator is connected to power supply and whether the illuminating light is damaged Have the light replaced by a specialist
Doors cannot be properly closed	The door is stuck by food packages Too much food is placed The refrigerator is tilted
Loud noise	Check whether the floor is level and whether the refrigerator is placed stably Check whether accessories are placed at proper locations
Door seal fails to be tight	Remove foreign matters on the door seal Heat the door seal and then cool it for restoration (or blow it with an electrical drier or use a hot towel for heating)
Water pan overflows	There is too much food in the chamber or food stored contains too much water,resulting in heavy defrosting The doors are not closed properly, resulting in frosting due to entry of air and increased water due to defrosting
Hot housing	Heat dissipation of the built-in condenser via the housing, which is normal When housing becomes hot due to high ambient temperature, storage of too much food or shutdown of the compressor is shut down, provide sound ventilation to facilitate heat dissipation
Surface condensation	Condensation on the exterior surface and door seals of the refrigerator is normal when the ambient humidity is too high. Just wipe the condensate with a clean towel.
Abnormal noise	Buzz: The compressor may produce buzzes during operation, and the buzzes are loud particularly upon start or stop. This is normal. Creak: Refrigerant flowing inside of the appliance may produce creak, which is normal.

6. Disposal of your appliance



Correct Disposal of this product:
This marking indicates that this product should not be disposed with other household wastes throughout the EU. To prevent possible harm to the environment or human health from uncontrolled waste disposal, recycle it responsibly to promote the sustainable reuse of material resources. To return your used device, please use the return and collection systems or contact the retailer where the product was purchased. They can take this product for environmental safe recycling.

AMBIENT TEMPERATURE

This appliance is designed to operate in ambient temperature specified by its category marked on the rating plate.

Climate category	Ambient temperature (from... to...)
SN	+10°C to + 32°C
N	+16°C to + 32°C
ST	+16°C to + 38°C
T	+16°C to + 43°C

How to Use this Water Dispenser

Warning

1.Only purified and cold boiled water have access to this water dispenser, and the two kinds must free from any impurity. Coke, apple juice and other soft drinks that contain Carbon dioxide are forbidden.
2.It is not allowed to fill water when the water boxes is removed from the machine door.
3.Never fill more water than the maximum figure that indicated on the water box.
4.Check out whether the water box is on its foundation bed when you are not able to get water normally as usual.
5.When you are trying to move the water box, be sure that there is no water in it.
6.You are not allowed to remove any element of the water valve.
7.When use the machine for the first time or it has been out of application for a long time, remove and clean it up before you put it into application.
8.If water in this machine has been out of use for a long period, you had better to drain them out of the dispenser and add pure water, and then it can be used as usual.
9.It is suggested that the product should be cleaned up every three to six months.
10.When you are cleaning this product, if cleaning solution is used, you had better put the water box to its original position, and fill the water box, then you shall drain 5 to 6 cups of water, in case that there is any rudimental dirt of water dispenser instruction after you used cleaning solution.
11.When you are opening or closing the door of the water dispenser, try to avoid overexerting in case that water in the box move and overflows.
12.Do not touch the bottle frame above when adding water.

Instruction of water dispenser

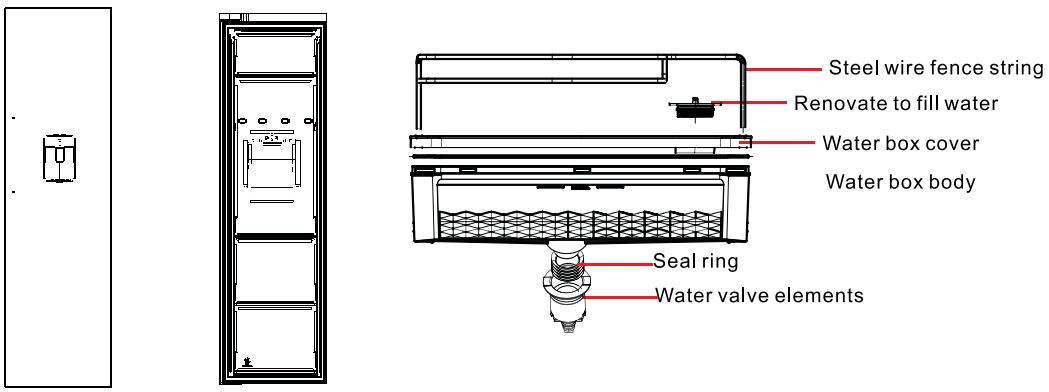

Filling of drinking water:

Open the water box, put the watering cover and then you can add water:

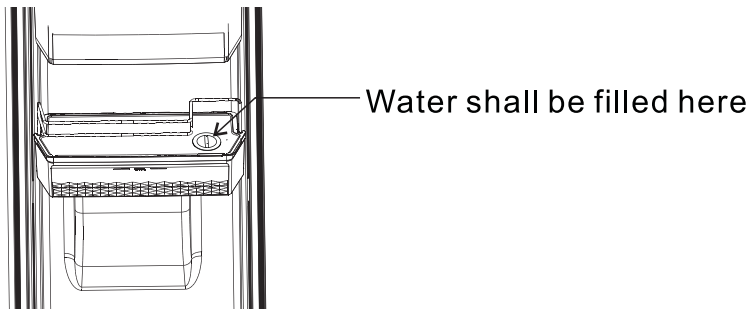

How to Get the Drinking Water

1.Push the water shank inward by the cup

2.When you put the hand shank inward, there will be some water outflows, when the hand shank is in its original position, no water outflows.

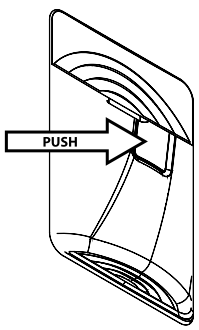

How to Remove and Clean up the Water Dispenser

First Step: remove

1. Take out the elements of the water box Stick to both sides of the water box elements with both of your hands, and draw out the elements of the water box outwards through 45 above. You can translate the water box (to the side of the user) and get the elements when the elements are out of water valve elements (when you move the box, be sure that there is no water in it.)

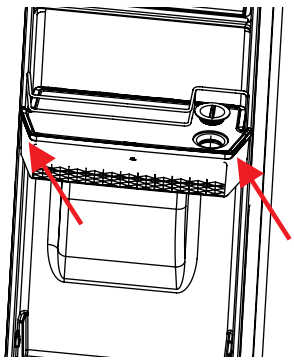

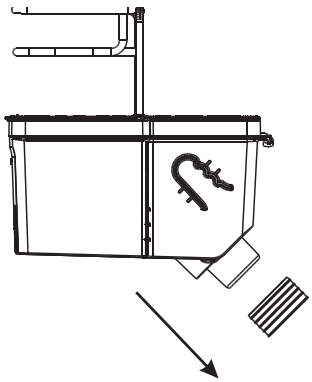

2. Take down the seal ring of the water box elements

3. Step to remove the elements of water valve Use the screwdriver and make the edge directs to the water valve elements and then insert it in the free place that highlights outskirt, rotates the screwdriver clockwise or anticlockwise, with the screwdriver moving, when it tops the penstock, extracts the water valve elements by hands at the direction of above 45°(You can not remove the elements of water valve)

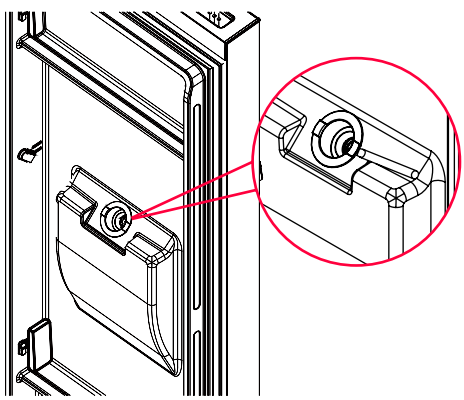

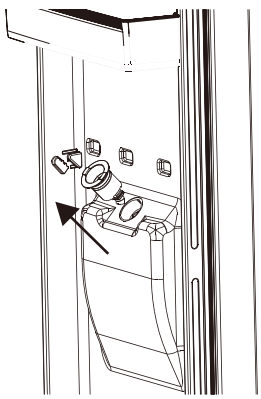

Step 2: Clean up

1. Remove the water box itself, and the water box cover, the seal ring and the water valve elements

2. Clean up the elements of the water box with cold or warm water.

3. Wipe out the water with dry cloth

Notes:

1. If you clean the water dispenser by cleaning solution, you had better put the box to its originally position, and drain 5 to 6 cups of water out, then you can use it normally, in case that there is remaining dirt of application instruction.

Step 3: Installation

1. Installation of water valve elements

Put the guide projecting platform directed to the guide groove, after that, push it downside with 45?slantly at full tilt, until you hear a crack

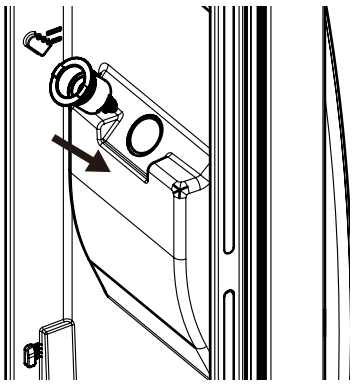

2. Installation of seal ring of the water box

Put the seal ring to the bottom of the water box, and be sure that the seal ring is in place. Avoid that wrinkle seal ring or in wrong place.

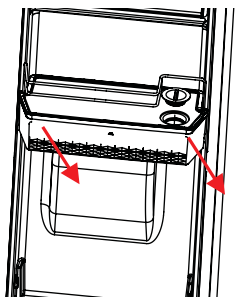

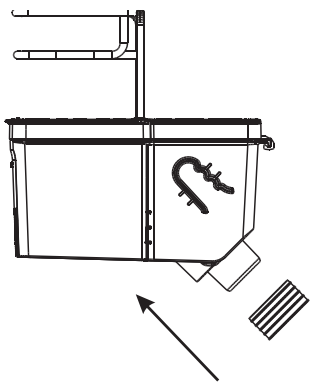

3. The Installation of water box elements

To keep the hanging slot of the water box elements direct to the hangers on the door liner. The seal ring at the bottom of the box shall directed to the entrance of the water valve elements, insert it to the corresponding position along with the 45°slantly

TOSHIBA

Hefei Hualing Co.,Ltd.
176 Jin Xiu Road, Hefei Economic and Technological Development
MADE IN CHINA