PORTABLE ICE MAKER

Instruction Manual

SKU: ZX-IM-16S-WM-HM

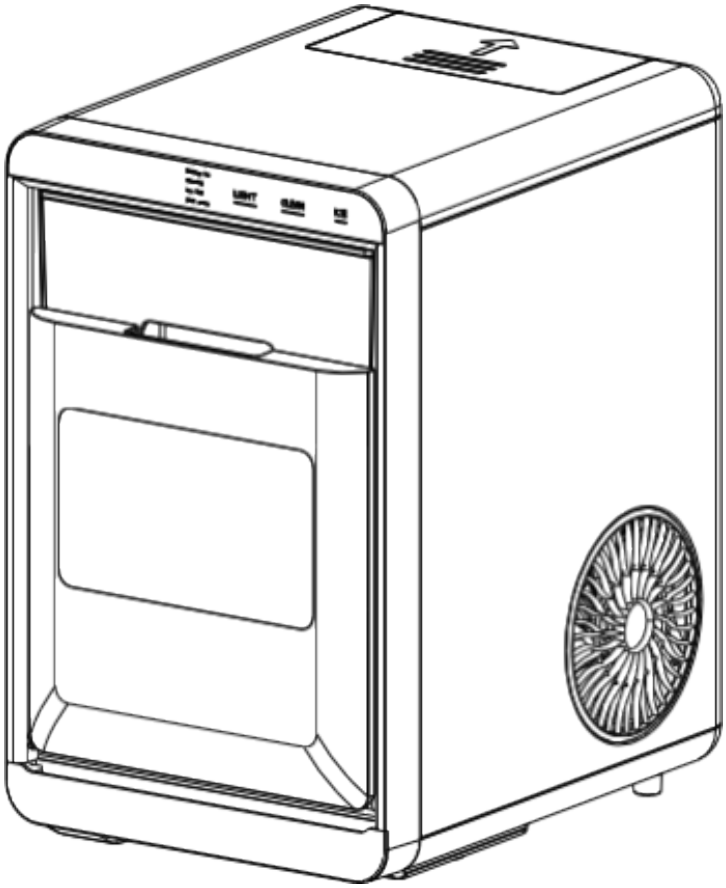

Congratulations

Dear Customer:

Welcome to family. Thank you for purchasing one of our products.

Our goal is to provide you with superior service. If there is anything missing from or wrong with your order, or if you have any questions about using our ice maker, PLEASE contact us.

Email: support@homyd.com

The team is available 24/7 to address your questions, comments, and concerns. Your satisfaction is our ultimate goal. We want to make everything right so you'll share your positive experience with other shoppers.

If you experience any problems, please send an email to support@homyd.com.

Our mission:
*** To be the most trusted appliance brand.**
*** To create practical, compact appliances that better your life.**

Q&A

1. How often do I need to clean my ice maker?

It depends on your usage habits. If you use the ice maker often, it is recommended that you clean it at least once a week. Failure to clean the machine will cause scale accumulation, which will eventually block the pump and cause the product to stop working.

2. How should I clean the machine?

It is recommended to use lemon water or a solution of low-acid vinegar and water for cleaning. Drain the machine immediately after cleaning and then rinse it with pure water.
It is recommended to drain the water tank at least once every three days. This keeps the hardness of the water low, ensures that impurities can be discharged, and prevents scale buildup in the water tank.

3. Why are my ice cubes cloudy?

It means that your water quality is turbid. It is recommended to use only drinking water and distilled water. If your water quality problem is serious, it is recommended that you install a water filtration system on your faucet.

4. Can I put milk and juice into the water tank to make ice cubes?

Using liquids other than water to make ice cubes is not recommended. Our research has found that the particles in milk and beverages can easily block the pump and reduce the life of the pump. Also, the protein in milk is prone to calcification, which chemically reacts with the PU water pipe inside the machine and easily breaks it, making the product unable to continue working.

5. Why do my ice cubes melt easily?

Because the ice maker is not a refrigerator, it does not have a heat-control function. High ambient temperatures in summer will accelerate the melting of ice cubes. You can close the lid of the machine to maintain the internal temperature. Some users put electric fans by the machine to blow away hot air, which you can also try. However, if you are not going to use the ice cubes for a long time, we recommend removing them from the ice basket and storing them in your freezer.

6. Why do my ice cubes stick together?

Either the room temperature or the water temperature is too low. You can add water to increase the temperature of the water in the tank. If this does not work, then the evaporator may have sagged and become deformed. It is recommended that you push up the cubes with your hand.

7. Why do the ice cubes I made smell of plastic?

The ice cubes themselves have no taste. If they smell of plastic, first try to clean the inside of the machine with lemon water. Then run a few ice-making cycles and discard the ice cubes made. Finally, rinse the machine with distilled water.

8. Why does my machine make noise when it is running?

The machine will make a faint sound when it is running. Closing the lid can reduce the noise. If the water pump makes noise during use, it is recommended to turn off the machine first. Then turn on the machine after cleaning the filter in the water tank to see whether the noise disappears.

Q&A

9. Why is water leaking from my machine?

It may be that the tube inside the machine fell off during transport. You can remove the back cover of the machine and reconnect the tube yourself. If you do not know how to do this, please contact the team. We will refer you to a professional video to help you solve the problem.

10. Why is there water flowing but not making ice?

If the ambient temperature and refrigeration pipe are OK, then the refrigerant in the machine has leaked. Please send us a video or picture, and the team will help you.

11. Why the ice making is not big?

When the ambient temperature or the initial water temperature is too high or the machine's evaporator column deformation will lead to the production of ice is not large enough.It is recommended to continue to wait for the machine to make a few more rounds of ice, or add the water temperature of the tank is not too high, and then the deformed evaporator column will be manually pulled down to restore its original state.

Contents

Safety Precautions	2-3
Unit Construction & Operation	4-10
Maintenance & Tips	11
Technical Parameters & Circuit Diagram	12
Warranty	13
Troubleshooting	14

Safety Precautions

Your safety and the safety of others are very important.

This manual includes important safety messages regarding your appliance.

Always read and follow all safety messages.

This is the safety alert symbol:



All safety messages will follow the safety alert symbol and the word "DANGER" or "WARNING"





These symbols mean:

You could be killed or seriously injured if you do not follow instructions exactly.

Safety messages will tell you what the potential hazard is, how to reduce the chance of injury, and what can happen if the instructions are not followed.

Safety Precautions

When using electrical appliances, basic safety precautions should be followed to reduce the risk of fire, electric shock, and injury to persons or property. Read all instructions before using any appliance.

- Do not operate this or any other appliance with a damaged cord.
  If the supply cord is damaged, it must be replaced by the manufacturer, its service agent, or a similarly qualified person in order to avoid a hazard.
  This icemaker must be positioned so that the plug is accessible.
  Connect to properly grounded outlets only. No other appliance should be plugged into the same outlet. Be sure that the plug is fully inserted into the receptacle.
- Do not run the power cord over carpeting or other heat insulators. Do not cover the cord. Keep the cord away from traffic areas, and do not submerge in water.
- We do not recommend the use of an extension cord, as it may overheat and become a risk of fire. If you must use an extension cord, use No.14AWG minimum size and rated no less than 1875 watts.
- Unplug the icemaker before cleaning or making any repairs or servicing.
- Exercise caution and use reasonable supervision when the appliance is used near children.
- Do not use your icemaker outdoors. Place the icemaker out of direct sunlight and make sure that there is at least 6 inches of space between the back of your unit and the wall. Keep a minimum distance of 6 inches free on each side of your unit.
- Do not use liquids other than water to make ice cubes.
- Do not clean your icemaker with flammable fluids. The fumes can create a fire hazard or explosion.
- Do not tip over.
- If the icemaker is brought in from outside in the wintertime, give it a few hours to warm up to room temperature before plugging it in.

WARNING: This appliance must be earthed.

IMPORTANT: The wires in the mains lead are colored according to the following code:

Green or green with a yellow strip:	Grounding
White:	Neutral
Black:	Live

To avoid a hazard due to instability of the appliance, it must be placed on an even or flat surface.

Unit Construction & Operation

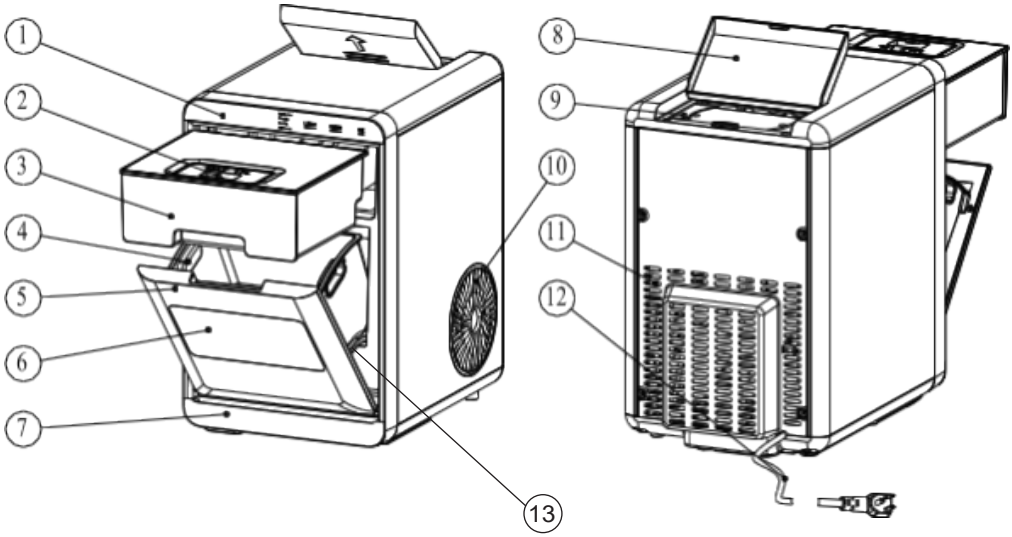

1.Control Panel.
2.Cover for water tank.
3.Water tank.
4.Ice basket.
5.Flip door.
6.Window.
7.Drip tray.
8.Cover for secondary water tank.
9.Secondary water tank.
10.Hot air outlet.
11.Rear panel.
12.Power cord.
13.Overflow box.

Unit Construction & Operation

How to start the unit

1. Pour potable water into water reservoir, 0.47 gallon (1.8 liters) water at most at one time.
2. Open the flip door, pull out the water tank halfway, flip open the lid of the water tank, then add water, and after the tank is filled, push it forward until it is in position.

Note: Please make sure that the water tank is pushed in place, otherwise it may show water shortage!

3. Plug in the power cord.

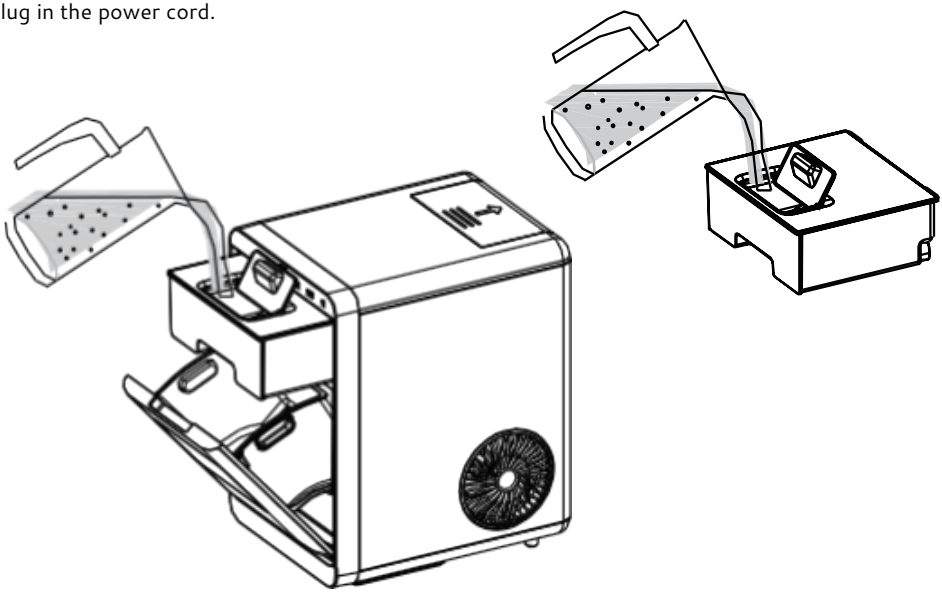

Operation and display areas

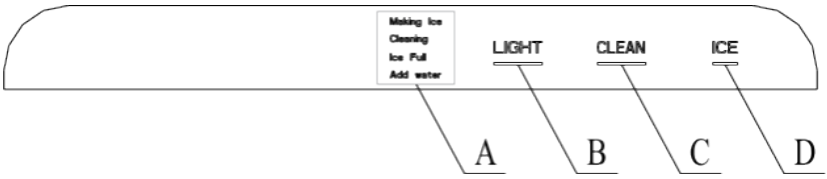

Unit Construction & Operation

A: Status indicator B: LIGHT button C: CLEAN button D: Cleaning indicator button

Plug in the power cord; the screen will light up: you can operate this appliance by pressing the button on the panel as shown above; the main functions include: ice, clean, and light.

System Cleaning/Sanitizing

1.Unplug the nugget icemaker.

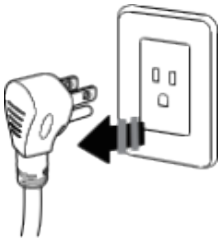

2.Clean the water reservoir and internal water tanks with a soft brush.

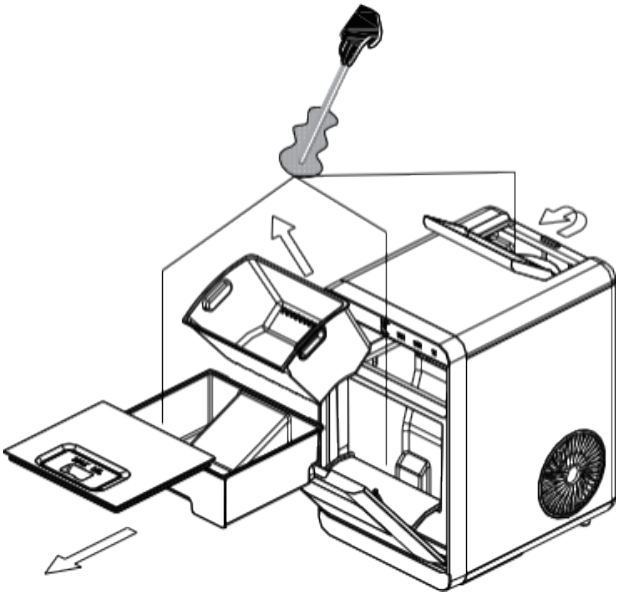

Unit Construction & Operation

3.Take off the bottom drain cap and drain out the water to a sink.
See the figure below.

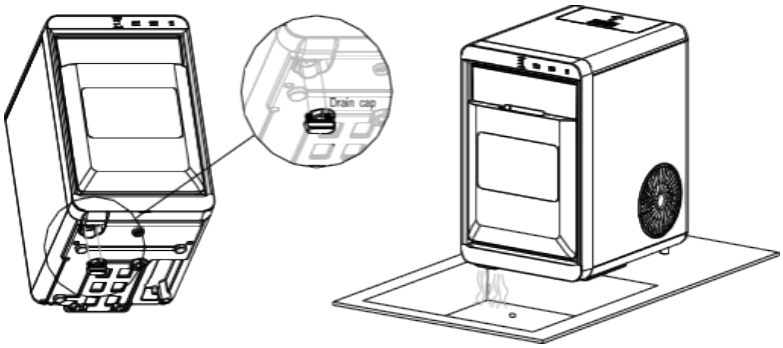

4.Make a solution by diluting one teaspoon of household bleach with five cups of water for daily cleaning.

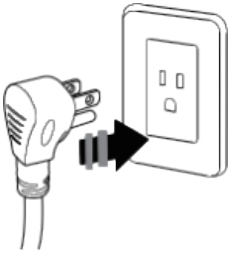

For monthly cleaning of removing mineral deposits, please use white vinegar instead of the above water solution (and then plug in to turn on the "cleaning function" for about 20 minutes. After that, unplug it again to leave the white vinegar in the unit for about 12 hours).





Unit Construction & Operation

5.Pour the solution into the water reservoir (1.8 liter at most). See the figure below.

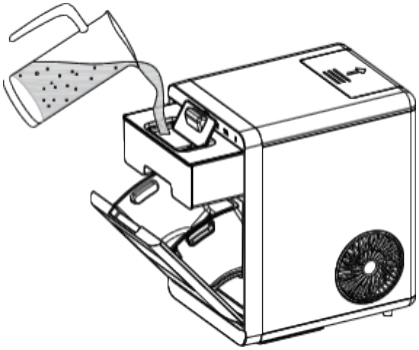

6. Plug in the Nugget icemaker, press the "CLEAN" button to initiate the cleaning process (20 minutes). See the figure below.

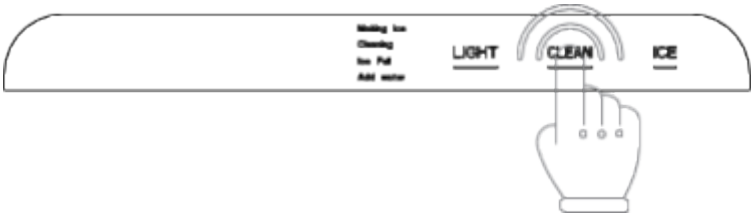

7. When the "cleaning" indicator light is off, take off the drain cap and drain out the water to a sink.

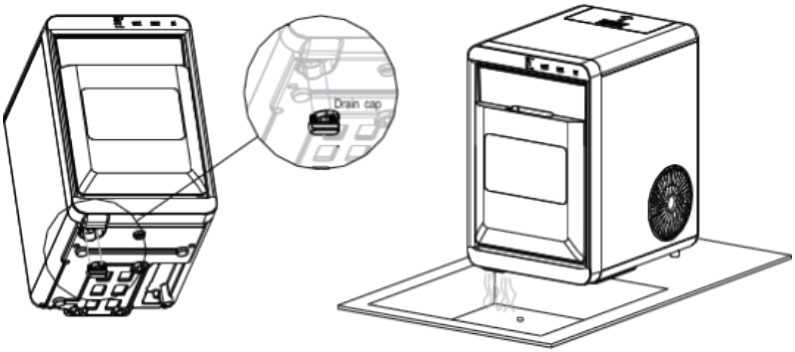

Unit Construction & Operation

8. Repeat steps 5 to 7 with fresh water for two more cycles to rinse the inside.

9. Replace the drain cap. See the figure below.

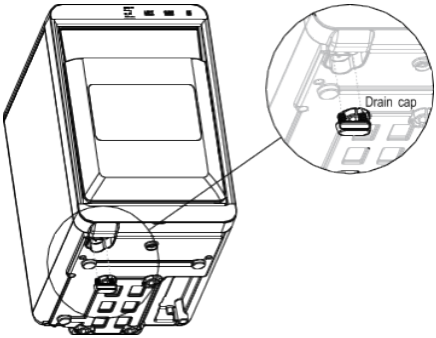

10. When completed, fill the unit with fresh water and press the "ICE" button to start making ice. See the figure below.

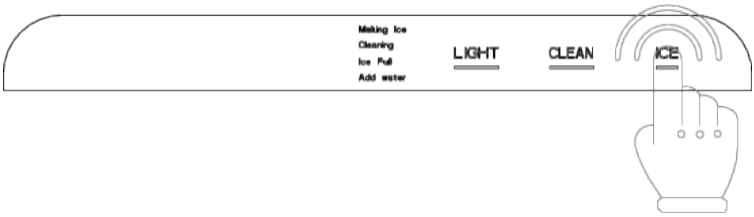

Change water in the water reservoir every 24 hours to ensure a reasonable hygiene level. If the unit isn't to be used, drain all water & dry the water reservoir.

Unit Construction & Operation

How to make ice cubes

1. Before making ice, please make sure the water drain cap has been inserted into the appliance; otherwise it will not work properly.
2. Press the " ICE" button, and the "Making Ice" indicator will come on. Press this button again to stop making ice.

TIP: For the first use, or if the appliance has not been used for a long time, it is recommended to clean this appliance before you start to make ice.

3. While the icemaker is on, verify water level periodically. If water pump can't pump out water, the ice maker will stop automatically, and the "Add Water" indicator will come on. You need to pour water into the water reservoir.

4. You can enjoy your ice cubes when the control panel shows "Ice full" .

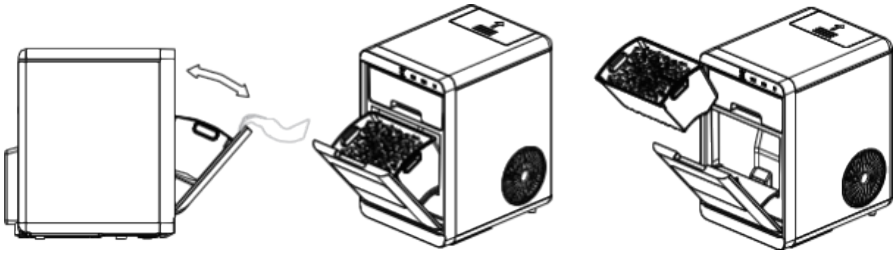

Maintenance & Tips

1.Remove the exterior and interior packaging, and then check all the accessories are included. If any parts are missing, please contact our customer service.
2.Remove all the tape on the unit; take out the accessory parts.
3.Clean the interior with lukewarm water and a soft cloth.
4.Place your ice maker on a level counter top out of direct sunlight and other sources of heat (e.g., a stove, furnace, or radiator). Make sure there is at least 6 inches of space between the back and sides of your ice maker and the wall.
5.Allow one hour for the refrigerant fluid to settle down before plugging in your ice maker.
6.The power plug must be easily accessible.

WARNING: fill with potable water only. Use only drinking water.

DANGER

***Improper use of the grounded plug can result in electrical shock. If the power cord is damaged, please call our customer service.**

1. This unit should be properly grounded for your safety. The power cord of this appliance is equipped with a grounding plug which mates with standard grounding wall outlets to minimize the possibility of electric shock.
2. Plug your appliance into an exclusive, properly installed, grounding wall outlet. Do not under any circumstances; damage the grounding aspect of the plug. Any questions concerning power and/or grounding should be directed to a certified electrician.
3. This appliance requires a standard 110-120Volt, 60Hz electrical outlet with good grounding.

Before using your icemaker, it is strongly recommended to clean it thoroughly.
Unplug the unit before cleaning or any maintenance.

1. Move the machine to the edge of the countertop, then put a container under the counter and unplug the water drain cap to drain out the water inside the unit.
2. Reinsert the water drain cap, and take out the water tank.
3. Then use water to rinse the inside parts, and drain out the water by unplugging the drain cap on the front bottom side.
4. The outside of the icemaker should be cleaned regularly with a mild detergent solution and warm water.
5. Dry the interior and exterior with a clean soft cloth.
6. When the machine is not to be used for a long time, drain water completely and dry the interior.

Technical Parameters & Circuit Diagram

TECHNICAL PARAMETERS

Model	IM-16S
SKU	ZX-IM-16S-WM-HM
Protection Type	I
Power	115V/60Hz
Ice Making Current	2.7A
Refrigerant	R600a / 30g
Vesicant	C5H10
Net Weight	11Kg
Dimension	240x345x376mm



CIRCUIT DIAGRAM

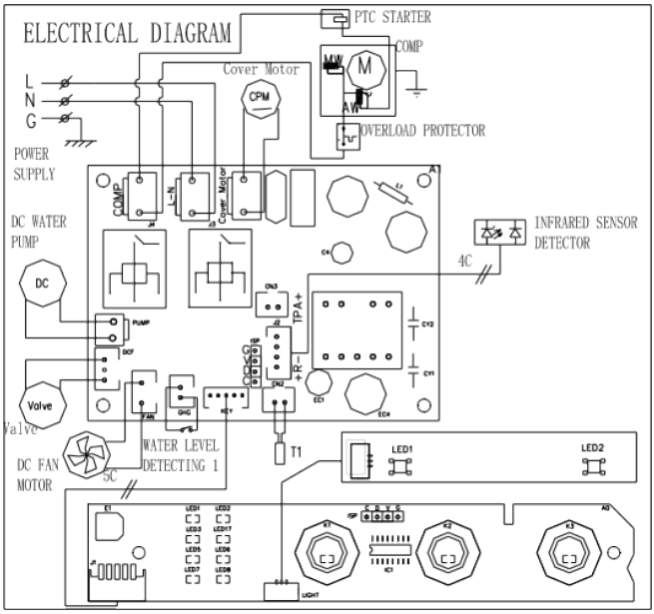

Warranty

TECHNICAL PARAMETERS

When the unit is not to be used again, disposal shall be in accordance with national regulations.

Warranty Information

The manufacturer provides warranty in accordance with the legislation of the customer's own country of residence, with a minimum of 1 year, starting from the date on which the appliance is sold to the end user.

The warranty only covers defects in material or workmanship.

The repairs under warranty may only be carried out by an authorized service technician. When making a claim under the warranty, the original bill of purchase (with purchase date) must be submitted.

The warranty will not apply in cases of:
- Normal wear and tear
- Incorrect use (e.g., overloading of the appliance) or use of non-approved accessories
- Use of force, damage caused by external influences
- Damage caused by non-observance of the user manual (e.g., connection to an unsuitable mains supply or non-compliance with the installation instructions)
- Partially or completely dismantled appliances

Troubleshooting

Problem	Possible Cause	Solution
"Add Water" indicator lights up	There is no water in the water tank. (Lack of water)	Stop the icemaker, fill with water, and press "ICE" button again to restart the unit.
	Water tank is not in place.	Push the water tank forward until it is in position and press "ICE" button again to restart the unit.
"Ice Full" indicator lights up or flash	There is too much ice.	Remove the ice cubes
	There are no ice cubes inside.	Verify by a qualified technician.
" Making Ice" indicator lights flash	The system is under repair	It will automatically resume work. When a problem like this occurs, please clean the icemaker carefully.
" Ice" indicator lights and "Making Ice" indicator flash	Ambient temperature or water temperature in inner tank is too high.	Please run the ice maker below 90 degrees Fahrenheit ambient and pour colder water into tank.
	Refrigerant liquid leakage.	Press the ICE button twice, restart ice making program, if this problem show up again,verify by a qualified technician.
	Cover motor is broken	
	Pipe in the cooling system is blocked.	
Making Ice too slowly	Hot Air outlet has been blocked by something.	Hot Air outlet must be guaranteed to have more than 15 CM of ventilation distance.
	Water temperature in inner tank is too high.	Water temperature requirement between 7℃-32℃ .
	Refrigeration system malfunctions	Please contact support@homyd.com
	Drain plug not in place	Put the drain plug in place.
Water leakage	Pipe Joint in the appliance may be loose	Please contact support@homyd.com
	The seal has reached service life	Please contact support@homyd.com

PORTABLE ICE MAKER

Instruction Manual

SKU: ZX-IM-16S-WM-HM

