

SIEMENS

Fridge-freezer

KG..N..

en User manual

Register your product on My Siemens and discover exclusive services and offers.
siemens-home.bsh-group.com/welcome

The future moving in.

Siemens Home Appliances

Futher information and explanations are available online:

Table of contents

1 Safety 4
1.1 General information 4
1.2 Intended use 4
1.3 Restriction on user group 4
1.4 Safe transport 4
1.5 Safe installation 5
1.6 Safe use 6
1.7 Damaged appliance 8

2 Preventing material damage 9

3 Environmental protection and saving energy 9
3.1 Disposing of packaging 9
3.2 Saving energy 9

4 Installation and connection 10
4.1 Scope of delivery 10
4.2 Criteria for the installation location 10
4.3 Installing the appliance 10
4.4 Preparing the appliance for the first time 10
4.5 Connecting the appliance to the electricity supply 11

5 Familiarising yourself with your appliance 12
5.1 Appliance 12
5.2 Control panel 13

6 Features 14
6.1 Shelf 14
6.2 Bottle shelf 14
6.3 Storage container 14
6.4 Fruit and vegetable container with humidity control 15
6.5 Butter and cheese compartment 15
6.6 Door rack 15
6.7 Accessories 15

7 Basic operation 16
7.1 Switching on the appliance 16
7.2 Operating tips 16
7.3 Switching off the appliance 16
7.4 Setting the temperature 16
7.5 Button lock (childproof lock) 17

8 Additional functions 17
8.1 Super cooling 17
8.2 Super freezing 17
8.3 Holiday mode 18
8.4 Energy-saving mode 18
8.5 Freshness mode 18

9 Alarm 18
9.1 Door alarm 18
9.2 Temperature alarm 19

10 Home Connect 19
10.1 Setting up Home Connect 20
10.2 Checking the signal strength 20
10.3 Installing updates for the Home Connect software 20
10.4 Resetting Home Connect settings 21
10.5 Remote diagnostics 21
10.6 Data protection 21

11 Refrigerator compartment 22
11.1 Tips for storing food in the refrigerator compartment 22
11.2 Chill zones in the refrigerator compartment 22

12 Freezer compartment 22
12.1 Freezing capacity 22
12.2 Fully utilising the freezer compartment volume 23
12.3 Tips for storing food in the freezer compartment 23
12.4 Tips for freezing fresh food 23
12.5 Shelf life of frozen food at −18 °C 23
12.6 Defrosting methods for frozen food 24

13 Defrosting 24
13.1 Defrosting in the freezer compartment 24

14 Cleaning and servicing 24
14.1 Preparing the appliance for cleaning 24
14.2 Cleaning the appliance 24
14.3 Removing the fittings 25
14.4 Removing appliance components 26

15 Troubleshooting 28
15.1 Power failure 32
15.2 Conducting an appliance self-test 32

16 Storage and disposal 32
16.1 Taking the appliance out of operation 32
16.2 Disposing of old appliance 33

17 Customer Service 33
17.1 Product number (E-Nr.) and production number (FD) 34

18 Technical data 34

19 Declaration of Conformity 34

1 Safety

Observe the following safety instructions.

1.1 General information

- Read this instruction manual carefully.
- Keep the instruction manual and the product information safe for future reference or for the next owner.
- Do not connect the appliance if it has been damaged in transit.

1.2 Intended use

Only use this appliance:
- for chilling and freezing food and for making ice cubes.
- In private households and in enclosed spaces in a domestic environment.
- Up to an altitude of 2000 m above sea level.

1.3 Restriction on user group

This appliance may be used by children aged 8 or over and by people who have reduced physical, sensory or mental abilities or inadequate experience and/or knowledge, provided that they are supervised or have been instructed on how to use the appliance safely and have understood the resulting dangers.
Do not let children play with the appliance.
Cleaning and user maintenance must not be performed by children unless they are being supervised.
Children above the age of three years old and younger than eight years old may load and unload the the fridge-freezer.

1.4 Safe transport

⚠ WARNING – Risk of injury!
The high weight of the appliance may result in injury when lifted.
▶ Do not lift the appliance on your own.

1.5 Safe installation

⚠ WARNING – Risk of electric shock!

Incorrect installation is dangerous.

- ▶ Connect and operate the appliance only in accordance with the specifications on the rating plate.
- ▶ Connect the appliance to a power supply with alternating current only via a properly installed socket with earthing.
- ▶ The protective conductor system of the domestic electrical installation must be properly installed.
- ▶ Never equip the appliance with an external switching device, e.g. a timer or remote control.
- ▶ When the appliance is installed, the mains plug of the power cord must be freely accessible. If free access is not possible, an all-pole isolating switch must be installed in the permanent electrical installation according to the installation regulations.
- ▶ When installing the appliance, check that the power cable is not trapped or damaged.

If the insulation of the power cord is damaged, this is dangerous.

- ▶ Never let the power cord come into contact with heat sources.

⚠ WARNING – Risk of explosion!

If the appliance's ventilation openings are sealed, a leak in the refrigeration circuit may result in a flammable mixture of gas and air.

- ▶ Keep ventilation openings, in the appliance enclosure or in the built-in structure, clear of obstruction.

⚠ WARNING – Risk of fire!

It is dangerous to use an extended power cord and non-approved adapters.

- ▶ Do not use extension cables or multiple socket strips.
- ▶ If the power cord is too short, contact Customer Service.
- ▶ Only use adapters approved by the manufacturer.

Portable multiple socket strips or portable power supply units may overheat and cause a fire.

- ▶ Do not place portable multiple socket strips or power supply units on the back of the appliance.

1.6 Safe use

⚠ WARNING – Risk of electric shock!
An ingress of moisture can cause an electric shock.
- ▶ Only use the appliance in enclosed spaces.
- ▶ Never expose the appliance to intense heat or humidity.
- ▶ Do not use steam- or high-pressure cleaners to clean the appliance.

⚠ WARNING – Risk of suffocation!
Children may put packaging material over their heads or wrap themselves up in it and suffocate.
- ▶ Keep packaging material away from children.
- ▶ Do not let children play with packaging material.

Children may breathe in or swallow small parts, causing them to suffocate.
- ▶ Keep small parts away from children.
- ▶ Do not let children play with small parts.

⚠ WARNING – Risk of explosion!
If the cooling circuit is damaged, flammable refrigerant may escape and explode.
- ▶ To accelerate the defrosting process, do not use any other mechanical devices or means other than those recommended by the manufacturer.
- ▶ If food is stuck to the freezer compartment, loosen it with a blunt implement such as the handle of a wooden spoon.

Products which contain flammable propellants and explosive substances may explode, e.g. spray cans.
- ▶ Do not store products which contain flammable propellants (e.g. spray cans) or explosive substances in the appliance.

⚠ WARNING – Risk of fire!
Electrical devices within the appliance may cause a fire, e.g. heaters or electric ice makers.
- ▶ Do not operate electrical devices within the appliance.

⚠ WARNING – Risk of injury!

Containers that contain carbonated drinks may burst.

- ▶ Do not store containers that contain carbonated drinks in the freezer compartment.

Injury to the eyes caused by escaping flammable refrigerant and hazardous gases.

- ▶ Do not damage the tubes of the refrigerant circuit or the insulation.

The appliance may tip.

- ▶ Do not stand or support yourself on the base, runners or doors.

⚠ WARNING – Risk of burns!

Individual parts on the back of the appliance become hot during operation.

- ▶ Never touch these hot parts.

⚠ WARNING – Risk of cold burns!

Contact with frozen food and cold surfaces may cause burns by refrigeration.

- ▶ Never put frozen food straight from the freezer compartment into your mouth.
- ▶ Avoid prolonged contact of the skin with frozen food, ice and surfaces in the freezer compartment.

⚠ CAUTION – Risk of harm to health!

To prevent food from being contaminated, you must observe the following instructions.

- ▶ If the door is open for an extended period of time, this may lead to a considerable temperature increase in the compartments of the appliance.
- ▶ Regularly clean the surfaces that may come into contact with food and accessible drain systems.
- ▶ Store raw meat and fish in suitable containers in the refrigerator so that they do not touch or drip on other food.
- ▶ If the fridge/freezer is empty for an extended period of time, switch off the appliance, defrost it, clean it and leave the door open to prevent the formation of mould.

Metal or metal-style parts in the appliance may contain aluminium. If acidic food comes into contact with aluminium in the appliance, aluminium foil ions may pass into the food.

- ▶ Do not consume soiled food.

1.7 Damaged appliance

⚠ WARNING – Risk of electric shock!

If the appliance or the power cord is damaged, this is dangerous.

- ▶ Never operate a damaged appliance.
- ▶ Never pull on the power cord to unplug the appliance. Always unplug the appliance at the mains.
- ▶ If the appliance or the power cord is damaged, immediately unplug the power cord or switch off the fuse in the fuse box.
- ▶ Call customer services. → *Page 33*

Incorrect repairs are dangerous.

- ▶ Repairs to the appliance should only be carried out by trained specialist staff.
- ▶ Only use genuine spare parts when repairing the appliance.
- ▶ If the power cord of this appliance is damaged, it must be replaced by the manufacturer, the manufacturer's Customer Service or a similarly qualified person in order to prevent any risk.

⚠ WARNING – Risk of fire!



If the tubes are damaged, flammable refrigerant and harmful gases may escape and ignite.

- ▶ Keep naked flames and ignition sources away from the appliance.
- ▶ Ventilate the room.
- ▶ Switch off the appliance. → *Page 16*
- ▶ Unplug the appliance from the mains or switch off the circuit breaker in the fuse box.
- ▶ Call after-sales service. → *Page 33*

2 Preventing material damage

ATTENTION!
If not rolling freely, the appliance's castors may damage the floor when the appliance is moved.
- ▸ Transport the appliance using a sack truck.
- ▸ Use floor protection when moving the appliance, and do not move it in a zigzag fashion.

Using the base, runners or appliance doors as a seat surface or climbing surface may damage the appliance.
- ▸ Do not stand or support yourself on the base, runners or doors.

Contamination with oil or fat may cause plastic parts and door seals to become porous.
- ▸ Keep plastic parts and door seals free of oil and grease.

Metal or metal-style parts in the appliance may contain aluminium. Aluminium reacts when it comes into contact with acidic foods.
- ▸ Do not store unpackaged food in the appliance.

3 Environmental protection and saving energy

3.1 Disposing of packaging

The packaging materials are environmentally compatible and can be recycled.
- ▸ Sort the individual components by type and dispose of them separately.

3.2 Saving energy

If you follow these instructions, your appliance will use less power.

Selecting the installation location

- Keep the appliance out of direct sunlight.
- Install the appliance as far away as possible from heating elements, cookers and other heat sources:
  - – Maintain a 30 mm clearance to electric or gas cookers.
  - – Maintain a 300 mm clearance to oil or solid-fuel cookers.
- Make sure there is a small gap between the side wall and the appliance.
- Never cover or block the external ventilation openings.

Saving energy during use

Note: The arrangement of the fittings does not affect the energy consumption of the appliance.

- Open the appliance only briefly and then close it carefully.
- Never cover or block the interior ventilation openings or the exterior ventilation openings.
- Transport purchased food in a cool bag and place in the appliance quickly.
- Allow warm food and drinks to cool down before storing them.
- Thaw frozen food in the refrigerator compartment to utilise the low temperature of the food.
- Always leave some space between the food and to the back panel.

Standby mode

If the appliance is not being used, the display automatically switches to standby mode.
In standby mode, the brightness of the control panel is reduced. The operation indicator remains illuminated.

4 Installation and connection

4.1 Scope of delivery

After unpacking all parts, check for any transport damage and for completeness of delivery.
If you have any complaints, contact your dealer or our after-sales service → *Page 33*.

The delivery consists of the following:
- Free-standing appliance
- Equipment and accessories[1]
- Installation material
- Installation instructions
- User manual
- Customer service directory
- Warranty enclosure[2]
- Energy label
- Information on energy consumption and noises
- Information about Home Connect

4.2 Criteria for the installation location

⚠ WARNING
Risk of explosion!
If the appliance is in a space that is too small, a leak in the refrigeration circuit may result in a flammable mixture of gas and air.
- ▸ Only install the appliance in a space with a volume of at least 1 m^3 per 8 g refrigerant. The volume of refrigerant is indicated on the rating plate. → *"Appliance", Fig.* **1**/6, *Page 13*

The weight of the appliance ex works may be up to 90 kg depending on the model.
The subfloor must be sufficiently stable to bear the weight of the appliance.

Permitted room temperature

The permitted room temperature depends on the appliance's climate class.
The climate class can be found on the rating plate. → *"Appliance", Fig.* **1**/6, *Page 13*

Climate class	Permitted room temperature
SN	10 °C to 32 °C
N	16 °C to 32 °C
ST	16 °C to 38 °C
T	16 °C to 43 °C

The appliance is fully functional within the permitted room temperature.
If an appliance with climate class SN is operated at colder room temperatures, the appliance will not be damaged up to a room temperature of 5 °C.

4.3 Installing the appliance

- ▸ Install the appliance in accordance with the enclosed installation instructions.

4.4 Preparing the appliance for the first time

1. Remove the informative material.
2. Remove the protective foil and transit bolts, e.g. remove the adhesive strips and carton.

[1] Depending on the appliance specifications

[2] Not in all countries

3. Clean the appliance for the first time. → *Page 24*

4.5 Connecting the appliance to the electricity supply

1. Insert the mains plug of the appliance's power cable in a socket nearby.

   The connection data of the appliance can be found on the rating plate. → *"Appliance", Fig.* **1**/6, *Page 13*
2. Check the mains plug is inserted properly.

✔ The appliance is now ready for use.

5 Familiarising yourself with your appliance

5.1 Appliance

You can find an overview of the parts of your appliance here.

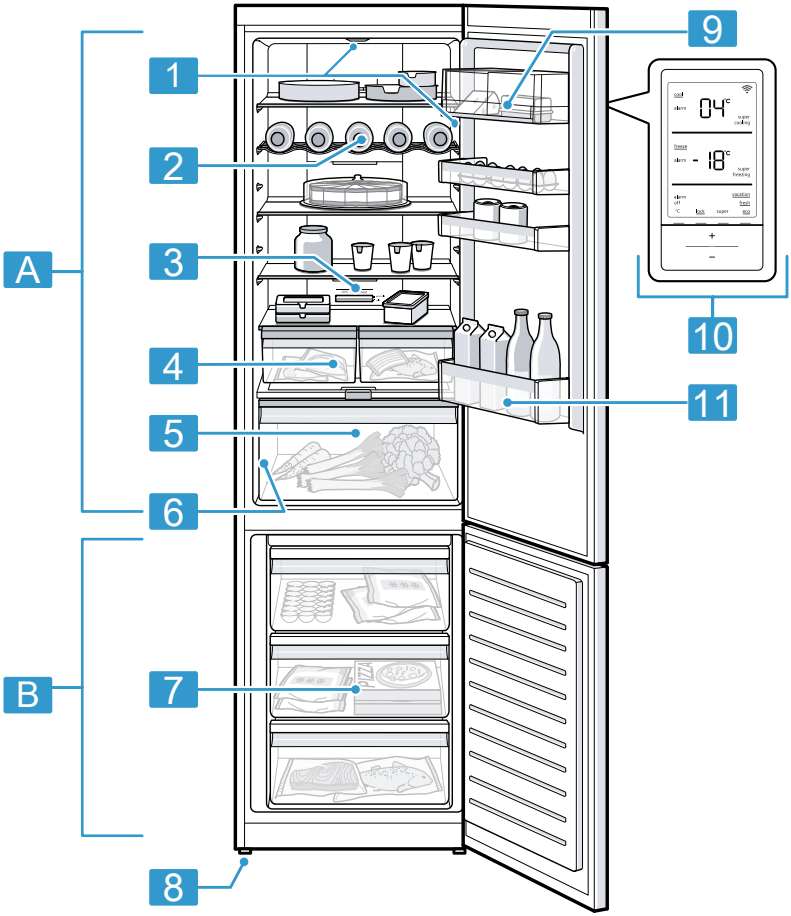

1

A	Refrigerator compartment → *Page 22*
B	Freezer compartment → *Page 22*

1	Lighting
2	Bottle shelf → *Page 14*
3	Temperature controller (storage container) → *Page 16*

4	Storage container → *Page 14*
5	Fruit and vegetable container with humidity control → *Page 15*
6	Rating plate → *Page 34*
7	Frozen food container → *Page 26*
8	Screw foot
9	Butter and cheese compartment → *Page 15*
10	Control panel
11	Door storage compartment for large bottles → *Page 15*

Note: Deviations between your appliance and the diagrams may differ with regard to their features and size.

5.2 Control panel

You can use the control panel to configure all functions of your appliance and to obtain information about the operating status.

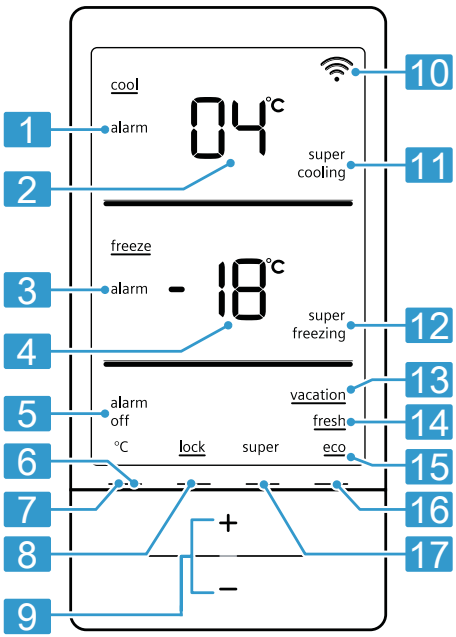

2

1	alarm appears when the door alarm is switched on.
2	Displays the set temperature for the refrigerator compartment in °C.
3	alarm appears when the temperature alarm or door alarm is switched on.
4	Displays the set temperature for the freezer compartment in °C.
5	alarm off appears when the alarm is switched on.
6	alarm off switches the warning signal off.
7	°C is used to select a compartment in order to change the temperature or switch on certain additional functions.
8	lock switches the button lock for the control panel on or off.
9	+/– sets the temperature of the selected compartment.
10	appears if user-defined settings have been set via the Home Connect app. You can find more information in the Home Connect app.
11	super cooling appears when Super cooling is switched on.
12	super freezing appears when Super freezing is switched on.
13	vacation is highlighted when holiday mode is switched on.
14	fresh is highlighted when the freshness mode is switched on.
15	eco is highlighted when the energy-saving mode is switched on.
16	vacation / fresh / eco is used to select a mode.
17	super switches super cooling and super freezing on or off in the selected compartment.

6 Features

The features of your appliance depend on the model.

6.1 Shelf

In order to achieve an improved overview and to remove food more quickly, pull out the shelf.
To vary the shelf as required, you can remove the shelf and re-insert it elsewhere.
→ *"Removing the shelf", Page 25*

6.2 Bottle shelf

Store bottles securely on the bottle shelf.
To vary the bottle shelf as required, you can remove the bottle shelf and re-insert it elsewhere.
→ *"Removing the shelf", Page 25*

6.3 Storage container

The temperatures in the storage container are lower than in the refrigerator compartment. Temperatures below 0 °C may occur occasionally.
In order to reach temperatures close to 0 °C in the storage container, set the refrigerator compartment temperature to 2 °C. → *Page 16*
Use the lower temperatures in the storage container to store highly perishable food, e.g. fish, meat and sausages.

6.4 Fruit and vegetable container with humidity control

Store fresh fruit and vegetables loose in the fruit and vegetable container. Cover any chopped fruit and vegetables, or store in air-tight packaging. You can adjust the humidity in the fruit and vegetable container using the humidity controller and a special seal. This allows fresh fruit and vegetables to be stored for up to twice as long as with conventional storage.

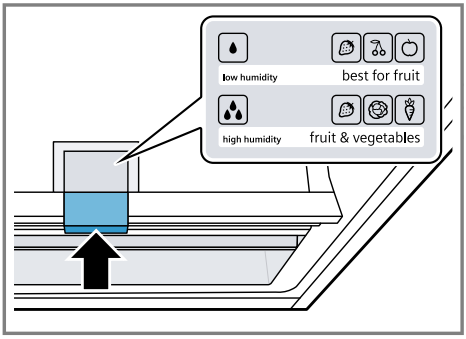

The air humidity in the fruit and vegetable container can be set according to the type and amount of food to be stored by pressing the humidity control:

- Low humidity ◆ required when primarily storing fruit or if the appliance is very full.
- High humidity ◆◆ required when primarily storing vegetables as well as when the appliance is filled with mixed items or is not very full.

Condensation may form in the fruit and vegetable container depending on the food and quantity stored. Remove the condensation with a dry cloth and adjust the air humidity in the vegetable container using the humidity controller.

To ensure that the quality and aroma are retained, store fruit and vegetables that are sensitive to cold outside of the appliance at temperatures of approx. 8 °C to 12 °C, e.g. pineapple, bananas, citrus fruits, cucumbers, courgettes, peppers, tomatoes and potatoes.

6.5 Butter and cheese compartment

Store butter and hard cheese in the butter and cheese compartment.

6.6 Door rack

To adjust the door racks as required, you can remove the door rack and re-insert elsewhere.
→ *"Removing door rack", Page 25*

6.7 Accessories

Use original accessories. These have been made especially for your appliance.
The accessories for your appliance depend on the model.

Egg tray

Store eggs safely on the egg tray.

Ice cube tray

Use the ice cube tray to make ice cubes.

Making ice cubes

Use only drinking water to make ice cubes.

1. Fill the ice cube tray with drinking water up to ¾ and place in the freezer compartment.

   If the ice cube tray is stuck to the freezer compartment, loosen it with a blunt implement only (e.g. spoon handle).

2. To loosen the ice cubes, twist the ice cube tray slightly or hold it briefly under flowing water.

7 Basic operation

7.1 Switching on the appliance

1. Electrically connect the appliance. → *Page 11*

   Note: If the appliance has been previously switched off using the control panel, press and hold + for ten seconds.

✔ The appliance begins to cool.

✔ A warning signal sounds, the temperature display (freezer compartment) flashes and alarm flashes because the freezer compartment is still too warm.

2. Switch off the warning signal using alarm off.

✔ alarm goes out as soon as the set temperature has been reached.

3. Set the required temperature. → *Page 16*

7.2 Operating tips

- Once you have switched on the appliance, the set temperature is only reached after several hours. Do not put any food in the appliance until the set temperature has been reached.
- The front panels of the housing are temporarily heated slightly. This prevents condensation in the area of the door seal.
- When you close the door, a vacuum may be created. The door is then difficult to open again. Wait a moment until the vacuum is offset.

7.3 Switching off the appliance

▸ Press and hold + for ten seconds.

7.4 Setting the temperature

Setting the refrigerator compartment temperature

1. Select the refrigerator compartment using °C.
2. Press +/– repeatedly until the temperature display (refrigerator compartment) shows the required temperature.

   To reach the set temperature, slide the temperature controller for the storage container to a position that is one third from the bottom. → *Page 16*

   The recommended temperature in the refrigerator compartment is 4 °C.

Setting the storage container temperature

1. To reduce the temperature, slide the temperature controller in the extra cold direction.
2. To increase the temperature, slide the temperature controller in the cold direction.

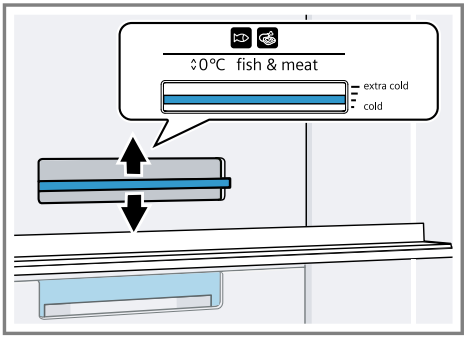

Setting the freezer compartment temperature

1. Select the freezer compartment with °C.
2. Press +/− repeatedly until the temperature display (freezer compartment) shows the required temperature.

   The recommended temperature in the freezer compartment is −18 °C.

7.5 Button lock (childproof lock)

The button lock prevents the appliance from being operated accidentally or incorrectly while running.

Switching on the button lock

- ▸ Press and hold lock for three seconds.
- ✔ lock appears.

Switching off the button lock

- ▸ Press and hold lock for three seconds.
- ✔ lock goes out.

8 Additional functions

8.1 Super cooling

With Super cooling, the refrigerator compartment cools as cold as possible.
Switch on Super cooling before placing large quantities of food.

Note: When Super cooling is switched on, increased noise may occur.

Switching on Super cooling

1. Select the refrigerator compartment using °C.
2. Press super.
- ✔ super cooling appears.

Note: After approx. 6 hours, the appliance switches to normal operation.

Switching off Super cooling

1. Select the refrigerator compartment using °C.
2. Press super.
- ✔ super cooling goes out.

8.2 Super freezing

With Super freezing, the freezer compartment cools as cold as possible. Switch on Super freezing four to six hours before placing food weighing 2 kg or more into the freezer compartment.
In order to utilise the freezer capacity, use Super freezing.
→ *"Prerequisites for freezing capacity", Page 23*

Note: When Super freezing is switched on, increased noise may occur.

Switching on Super freezing

1. Select the freezer compartment with °C.
2. Press super.
- ✔ super freezing appears.

Note: After approx. 60 hours, the appliance switches to normal operation.

Switching off Super freezing

1. Select the freezer compartment with °C.
2. Press super.
- ✔ super freezing goes out.

8.3 Holiday mode

If you are going to be away for a long time, you can switch on energy-saving holiday mode on the appliance.

⚠ CAUTION
Risk of harm to health!
The refrigerator compartment heats up while the holiday mode is switched on. The increased temperature may cause bacteria to increase and spoil the food.
- When the holiday mode is switched on, do not store any food in the refrigerator compartment.

The appliance automatically sets the temperatures.

Refrigerator compartment	14 °C
Freezer compartment	Temperature remains unchanged

Switching on holiday mode

- Press vacation / fresh / eco repeatedly until is vacation highlighted.

Switching off holiday mode

- Press vacation / fresh / eco repeatedly until no mode is highlighted.

8.4 Energy-saving mode

You can set the appliance to save energy with energy-saving mode. The appliance automatically sets the temperatures.

Refrigerator compartment	8 °C
Freezer compartment	−16 °C

Switching on energy-saving mode

- Press vacation / fresh / eco repeatedly until is eco highlighted.

Switching off energy-saving mode

- Press vacation / fresh / eco repeatedly until no mode is highlighted.

8.5 Freshness mode

In order to keep the food fresh for longer, you can switch on the freshness mode on the appliance.
The appliance automatically sets the temperatures.

Refrigerator compartment	2 °C
Freezer compartment	Temperature remains unchanged

Switching freshness mode on

- Press vacation / fresh / eco repeatedly until is fresh highlighted.

Switching off freshness mode

- Press vacation / fresh / eco repeatedly until no mode is highlighted.

9 Alarm

9.1 Door alarm

If the appliance door is open for a while, the door alarm switches on. A warning tone sounds and alarm appears for the affected compartment.

Switching off the door alarm

- Close the appliance door.
- ✔ The warning tone is switched off.

9.2 Temperature alarm

If the freezer compartment becomes too warm, the temperature alarm is switched on.
A warning tone sounds and the temperature display (freezer compartment) and alarm flash.

⚠ CAUTION
Risk of harm to health!
During the thawing process, bacteria may multiply and spoil the frozen food.
- ▶ Do not refreeze food after it has been defrosted or started to defrost.
- ▶ Refreeze food only after cooking.
- ▶ These items should no longer be stored for the maximum storage period.

The temperature alarm can be switched on in the following cases:
- The appliance is switched on.
  Do not store any food until the appliance has reached the set temperature.
- Large quantities of fresh food are being placed inside.
  Switch on Super freezing before placing large quantities of food in the appliance.
- The freezer compartment door is open for too long.
  Check whether the frozen food has defrosted or thawed.

Switching off the temperature alarm

- ▶ Press alarm off.
- ✔ The warning tone is switched off.
- ✔ The temperature display (freezer compartment) briefly indicates the warmest temperature reached in the freezer compartment. The temperature display (freezer compartment) then indicates the set temperature again.
- ✔ From this time on, the warmest temperature is measured again and saved.

10 Home Connect

This appliance can be networked. Connect your appliance to a Home Connect Wi-Fi dongle and then to a mobile device in order to control the functions via the Home Connect app.
The Home Connect services are not available in every country. The availability of the Home Connect function depends on the availability of Home Connect services in your country. You can find information about this at: www.home-connect.com.
To be able to use Home Connect, you must first set up the connection to the WLAN home network (Wi-Fi[1]) and to the Home Connect app.
After switching on the appliance, wait at least 2 minutes until internal device initialisation is complete. Only then should you set up Home Connect.

The Home Connect app guides you through the entire login process. Follow the instructions in the Home Connect app to configure the settings.

Tips
- Please consult the documents supplied by Home Connect.
- Please also follow the instructions in the Home Connect app.

[1] Wi-Fi is a registered trademark of the Wi-Fi Alliance.

Notes
- Please note the safety precautions in this instruction manual and make sure that they are also observed when operating the appliance via the Home Connect app.
→ *"Safety", Page 4*
- Operating the appliance on the appliance itself always takes priority. During this time it is not possible to operate the appliance using the Home Connect app.

10.1 Setting up Home Connect

Requirements
- The Home Connect Wi-Fi dongle is installed in accordance with the enclosed installation instructions. If there is no Home Connect Wi-Fi dongle included with your appliance, you can order the dongle from customer service.
- The Home Connect app has been installed on your mobile device.

1. Scan the QR code using the Home Connect app.



2. Follow the instructions in the Home Connect app.

10.2 Checking the signal strength

You should check the signal strength if no connection could be established.

1. Press super + lock at the same time.
✔ The temperature display (refrigerator compartment) shows Cn.
2. Press °C repeatedly until the temperature display (refrigerator compartment) shows SI.
✔ The temperature display (freezer compartment) shows a value between 0 (no reception) and 3 (full reception).

Note: The signal strength should be at least 2.

Improving the reception

If the signal strength is too weak, the connection may be interrupted.

▸ Carry out one of the solution options:
  – Place the router and refrigerator closer together.
  – Ensure that the connection is not interfered with by screening walls.
  – Install a repeater to strengthen the signal.

10.3 Installing updates for the Home Connect software

The appliance searches for updates to the Home Connect software at regular intervals.

Note: If updates are available, the temperature display (refrigerator compartment) shows UP.
To reset the update and the temperature display (refrigerator compartment) to the set temperature, press any touch field.

1. Press super + lock at the same time.
✔ The temperature display (refrigerator compartment) shows Cn.
2. Press °C repeatedly until the temperature display (refrigerator compartment) shows UP and the temperature display (freezer compartment) shows OF.
3. Press +.
✔ The temperature display (freezer compartment) shows an animation.
✔ The update is installed.
✔ The control panel is locked during the installation.
✔ If the installation is successful, the temperature display (freezer compartment) shows On.
4. If the temperature indicator (freezer compartment) shows Er, the appliance was unable to install the update.
   – Repeat the process at a later point.
5. If the update cannot be completed after several attempts, contact customer service → *Page 33* .

10.4 Resetting Home Connect settings

If your appliance experiences connection problems with the WLAN home network (Wi-Fi) or your appliance wants to log into a different WLAN home network (Wi-Fi), you can reset the Home Connect settings.

1. Press super + lock at the same time.
✔ The temperature display (refrigerator compartment) shows Cn.
2. Press °C repeatedly until the temperature display (refrigerator compartment) shows rE and the temperature display (freezer compartment) shows OF.
3. Press +.
✔ The temperature display (freezer compartment) shows an animation for 15 seconds.
✔ The temperature display (freezer compartment) shows OF.
✔ The Home Connect settings have been reset.

10.5 Remote diagnostics

Customer Service can use Remote Diagnostics to access your appliance if you contact them, have your appliance connected to the Home Connect server and if Remote Diagnostics is available in the country in which you are using the appliance.

Tip: For further information and details about the availability of Remote Diagnostics in your country, please visit the service/support section of your local website: www.home-connect.com

10.6 Data protection

Please see the information on data protection.
The first time your appliance is registered on a home network connected to the Internet, your appliance will transmit the following types of data to the Home Connect server (initial registration):

- Unique appliance identification (consisting of appliance codes as well as the MAC address of the Wi-Fi communication module installed).
- Security certificate of the Wi-Fi communication module (to ensure a secure data connection).
- The current software and hardware version of your appliance.
- Status of any previous reset to factory settings.

This initial registration prepares the Home Connect functions for use and is only required when you want to use the Home Connect functions for the first time.

Note: Please note that the Home Connect functions can only be utilised with the Home Connect app. Information on data protection can be retrieved in the Home Connect app.

11 Refrigerator compartment

You can keep meat, sausage, fish, dairy products, eggs, prepared meals and pastries in the refrigerator compartment.
The temperature can be set from 2 °C to 8 °C.
The refrigerator compartment can also be used to store highly perishable foods in the short to medium term. The lower the selected temperature, the longer the food remains fresh.

11.1 Tips for storing food in the refrigerator compartment

- Only store food when fresh and undamaged.
- Store food covered or in air-tight packaging.
- To avoid impeding the circulation of air and to prevent food from freezing, do not place food in front of the inner ventilation openings or directly against the back wall.
- Allow hot food and drinks to cool down first before placing in the appliance.
- Observe the best-before date or use-by date specified by the manufacturer.

11.2 Chill zones in the refrigerator compartment

The air circulation in the refrigerator compartment creates different chill zones.

Coldest zone

The coldest zone is in the storage container.

Tip: Store highly perishable food such as fish, sausages and meat in the coldest zone.

Warmest zone

The warmest zone is at the very top of the door.

Tip: Store food that does not spoil easily in the warmest zone, e.g. hard cheese and butter. Cheese can then continue to release its aroma and the butter will still be easy to spread.

12 Freezer compartment

You can store frozen food, freeze food and make ice cubes in the freezer compartment.
The temperature can be set from −16 °C to −24 °C.
Long-term storage of food should be at −18 °C or lower.
The freezer compartment can be used to store perishable food long-term. The low temperatures slow down or stop the spoilage.

12.1 Freezing capacity

The freezing capacity indicates the quantity of food that can be frozen right through to the centre within a specific period of time.
Information on freezing capacity can be found on the rating plate. → *"Appliance", Fig.* **1**/6, *Page 13*

Prerequisites for freezing capacity

1. Approx. 24 hours before placing fresh food in the appliance, switch on Super freezing.
   → *"Switching on Super freezing", Page 17*
2. Place food in the bottom frozen food container first.

12.2 Fully utilising the freezer compartment volume

Learn how to store the maximum amount of frozen food in the freezer compartment.

1. Remove all fittings from the freezer compartment. → *Page 25*
2. Store food directly on the shelves and on the floor of the freezer compartment.

12.3 Tips for storing food in the freezer compartment

- Store food in air-tight packaging.
- Do not bring food which is to be frozen into contact with frozen food.
- Place the food over the whole area of the frozen food containers.
- To quickly and gently freeze larger quantities of fresh food, place this in the bottom frozen food container.
- To ensure that the air can circulate freely in the appliance, push the frozen food containers in as far as they will go.

12.4 Tips for freezing fresh food

- Freeze fresh and undamaged food only.
- Freeze food in portions.
- Cooked food is more suitable than food that can be eaten raw.
- Vegetables: Wash, chop up and blanch before freezing.
- Fruit: Wash, pit and perhaps peel, possibly add sugar or ascorbic acid solution.
- Food that is suitable for freezing includes baked items, fish and seafood, meat, game, poultry, eggs without shells, cheese, butter and quark, ready meals and leftovers.
- Food that is unsuitable for freezing includes lettuce, radishes, eggs in shells, grapes, raw apples and pears, yoghurt, sour cream, crème fraîche and mayonnaise.

Packing frozen food

If you select suitable packaging material and the correct type of packaging, you can determine the product quality and prevent freezer burn.

1. Place the food in the packaging.
2. Squeeze out the air.
3. Pack food airtight to prevent it from losing flavour and drying out.
4. Label the packaging with the contents and the date of freezing.

12.5 Shelf life of frozen food at –18 °C

Food	Storage time
Fish, sausages, prepared meals and baked goods	up to 6 months
Poultry, meat	up to 8 months
Vegetables, fruit	up to 12 months

The imprinted freezer calendar indicates the maximum storage duration in months at a constant temperature of –18 °C.

12.6 Defrosting methods for frozen food

⚠ CAUTION
Risk of harm to health!
During the thawing process, bacteria may multiply and spoil the frozen food.
- ▸ Do not refreeze food after it has been defrosted or started to defrost.
- ▸ Refreeze food only after cooking.
- ▸ These items should no longer be stored for the maximum storage period.

- ■ Defrost animal-based food, such as fish, meat, cheese, quark, in the refrigerator compartment.
- ■ Defrost bread at room temperature.
- ■ Prepare food for immediate consumption in the microwave, in the oven or on the hob.

13 Defrosting

13.1 Defrosting in the freezer compartment

The fully automatic NoFrost system ensures that the freezer compartment remains frost-free. Defrosting is not required.

14 Cleaning and servicing

To keep your appliance working efficiently for a long time, it is important to clean and maintain it carefully. Customer Service must clean inaccessible points. Cleaning by customer service can give rise to costs.

14.1 Preparing the appliance for cleaning

1. Switch off the appliance.
   → *Page 16*
2. Disconnect the appliance from the power supply.
   Unplug the appliance from the mains or switch off the circuit breaker in the fuse box.
3. Take out all of the food and store it in a cool place.
   Place ice packs (if available) onto the food.
4. Remove all fittings and accessories from the appliance.
   → *Page 25*
5. Remove the shelf above the fruit and vegetable container.
   → *Page 26*

14.2 Cleaning the appliance

⚠ WARNING
Risk of electric shock!
An ingress of moisture can cause an electric shock.
- ▸ Do not use steam- or high-pressure cleaners to clean the appliance.

Liquid in the lighting, controls or inner ventilation openings can be dangerous.
- ▸ The rinsing water must not drip into the lighting, controls or inner ventilation openings.

ATTENTION!
Unsuitable cleaning products may damage the surfaces of the appliance.
- ▸ Do not use hard scouring pads or cleaning sponges.
- ▸ Do not use harsh or abrasive detergents.
- ▸ Do not use cleaning products with a high alcohol content.

If you clean fittings and accessories in the dishwasher, this may cause them to become deformed or discolour.

- ▸ Never clean fittings and accessory in the dishwasher.

1. Prepare the appliance for cleaning. → *Page 24*
2. Clean the appliance, the fittings, the accessories and the door seals with a dish cloth, lukewarm water and a little pH-neutral washing-up liquid.
3. Dry thoroughly with a soft, dry cloth.
4. Insert the fittings and install the appliance components.
5. Electrically connect the appliance.
6. Putting the food into the appliance.

14.3 Removing the fittings

If you want to clean the fittings thoroughly, remove these from your appliance.

Removing the shelf

- ▸ Pull out, life and remove the shelf.

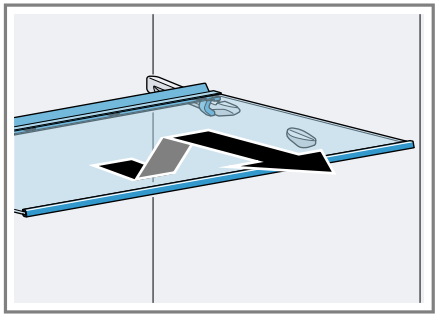

Removing door rack

- ▸ Lift the door rack and remove it.

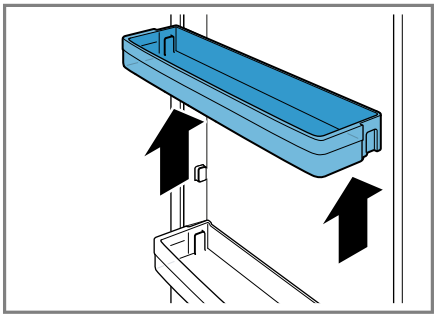

Removing the storage container

- ▸ Lower the storage container at the front ① and remove it ②.

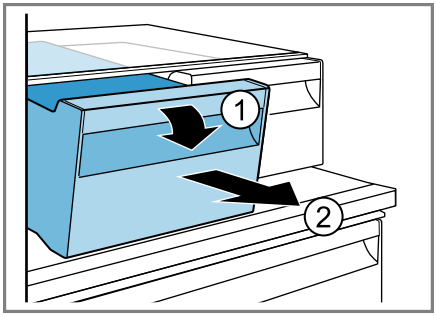

Removing the fruit and vegetable container

1. Pull out the fruit and vegetable container as far as it will go.

2. Lift the fruit and vegetable container at the front ① and remove it ②.

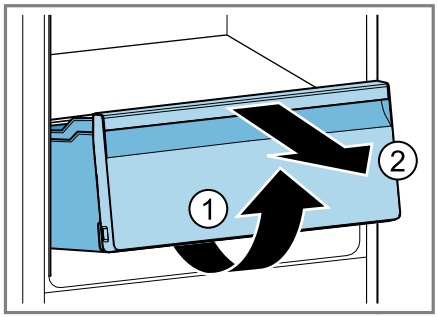

Removing the frozen food container

1. Take out the frozen food container as far as it will go.
2. Lift the frozen food container at the front ① and remove it ②.

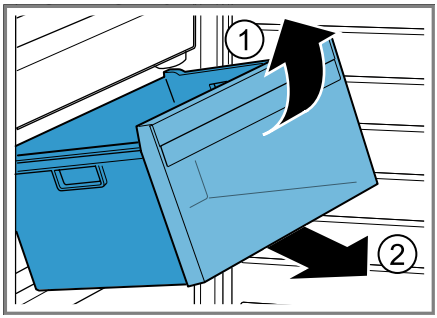

Removing the front of the container

You can remove the front of the fruit and vegetable container to facilitate cleaning.

- Press in the snap-in hooks on the side of the container ① and remove the front from the container in a turning motion ②.

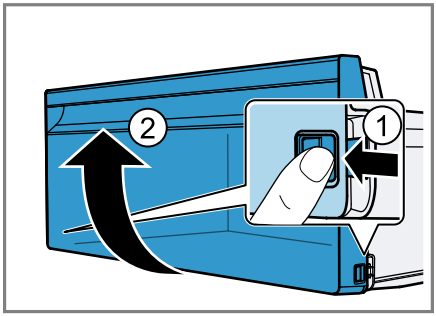

14.4 Removing appliance components

If you want to clean your appliance thoroughly, you can remove certain components from your appliance.

Shelf above the fruit and vegetable container

You can remove the cover of the fruit and vegetable container in order to clean it thoroughly.

Removing the shelf above the fruit and vegetable container

1. Remove the fruit and vegetable container. → *Page 25*
2. Remove the storage container. → *Page 25*

3. Tilt the shelf above the fruit and vegetable container to the side ① and remove it ②.

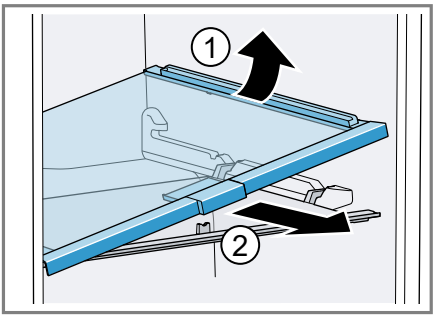

4. Lift the fruit and vegetable container cover ① and remove it ②.

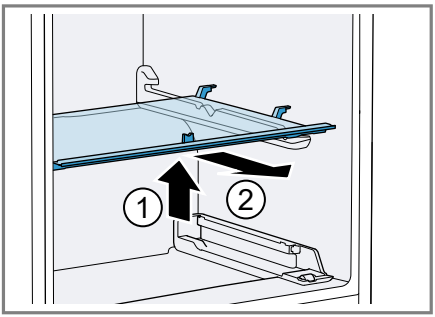

Fitting the shelf above the fruit and vegetable container

1. Clip the fruit and vegetable container cover in place.

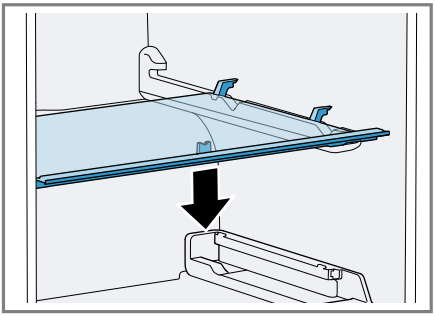

2. Tilt the shelf above the fruit and vegetable container to one side to insert it ① and then lower ②.

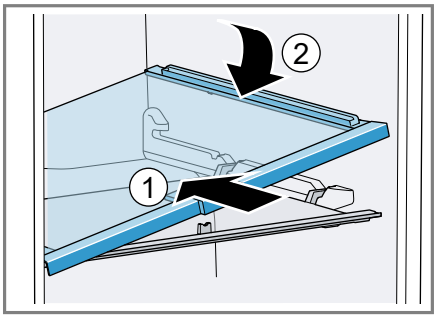

3. Move the humidity controller to the front.

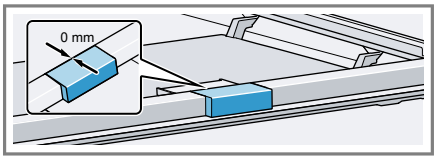

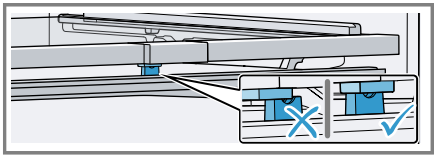

Make sure that the fruit and vegetable container cover sits in the opening under the humidity controller.

4. Insert the storage containers and the fruit and vegetable container.

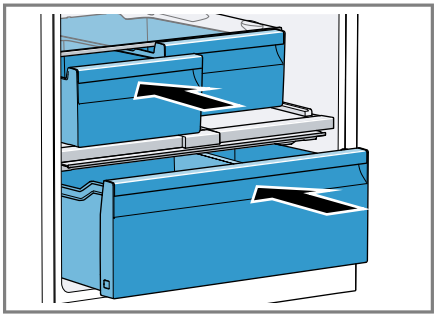

15 Troubleshooting

You can rectify minor faults on your appliance yourself. Read the troubleshooting information before contacting after-sales service. This will avoid unnecessary costs.

⚠ WARNING
Risk of electric shock!
Incorrect repairs are dangerous.
- ▸ Repairs to the appliance should only be carried out by trained specialist staff.
- ▸ Only use genuine spare parts when repairing the appliance.
- ▸ If the power cord of this appliance is damaged, it must be replaced by the manufacturer, the manufacturer's Customer Service or a similarly qualified person in order to prevent any risk.

Fault	Cause and troubleshooting
The appliance is not cooling, the displays and lighting are lit.	Showroom mode is switched on. 1. Press and hold °C + + for 5 seconds until an audible signal sounds. 2. After a short time, check whether your appliance is cooling.
The LED lighting does not work.	Different causes are possible. ▸ Call customer service. The customer service number can be found in the enclosed customer service directory.
Side panels of the appliance are warm.	Not a fault. The side panels contain pipes which heat up during the cooling process. Units touching the appliance will not be damaged by the heat. No action required.
HomeConnect is not working correctly.	Different causes are possible. ▸ Go to www.home-connect.com.
E or d appears in the temperature display.	The electronics have detected a fault. 1. Switch off the appliance. → *Page 16* 2. Disconnect the appliance from the mains. Unplug the appliance from the mains or switch off the circuit breaker in the fuse box. 3. Reconnect the appliance after five minutes. 4. Switch on the appliance. → *Page 16* 5. If the message still appears on the display, call customer service. The customer service number can be found in the enclosed customer service directory.

Fault	Cause and troubleshooting
A warning tone sounds and the temperature display (freezer compartment) and alarm flash. The temperature alarm is switched on.	Different causes are possible. ▸ Press alarm off. ✔ The temperature display (freezer compartment) briefly indicates the warmest temperature reached in the freezer compartment. The temperature display (freezer compartment) then indicates the set temperature again. ✔ The alarm is switched off. ✔ alarm off lights up until the set temperature is reached.
	External ventilation openings are covered up. ▸ Remove any obstructions from in front of the external ventilation openings.
	Larger quantities of fresh food have been put in. ▸ Do not exceed the max. freezing capacity. → *"Freezing capacity", Page 22*
A warning tone sounds and alarm appears for the refrigerator compartment or freezer compartment. The door alarm is switched on.	The appliance door is open. ▸ Close the appliance door.

Fault	Cause and troubleshooting
The set temperature is not reached. Fully automatic defrosting no longer works.	The freezer compartment door was open for a long time. The evaporator (refrigeration unit) in the noFrost system is heavily iced up. **Requirement:** Store the frozen food well insulated in a cool place. 1. Switch off the appliance. → *Page 16* 2. Disconnect the appliance from the mains. Unplug the appliance from the mains or switch off the circuit breaker in the fuse box. 3. Move the appliance away from the wall. 4. Leave the appliance door open. ✔ After approx. 20 minutes, the condensation starts to run into the evaporation pan at the rear of the appliance. 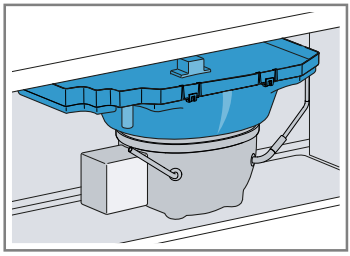 5. To prevent the evaporation pan from overflowing, mop up the condensation water with a sponge. The evaporator is defrosted if no more condensation water runs into the evaporation pan. 6. Clean the interior of the appliance. → *Page 24* 7. Switch the appliance back on. → *Page 16*
The temperature differs greatly from the setting.	Different causes are possible. 1. Switch off the appliance. → *Page 16* 2. Switch the appliance back on after five minutes. → *Page 16* – If the temperature is too warm, check the temperature again after a couple of hours. – If the temperature is too cold, check the temperature again on the following day.
Condensation accumulates on the surface of the appliance and on the shelves inside.	The water contained in warm and humid air condenses on the colder surfaces of the appliance. 1. Wipe away the water with a soft, dry cloth. 2. Open the appliance as briefly as possible. 3. Ensure that the appliance is always closed properly.

Fault	Cause and troubleshooting
The appliance hums, bubbles, buzzes, gargles, clicks or crackles.	Not a fault. A motor is running, e.g. refrigerating unit, fan. Refrigerant flows through the pipes. The motor, switches or solenoid valves are switching on or off. Automatic defrosting is running. No action required.
The appliance makes noises.	The appliance is not level. ▸ Align the appliance using a spirit level and the screw feet.
	The appliance is not free-standing. ▸ Observe the minimum clearances for the appliance.
	Fittings wobble or stick. ▸ Check the removable fittings and, if required, replace these.
	Bottles or containers are touching. ▸ Move the bottles or containers away from each other.
	Super freezing is switched on. No action required.

15.1 Power failure

During a power failure, the temperature in the appliance rises; this reduces the storage time and the quality of the frozen food.
On the website for your appliance, the technical data provides you with the storage times for frozen food in the event of a fault.

Notes
- Open the appliance as little as possible during a power failure and do not place any other food in the appliance.
- Check the quality of the food immediately after a power failure.
  – Dispose of any frozen food that has defrosted and is hotter than 5 °C.
  – Cook or fry slightly thawed frozen food, and then either consume it or freeze it again.

15.2 Conducting an appliance self-test

1. Switch off the appliance. → *Page 16*
2. Disconnect the appliance from the power supply.

   Unplug the appliance from the mains or switch off the circuit breaker in the fuse box.
3. Electrically reconnect the appliance after five minutes.
4. Switch on the appliance. → *Page 16*
5. Within the first 10 seconds after connecting to the power supply, press and hold °C + − for three to five seconds until an audible signal sounds.

✔ The appliance self-test starts.
✔ If, at the end of the appliance self-test, two audible signals sound and the temperature display indicates the set temperature, your appliance is OK. The appliance switches to normal operation.
✔ If, at the end of the appliance self-test, five audible signals sound, inform customer service.

16 Storage and disposal

You can find out here how to prepare your appliance for storage. You will also find out how to dispose of old appliances.

16.1 Taking the appliance out of operation

1. Switch off the appliance. → *Page 16*
2. Disconnect the appliance from the power supply.

   Unplug the appliance from the mains or switch off the circuit breaker in the fuse box.
3. Remove all of the food.
4. Clean the appliance. → *Page 24*
5. **ATTENTION!** Objects jammed between the door and the housing may damage the door hinge.

▶ Open the door until it remains open by itself.
▶ Do not insert any objects between the door and the housing.

To guarantee the ventilation inside the appliance, leave the appliance open.

16.2 Disposing of old appliance

Valuable raw materials can be reused by recycling.

⚠ WARNING
Risk of harm to health!
Children can lock themselves in the appliance, thereby putting their lives at risk.
- ▸ Leave shelves and containers inside the appliance to prevent children from climbing in.
- ▸ Keep children away from the redundant appliance.

⚠ WARNING
Risk of fire!
If the tubes are damaged, flammable refrigerant and harmful gases may escape and ignite.
- ▸ Do not damage the tubes of the refrigerant circuit or the insulation.

1. Unplug the appliance from the mains.
2. Cut through the power cord.
3. Dispose of the appliance in an environmentally friendly manner.

   Information about current disposal methods are available from your specialist dealer or local authority.



This appliance is labelled in accordance with European Directive 2012/19/EU concerning used electrical and electronic appliances (waste electrical and electronic equipment - WEEE). The guideline determines the framework for the return and recycling of used appliances as applicable throughout the EU.

17 Customer Service

If you have any queries, are unable to rectify faults on the appliance yourself or if your appliance needs to be repaired, contact Customer Service. Function-relevant genuine spare parts according to the corresponding Ecodesign Order can be obtained from Customer Service for a period of at least 10 years from the date on which your appliance was placed on the market within the European Economic Area.

Note: Under the terms of the manufacturer's warranty applicable to the location, the use of Customer Service is free of charge. The minimum duration of the warranty (manufacturer's warranty for private consumers) in the European Economic Area is 2 years according to the terms of warranty applicable to the location. The terms of warranty do not affect other rights or claims held by yourself under local legislation.

Detailed information on the warranty period and terms of warranty in your country is available from our aftersales service, your retailer or on our website.
If you contact Customer Service, you will require the product number (E-Nr.) and the production number (FD) of your appliance.
The contact details for Customer Service can be found in the enclosed Customer Service directory or on our website.

17.1 Product number (E-Nr.) and production number (FD)

You can find the product number (E-Nr.) and the production number (FD) on the appliance's rating plate.
→ *"Appliance", Fig.* **1**/6, *Page 13*
Make a note of your appliance's details and the Customer Service telephone number to find them again quickly.

18 Technical data

Refrigerant, cubic capacity and further technical specifications can be found on the rating plate.
→ *"Appliance", Fig.* **1**/6, *Page 13*
This product contains a light source from energy efficiency class F. The light source is available as a spare part and should only be replaced by trained specialist staff.
This product contains a second light source from energy efficiency class F. The light source is available as a spare part and should only be replaced by trained specialist staff.
You can find more information about your model online at https://eprel.ec.europa.eu/[1]. This web address is linked to the official EU EPREL product database. Please then follow the instructions on searching for the model. The model identifier is made up of the characters before the slash in the product number (E-Nr.) on the rating plate. Alternatively, you can also find the model identifier in the first line of the EU energy label.

19 Declaration of Conformity

BSH Hausgeräte GmbH hereby declares that the appliance with Home Connect functionality conforms to the basic requirements and other relevant provisions of Directive 2014/53/EU.
A detailed RED Declaration of Conformity can be found online at www.siemens-home.bsh-group.com among the additional documents on the product page for your appliance.

CE

Hereby, BSH Hausgeräte GmbH declares that the appliance with Home Connect functionality is in compliance with relevant statutory requirements.[2]
A detailed Declaration of Conformity can be found online at www.siemens-home.bsh-group.com/uk/ among the additional documents on the product page for your appliance.[2]

UK CA

Only applies to Great Britain

2.4 GHz band (2400–2483.5 MHz): Max. 100 mW

[1] Only applies to countries in the European Economic Area

[2] Only applies to Great Britain

BSH Hausgeräte GmbH
Carl-Wery-Straße 34
81739 München
GERMANY
www.siemens-home.bsh-group.com

Valid within Great Britain:
Imported to Great Britain by
BSH Home Appliances Ltd.
Grand Union House
Old Wolverton Road
Wolverton, Milton Keynes
MK12 5PT
United Kingdom

Manufactured by BSH Hausgeräte GmbH under the trademark licence of Siemens AG

9001680170 (011129)
en