Vinotemp®

WINE CELLAR

INSTRUCTION MANUAL

VT34

ENGLISH

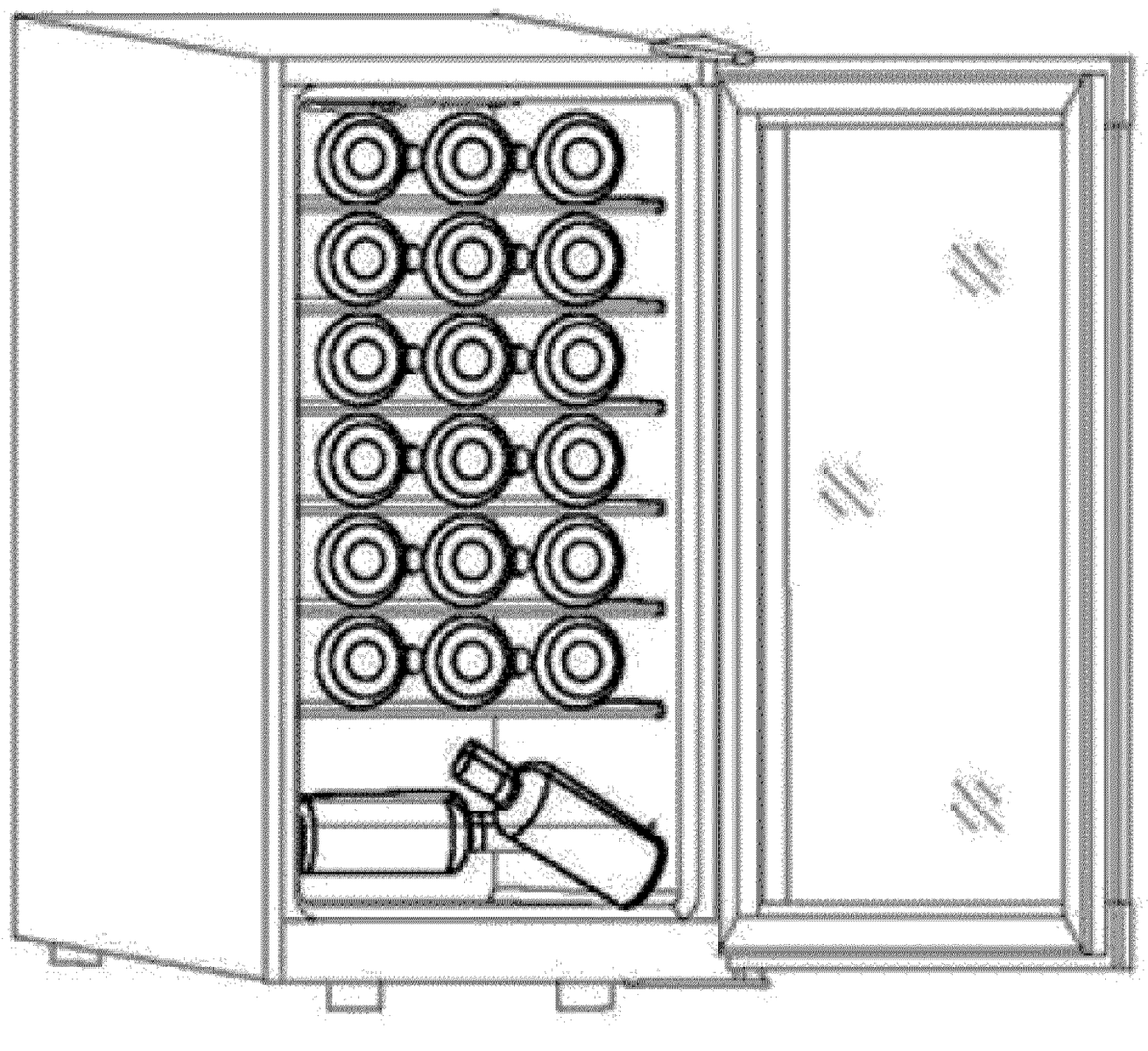

WWW.VINOTEMP.COM

CONTENT

Parts and Identification 1
Safety Instructions 1
Changing Door 2
Instructions of Installation 2
Before Use 2
Installation 2
Operation of the Wine Cellar 3
Temperature Control 3
Light Control 4
Light Bulb Replacement 4
Maintenance 4
Cleaning 4
Power Failure 4
Non Usage for an Extended Time 4
Moving the Wine Cellar 5
Drip Pan 5
Troubleshooting Guide 5
Wine Cellar Does Not Work 5
Wine Cellar Is Not Cold Enough 5
Noise or Vibration 5
Compressor Turns On and Off Frequently 6
The Light Does Not Work 6
The Door Could not Close Properly 6
Circuit Diagram 7
Limited Warranty 7

PARTS AND IDENTIFICATION

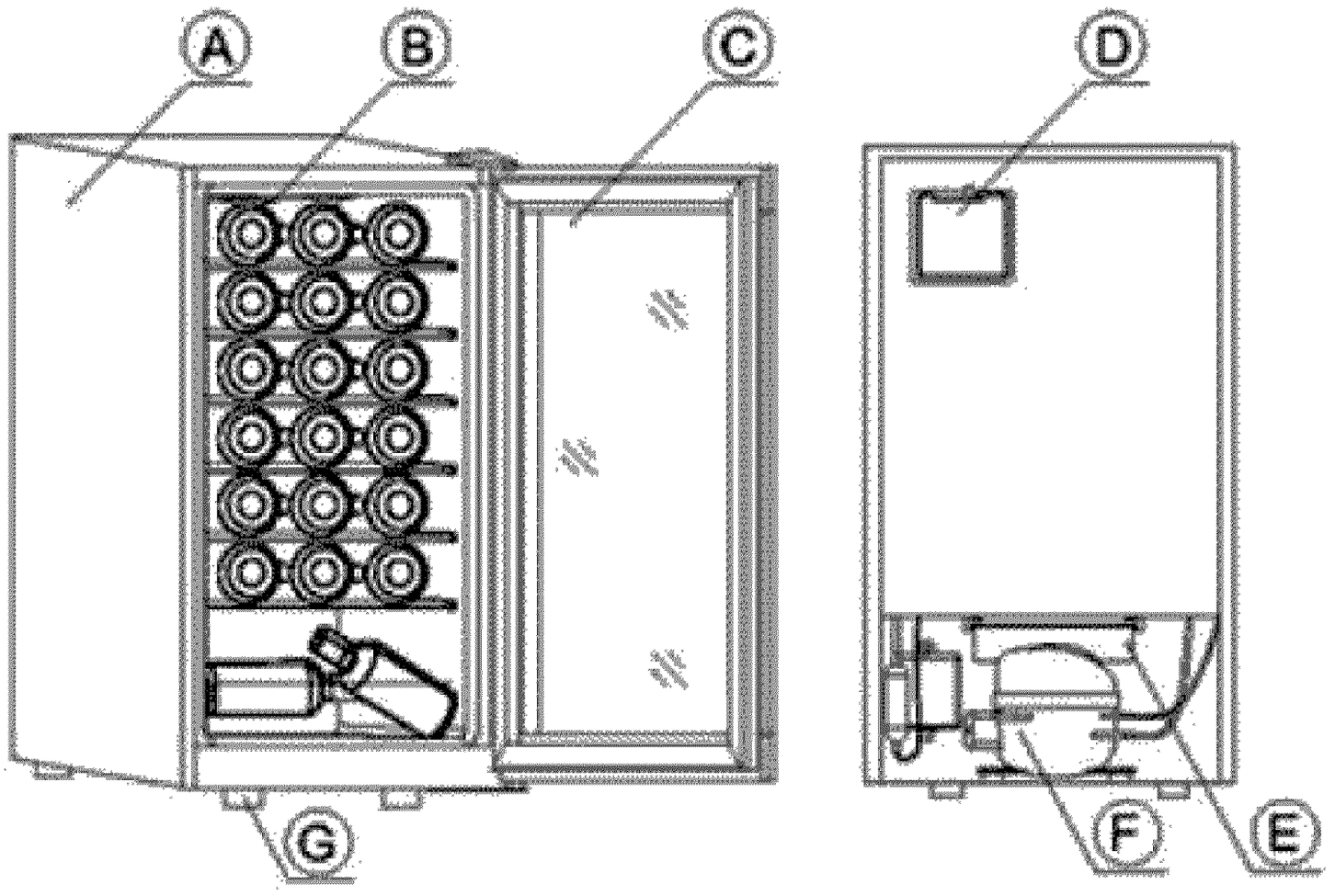

A. Cabinet
B. Rocker Switch
C. Glass Door
D. Thermostat
E. Drip Pan
F. Compressor
G. Adjusting Leg

SAFETY INSTRUCTIONS

Warning:

To reduce the risk of fire, electric shock, or injury when using your wine cellar, please note the following basic precautions:

- Before using, read all instructions.
- Child entrapment and suffocation are dangerous, before you throw away your old wine cellar: take off the door, leave the shelves in place so that children may not easily climb inside.
- Never clean appliance parts with flammable fluids. Also do not store or use gasoline or any other flammable vapors and liquids in the vicinity of this or any other appliance. The fumes can create a fire or explosion.

CHANGING DOOR

The door of the wine cellar could be opened either from the left or right side. The cellar delivered to you is installed on the left side.

If you want to reverse the open direction of door, please do as follows:

1. Remove the hinge cover on top right side of the cellar, then remove the bolts and take off the hinge, and put them to the side.
2. Remove the bolts from the left side top of the cellar and insert them into the hole on the right side.
3. Take off the door accordingly and put it to the side gently.
4. Remove the hinge bracket on bottom right side of cellar, flip the bracket over and then transfer it to the opposite side. Make certain the leveling legs are properly adjusted.
5. Install the door. (Note: the door must be upside down to insure proper installation).
6. Install the hinge on the top right side of the cellar, screw the bolts tightly, and then install the hinge cover.

INSTRUCTIONS OF INSTALLATIONS

Before Use

- Remove all the packing materials before using your wine cellar.
- Let the wine cellar stand upright for about 24 hours before connecting power.
- Clean the interior surface with a soft cloth and lukewarm water.

Installation:

- Make certain the wine cellar is on a solid horizontal surface. Adjust the legs properly to insure this appliance is level.
- Leave some space (about 5 inches) between the back and sides of the cellar to allow proper ventilation of the compressor.

US-WZ24H2B-SS VT

- Do not place the cellar in moist areas. Too much moisture will cause the evaporator to frost quickly and cause condensation to form on the glass door.
- Keep the cellar away from direct sunlight or other sources of heat. Also avoid operating the cellar in extreme cold temperature environments.
- Plug the cellar into an exclusive, properly grounded wall outlet. Any problems concerning power or grounding should be directed to a qualified electrician or please contact your local dealer.
- Improper use of the grounding plug can result in the risk of electrical shock. If the power cord is damaged, please replace it with an identical replacement plug or please contact your local dealer.
- Not designed for application in the garage or extreme external temperatures. Not intended for installation in the garage or basement.

OPERATION OF THE WINE CELLAR

Temperature Control

- "OFF", "MIN", "NORMAL" and "MAX" are the four settings of the temperature control.
- Set the temperature control to "MAX" position when you use the cellar for the first time.
- 20 minutes later, adjust the temperature control to "NORMAL" position.
- Turning the temperature control to "OFF" position could stop the cooling cycle, but will not shut off power to the wine cellar.
- If the cellar is turned off, unplugged or power lost, you must wait 3~5 minutes before restarting it.
- The temperature range between "MIN" and "MAX" (48°F~61°F) is ideal for the storage of wines.

Light Control :

The inside light is controlled by the on/off rocker switch.

Light Bulb Replacement :

- Unplug the cellar or cut off power before removing the bulb.
- Remove the screw.
- Remove the bulb cover gently.
- Remove the bulb.
- Replace with a 10 watt refrigerator bulb in the same size and shape.
- Install the bulb cover and tighten the screw.

MAINTENANCE

Cleaning:

- Turn the temperature control to "OFF" position. Unplug the cellar and take out all the bottles.
- Clean the interior surface of cellar with warm water and baking soda solution.
- Clean the exterior surface of cellar with mild detergent solution and warm water.
- The bottom part of the storage area also needs to be cleaned periodically.

Power Failure:

Please minimize the frequency of opening the door during a power failure. Most power failures are corrected within a few hours and the temperature of your wine cellar will not be affected.

If the power will be off for an extended period, proper procedure should be followed for the stored wines.

Non Usage for an Extended Time:

If your wine cellar is unused for extended period, it is best to remove the bottles, unplug and clean your cellar. Also please open

the door to avoid possible formation of condensation, mould or odors.

Moving the Wine Cellar:

- Take out all the bottles.
- Secure all loose parts inside the cellar.
- Tape the door shut.
- During transportation, make sure that the wine cellar is in the upright position.

Drip Pan:

- When the compressor stops working, water drops will drain through the outlet in the inner back wall into the drain pan (above the compressor).
- If the drain pan needs to be cleaned, pull the drain pan forward gently and reinstall it after cleaning.

TROUBLESHOOTING GUIDE

If your cellar does not work properly, please note the following suggestions before you attempt to repair.

Wine Cellar Does Not Work:

No power or wine cellar is not plugged in.

The circuit breaker is tripped or the fuse is blown.

The temperature control is set at "OFF" position.

Wine Cellar Is Not Cold Enough:

Check to make sure that the temperature control is set at "NORMAL" position.

The door is opened too frequently.

The door is not closed properly.

The door gasket is not sealed well.

There is insufficient clearance around the cellar.

Noise or Vibration:

The cellar is not leveled properly.

VTSHD28-S0

It is normal to hear gurgling sounds caused by the flow of refrigerant when each cooling cycle ends.

Check for possible loose parts.

Compressor Turns On and Off Frequently:

The room temperature is higher than normal.

The door is not closed completely.

The door is opened too frequently.

The cycling frequency will reduce when all the bottles reach the set temperature.

The temperature is not set properly.

The door gasket is not sealed well.

There is insufficient clearance around the cellar.

The Light Does Not Work:

There is no power or the cellar is not plugged in.

The circuit breaker is tripped or the fuse is blown.

The light bulb is burned out.

The switch is on "OFF" position.

The Door Could Not Close Properly:

The wine cellar is not leveled properly.

The door gasket is obstructed.

The shelves are not in the proper position.

CIRCUIT DIAGRAM

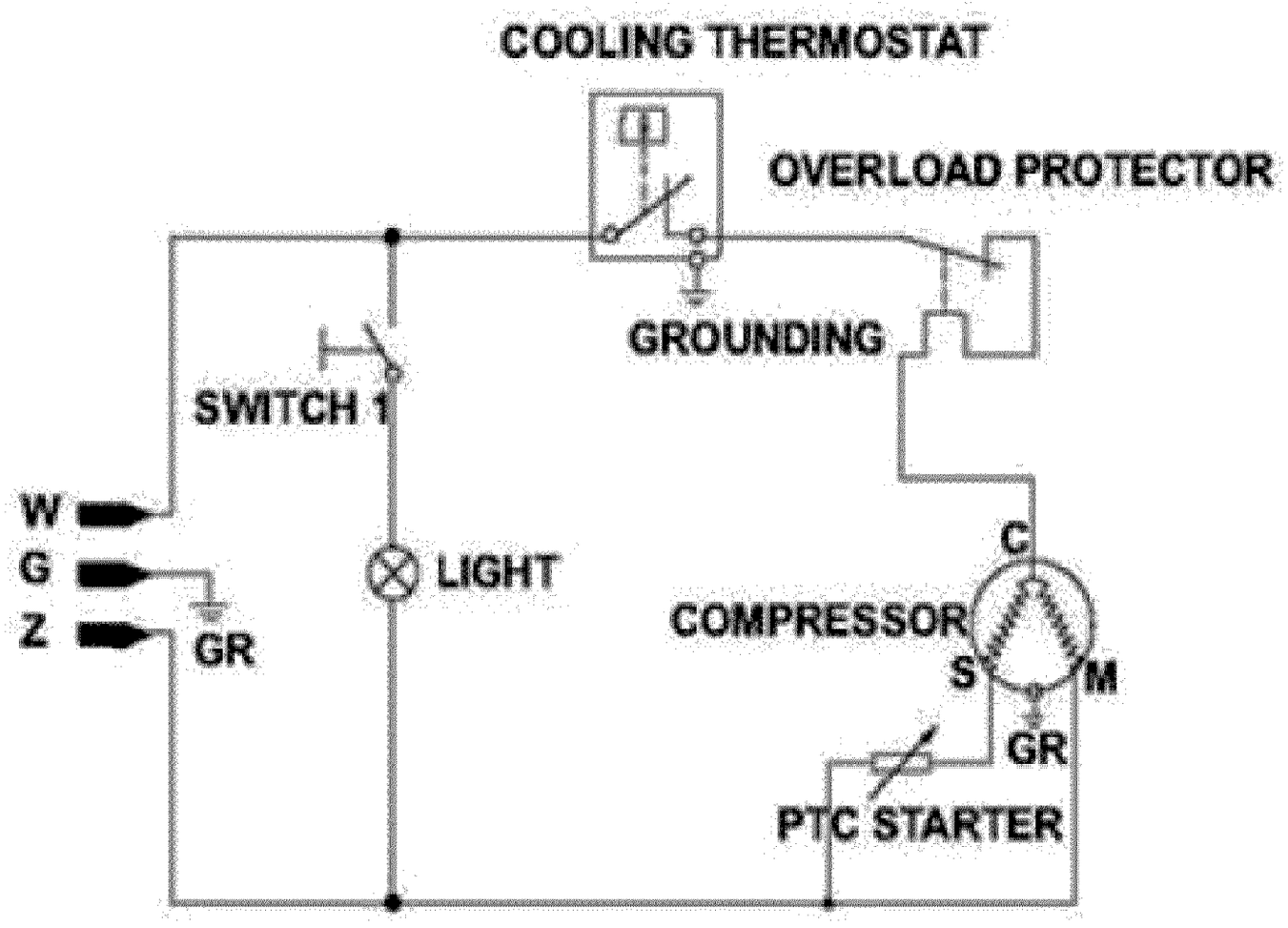

LIMITED WARRANTY

Vinotemp International ("Seller") and the person or entity that acquires these goods from Seller ("Purchaser") hereby fully agree to the following terms and conditions of the sale: All prices are FOB — Place of Shipment — Seller' s premises, unless otherwise noted. Seller assumes no responsibility for the goods sold to the Purchaser once the goods have left the Seller' s premises, including, but not limited to, late delivery by the moving carrier, or for events caused by any difficulty carrier incurs in attempting to fit the goods into the Purchaser' s place of business or residence due to the size of the goods or otherwise, such as the disassembly and reassembly of the goods. Purchaser assumes all responsibility for delivery, payment of freight, access, measurement, installation, hook-up, moving and storage of the goods. The transportation of all goods is subject to the terms and conditions which the moving carrier imposes on Purchaser including, but not limited to, additional charges imposed per flight of stairs, and/or additional charges resulting from the carrier' s inability to safely and/or adequately use the building elevator to lift the goods to an upper floor.

VTC34FD2B-S0

Any claim for damages incurred during shipment by the carrier of the goods are insured and handled directly with the carrier. Any damages due to manufacture defects will be handled directly with Vinotemp International.

All sales are final, and unless authorized in writing by the Seller, Purchaser is not entitled to return conforming goods, under any circumstance. If Purchaser refuses to accept conforming goods, under any circumstance, the Purchaser is liable for the return and cost of freight both ways a restocking charge that is 35% of the purchase price of the goods. Purchaser must notify Seller of non-conforming goods within five days of delivery, after which time all goods are deemed accepted.

If Purchaser tenders payment with a check that has insufficient funds (NSF), or stops payment on a check or credit card for any reason, Purchaser agrees to pay for all costs associated with the Seller' s connection or litigation of such a claim, including without limitation extra damages, court costs and attorneys' fees. Title to the goods does not pass until payment is received in full by Seller and Seller retains a security interest in the goods until they are paid for in full.

LIMITED WARRANTY: Seller warrants that the goods will be free of defects in materials and workmanship as follows: Furniture style (wood wine units: all cooling unit parts for a period of 5 (five) years; cabinetry and labor (uninstalled) for a period of 12 (twelve) months from date of sale, removal and re-installation of unit is not included in warranted labor. For the Metal cabinet wine units: parts and labor for cooling system and cabinetry for a period of 12 (twelve) months from date of sale, removal and re-installation of unit is not included in warranted labor. For a B good, scratch and dent or refurbished unit, warranty is 1 year from your dated invoice (parts only, freight not included). 6V and 6H: 90 (ninety) days from the date of sale. Cigar Humidors and

VT-HD28-SS

reconditioned part[s]. Unless otherwise provided by applicable law, Purchaser is responsible for shipping the unit pre-paid to designated facility and Seller will pay return shipping charges in the continental United States for items repaired under warranty with in 12 (twelve) months from date of sale. Since the natural variation in texture, density, grain, color, tone and shade of wood is unavoidable; Seller does not guarantee the texture, color, tone or shade of the wood: nor does seller guarantee the colorfastness of wood or against peeling, chipping, cracking or scratching. Note: Unfinished wood is subject to warping; all wood surfaces must be sealed before placing cellar into service. Improper placement of the unit will void the warranty. This limited warranty applies only inside the continental US. (Alaska, Puerto Rico and Hawaii) are not warranted under the Limited Warranty.

Purchaser understands and acknowledges that the goods sold here are wine cellars, cigar humidors, and/or other similar units which house wine or cigars. Purchaser assumes all risk of using these units, including risk of spoilage, humidity variations, temperature variations, leaks, fire, water damage, mold, mildew, dryness and similar perils that might occur.

Unless otherwise provided by applicable law, seller is not responsible for incidental or consequential damages, and there no warranties, expressed or implied, which extend beyond the description on the face hereof; the implied warranties of merchantability and of fitness for a particular purpose are hereby expressly disclaimed. Some states do not allow the exclusion of incidental or consequential damages, or a waiver of the implied warranties of fitness and/or merchantability, so the above limitations may not apply to you. This warranty gives you specific legal rights and you may also have other rights which vary from state to state.

In the event of any dispute between Seller and Purchaser arising out of or relating to these terms and conditions or to the goods sold generally, Purchaser must first file a written claim with Seller within thirty days of the occurrence giving rise to the claim and wait an additional thirty days for a response before initiating any legal action. Any legal proceeding arising out of or relating to these terms and conditions or to the goods sold generally shall be brought solely in the County of Los Angeles. The prevailing party in any such proceeding is entitled to its attorneys□fees and costs. In no event may Purchaser initiate any legal proceeding more than six months after the occurrence of the event giving rise to the dispute.

The above terms and conditions are the only ones governing this transaction and Seller makes no oral representations of any kind. These Terms and Conditions can only be modified in writing, signed by both Purchaser and Seller.

For service on your unit due to malfunction please call 800 777 8466.
If the service technician makes an in home visit and finds the unit working correctly, you will be subject to a service fee for the visit.
Please review Terms and Conditions on www.vinotemp.com.
For more Information and Service please email us at
info@vinotemp.com

Vitotemp®

VT3HF020-S0