# Refrigerator

## User manual

Free Standing Appliance

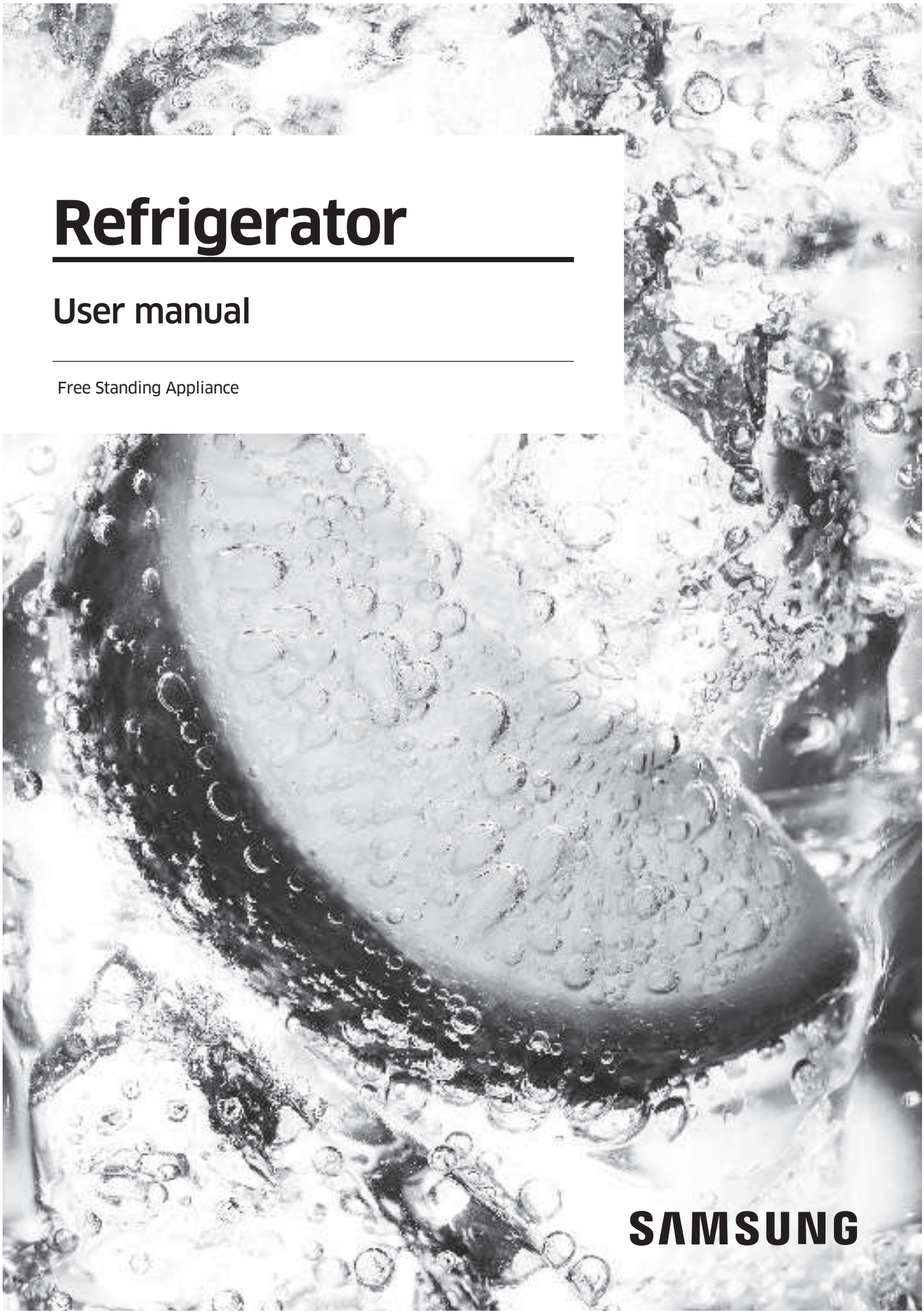

# Contents




## Safety information 4

What you need to know about the safety instructions 4
Important safety symbols and precautions: 5
State of California Proposition 65 Warning 5
Important safety precautions 5
Severe warning signs for transportation and site 7
Critical installation warnings 8
Installation cautions 10
Critical usage warnings 10
Usage cautions 13
Cleaning cautions 14
Critical disposal warnings 15

## Installation 16

Refrigerator at a glance 16
Step-by-step installation 19

## Operations 40

Main panel 40
SmartThings 50
SMART GRID Function (Demand Response) 53
Dispenser panel 58
Special features 59

## Maintenance 65

Handling and care 65
Cleaning 75
Replacement 76




Untitled-1 2 2019-01-03 11:43:01

## Troubleshooting 78

General 78
Do you hear abnormal sounds from the refrigerator? 82
SmartThings 84

## LIMITED WARRANTY (U.S.A.) 85

SAMSUNG REFRIGERATOR 85

## Warranty Information (CANADA) 88

If your refrigerator needs service 88
Limited Warranty for Original Purchaser 88
Obligation to the Original Owner 88
Exclusions of the Warranty 89

## Regulatory Notice 90

FCC Notice 90
IC Notice 91

## Open Source Announcement 92




Untitled-1 3 2019-01-03 11:43:01

# Safety information

Before using your new Samsung Refrigerator, please read this manual thoroughly to ensure that you know how to operate the features and functions that your new appliance offers safely and efficiently.



## What you need to know about the safety instructions

- This appliance is not intended for use by persons (including children) with reduced physical, sensory or mental capabilities, or lack of experience and knowledge, unless they have been given supervision or instruction concerning use of the appliance by a person responsible for their safety. Children should be supervised to ensure that they do not play with the appliance.
- Because the following instructions cover various models, the characteristics of your refrigerator may differ slightly from the refrigerator described in this manual.
- If you have any question, contact us at 1-800-SAMSUNG or find help and information online at www.samsung.com.
- Refrigerant squirting out of the pipes could ignite or cause an eye injury. When refrigerant leaks from the pipe, avoid any naked flames and move anything flammable away from the product and ventilate the room immediately.
  - Failing to do so may result in fire or explosion.
- Improper use of the grounding plug can result in a risk of electric shock. If it is necessary to use an extension cord, use only a 3-wire extension cord that has a 3-blade grounding plug and a 3-slot receptacle that will accept the plug on the appliance. The marked rating of the extension cord should be AC 115-120 V, 10 A, or more. If a grounding adapter is used, make sure the receptacle box is fully grounded.



Untitled-1 4 2019-01-03 11:43:01

## Important safety symbols and precautions:

Please follow all safety instructions in this manual. This manual uses the following safety symbols.

### ⚠ WARNING

Hazards or unsafe practices that may result in **severe personal injury, property damage, and/or death**.

### ⚠ CAUTION

Hazards or unsafe practices that may result in **severe personal injury and/or property damage**.

**NOTE**

Useful information that helps users understand or benefit from the refrigerator.

**These warning signs are here to prevent injury to you and others.**

**Please follow them carefully.**

**After reading this section, keep it in a safe place for future reference.**

## State of California Proposition 65 Warning

### ⚠ WARNING

Cancer and Reproductive Harm - www.P65Warnings.ca.gov.

## Important safety precautions



Warning; Risk of fire / flammable materials

### ⚠ WARNING

- R-600a is used as a refrigerant. This product contains flammable gas (Refrigerant R-600a), contact your local authority in regard to safe disposal of this product.
- In order to avoid the creation of a flammable gas-air mixture if a leak in the refrigerating circuit occurs, the size of the room in which the appliance may be sited depends on the amount of refrigerant used. The room must be 35.3 $ft^3$ in size for every 8 g of R-600a refrigerant inside the appliance.



Untitled-1 5 2019-01-03 11:43:02

# Safety information



- The installation location should not be exposed to direct sunlight and not placed near any electric appliance or heat source, e.g. stove, oven or hob, radiator, etc.
- If you use two products side by side, for safety reason, be sure to use certified products in explosive gas atmospheres.
- Never start up an appliance showing any signs of damage. If in doubt, consult your dealer.
- If the supply cord is damaged, it must be replaced by the manufacturer, its service agent or similarly qualified persons in order to avoid a hazard.
- The socket must be easily accessible so that the appliance can be quickly disconnected from the supply in an emergency. It must be outside the area of the rear of the appliance.
- Do not store explosive substances such as aerosol cans with a flammable propellant in this appliance.
- New hose-sets supplied with the appliance are to be used and that old hose-sets should not be reused.
- When positioning the appliance, ensure the supply cord is not trapped or damaged.
- Do not locate multiple portable socket-outlets or portable power supplies at the rear of the appliance.

## ⚠ WARNING

- System contains refrigerant under high pressure. Do not tamper with the system. It must be serviced by qualified persons only.
- Fill with potable water only.
- Keep ventilation openings, in the appliance enclosure or in the built-in structure, clear of obstruction.
- Do not use mechanical devices or other means to accelerate the defrosting process, other than those recommended by the manufacturer.
- Do not damage the refrigerant circuit.
- Do not use electrical appliances inside the food storage compartments of The appliance, unless they are of the type recommended by the manufacturer.
- Connect to potable water supply only.
- To avoid a hazard due to instability of the appliance, it must be fixed in accordance with the instructions.
- The refrigeration system is under high pressure. Do not tamper with it. Contact qualified service personal before disposal.



Untitled-1 6 2019-01-03 11:43:02

## ⚠ CAUTION

- Risk Of Fire Or Explosion. Flammable Refrigerant Used. Do Not Use Mechanical Devices To Defrost Refrigerator. Do Not Puncture Refrigerant Tubing.
- Risk Of Fire Or Explosion. Flammable Refrigerant Used. To Be Repaired Only By Trained Service Personnel. Do Not Puncture Refrigerant Tubing.
- Risk Of Fire Or Explosion. Flammable Refrigerant Used. Consult Repair Manual/Owner's Guide Before Attempting to Service This Product. All Safety Precautions Must Be Followed.
- Risk Of Fire Or Explosion. Dispose Of Properly In Accordance With Federal Or Local Regulations. Flammable Refrigerant Used.
- Risk Of Fire Or Explosion Due To Puncture Of Refrigerant Tubing; Follow Handling Instructions Carefully. Flammable Refrigerant Used.
- To Prevent A Child From Being Entrapped, Keep Out Of Reach Of Children And Not In The Vicinity Of Freezer Or Refrigerator.
- DANGER: Risk of child entrapment. Before you throw away your old refrigerator or freezer:
  - Take off the doors.
  - Leave the shelves in place so that children may not easily climb inside.

**This appliance is intended to be used in household and similar applications such as**

- staff kitchen areas in shops, offices and other working environments;
- farm houses and by clients in hotels, motels and other residential type environments;
- bed and breakfast type environments;
- catering and similar non-retail applications.

## Severe warning signs for transportation and site

## ⚠ WARNING

- When transporting and installing the appliance, care should be taken to ensure that no parts of the refrigerating circuit are damaged.
  - Refrigerant leaking from the pipe work could ignite or cause an eye injury. If a leak is detected, avoid any naked flames or potential sources of ignition and air the room in which the appliance is standing for several minutes.
  - This appliance contains a small amount of isobutane refrigerant (R-600a), a natural gas with high environmental compatibility that is, however, also flammable.





Untitled-1 7
2019-01-03 11:43:02

# Safety information



## Critical installation warnings

### ⚠ WARNING

- Do not install the refrigerator in a damp location or place where it may come in contact with water.
  - Deteriorated insulation on electrical parts may cause an electric shock or fire.
- Do not place this refrigerator in direct sunlight or expose it to the heat from stoves, room heaters, or other appliances.
- Do not plug several appliances into the same multiple power strip. The refrigerator should always be plugged into its own individual electrical outlet which has a voltage rating that matches the voltage listed on the refrigerator's rating plate.
  - This provides the best performance and also prevents overloading of house wiring circuits, which could overheat the wires and cause a fire hazard.
- If the wall socket is loose, do not insert the power plug.
  - There is a risk of electric shock of fire.
- Do not use a power cord that has cracks or abrasion damage along its length or at either end.
- Do not bend the power cord excessively or place heavy objects on it.
- Do not pull or excessively bend the power cord.
- Do not twist or tie the power cord.
- Do not hook the power cord over a metal object, place a heavy object on the power cord, insert the power cord between objects, or push the power cord into the space behind the appliance.
- When moving the refrigerator, be careful not to roll over or damage the power cord.
  - This may result in an electric shock or fire.
- Never unplug your refrigerator by pulling on the power cord. Always grip the plug firmly and pull straight out from the outlet.
  - Damage to the cord may cause a short-circuit, fire, and/or electric shock.
- Do not install this appliance near a heater or flammable material.
- Do not install this appliance in a location where gas may leak.
  - This may result in an electric shock or fire.
- This refrigerator must be properly located and installed in accordance with the instructions in this manual before you use it.
- Connect the power plug in the proper position with the cord hanging down.
  - If you connect the power plug upside down, the wire can get cut off and cause a fire or electric shock.
- Make sure that the power plug is not crushed or damaged by the back of the refrigerator.



Untitled-1 8 2019-01-03 11:43:02

- Keep the packing materials out of reach of children.
  - There is a risk of death from suffocation if a child puts the packing materials on his or her head.
- The appliance must be positioned so that the plug is accessible after installation.
  - Failing to do so may result in an electric shock or fire due to electric leakage.
- Do not install this appliance in a humid, oily or dusty location, or in a location exposed to direct sunlight or to water (rain drops).
  - Deteriorated insulation on electrical parts may cause an electric shock or fire.
- If large amounts of dust or water enter the refrigerator, disconnect the power plug and contact a Samsung Electronics service center.
  - Otherwise there is a risk of fire.
- Do not stand on top of the appliance or place objects (such as laundry, lighted candles, lighted cigarettes, dishes, chemicals, metal objects, etc.) on the appliance.
  - This may result in an electric shock, fire, problems with the product, or injury.
- You need to remove all the protective plastic film before you initially plug the product in.
- Children should be supervised to ensure that they do not play with the snap rings used for door adjustment or the water tube clips.
  - There is risk of death by suffocation if a child swallows a snap ring or water tube clip. Keep the snap rings and water tube clips out of children's reach.
- The refrigerator must be safely grounded.
  - Always make sure that you have grounded the refrigerator before attempting to investigate or repair any part of the appliance. Power leakages can cause severe electric shock.
- Never use gas pipes, telephone lines, or other potential lightning attractors as an electrical ground.
  - You must ground the refrigerator to prevent any power leakages or electric shocks caused by current leakage from the refrigerator.
  - Current leakage may result in an electric shock, fire, explosion, or problems with the product.
- Plug the power plug into the wall socket firmly. Do not use a damaged power plug, damaged power cord, or loose wall socket.
  - This may result in an electric shock or fire.
- Only a qualified technician or service company should be allowed to change the fuse in the refrigerator.
  - Failing to do so may result in an electric shock or personal injury.





Untitled-1 9
2019-01-03 11:43:02

# Safety information



## Installation cautions

### ⚠ CAUTION

- Allow sufficient space around the refrigerator and install it on a flat surface.
  - Keep the ventilation space in the appliance enclosure or mounting structure clear of obstructions.
- After you have installed the refrigerator and turned it on, allow the appliance to stand for 2 hours before loading it with food.
- It is strongly recommended you have a qualified technician or service company install the refrigerator.
  - Failing to do so may result in an electric shock, fire, explosion, problems with the product, or injury.
- Overloading one door may make the refrigerator fall, causing physical injury.

## Critical usage warnings

### ⚠ WARNING

- Do not insert the power plug into a wall socket with wet hands.
  - This may result in an electric shock.
- Do not store articles on the top of the appliance.
  - When you open or close the door, the articles may fall and cause personal injury and/or material damage.
- Do not insert hands, feet, or metal objects (such as chopsticks, etc.) into the bottom or the back of the refrigerator.
  - This may result in an electric shock or injury.
  - Any sharp edges may cause a personal injury.
- Do not touch the inside walls of the freezer or products stored in the freezer with wet hands.
  - This may cause frostbite.
- Do not put a container filled with water on the refrigerator.
  - If spilled, there is a risk of fire or electric shock.
- Do not keep volatile or flammable objects or substances (benzene, thinner, propane gas, alcohol, ether, LP gas, and other such products) in the refrigerator.
  - This refrigerator is for storing food only.
  - This may result in fire or explosion.
- Children should be supervised to ensure that they do not play with the appliance.
  - Keep fingers out of “pinch point” areas. Clearances between the doors and cabinet are necessarily small. Be careful when you open the doors if children are in the area.



Untitled-1 10 2019-01-03 11:43:02

- Do not let children hang on the door or door bins. A serious injury may occur.
- Do not let children go inside the refrigerator. They could become trapped.
- Do not insert your hands into the area under the appliance.
  - Any sharp edges may cause personal injury.
- Do not store pharmaceutical products, scientific materials, or temperature sensitive products in the refrigerator.
  - Products that require strict temperature controls must not be stored in the refrigerator.
- Do not place or use electrical appliances inside the refrigerator/freezer, unless they are of a type recommended by the manufacturer.
- If you smell smoke, pull out the power plug immediately, and then contact a Samsung Electronics service center.
- If large amounts of dust or water enter the refrigerator, disconnect the power plug and contact your Samsung Electronics service center.
  - Otherwise there is a risk of fire.
- Do not let children step on a drawer.
  - The drawer may break and cause them to slip.
- Do not leave the doors of the refrigerator open while the refrigerator is unattended and do not let children enter the refrigerator.
- Do not allow babies or children go into a drawer.
  - It can cause death from suffocation by entrapment or personal injury.
- Do not overfill the refrigerator with food.
  - When you open the door, an item may fall out and cause personal injury or material damage.
- Do not spray volatile material such as insecticide onto the surface of the appliance.
  - As well as being harmful to humans, it may also result in an electric shock, fire, or problems with the product.
- Never put fingers or any objects into the water dispenser outlet, ice chute, or ice maker bucket.
  - It may cause a personal injury or material damage.
- Do not use or place any substances sensitive to temperature such as flammable sprays, flammable objects, dry ice, medicine, or chemicals near or inside the refrigerator.
- Do not use a hair dryer to dry the inside of the refrigerator. Do not place a lighted candle in the refrigerator to remove bad odors.
  - This may result in an electric shock or fire.
- Fill the water tank and ice cube trays with potable water only (tap water, mineral water, or purified water).
  - Do not fill the tank with tea, juice, or a sports drink. They can damage the refrigerator.





Untitled-1 11
2019-01-03 11:43:02

# Safety information



- Do not stand on top of the appliance or place objects (such as laundry, lighted candles, lighted cigarettes, dishes, chemicals, metal objects, etc.) on the appliance. This may result in an electric shock, fire, problems with the product, or injury. Do not put a container filled with water on the appliance.
  - If spilled, there is a risk of fire or electric shock.
- Never stare directly at the UV LED lamp for long periods of time.
  - This may result in eye strain due to the ultraviolet rays.
- Do not put a fridge shelf into the refrigerator upside down. The shelf stopper will not work.
  - The glass shelf could fall and cause personal injury.
- Keep fingers out of “pinch point” areas. Clearances between the doors and cabinet are necessarily small. Be careful when you open the doors if children are in the area.
- If a gas leak is detected, avoid any naked flames or potential sources of ignition, and air the room in which the appliance is standing for several minutes.
  - Do not touch the appliance or power cord.
  - Do not use a ventilating fan.
  - A spark may result in an explosion or fire.
- Use only the LED Lamps provided by the manufacturer or its service agents.
- Bottles should be stored tightly together so that they do not fall over or out.
- This product is intended only for the storage of food in a domestic environment.
- Never put fingers or any objects into the water dispenser outlet, ice chute, or ice maker bucket.
  - This can cause a personal injury or material damage.
- Do not attempt to repair, disassemble, or modify the refrigerator yourself.
  - Unauthorized modifications can cause safety problems. To reverse an unauthorized modification, we will charge the full cost of parts and labor.
- Do not use any fuse (such as cooper, steel wire, etc.) other than a standard fuse.
- If your refrigerator needs to be repaired or reinstalled, contact your nearest Samsung service center.
  - Failing to do so may result in an electric shock, fire, problems with the product, or injury.
- If the interior or exterior LED lamp has gone out, contact your nearest Samsung service center.
- If the refrigerator emits a burning smell or smoke, unplug the refrigerator immediately and contact a Samsung service center.
  - Failing to do so may result in an electric or fire hazards.
- Pull the power plug out of the socket before changing the interior lamps of the refrigerator.
  - Otherwise, there is a risk of electric shock.



Untitled-1 12 2019-01-03 11:43:02

- If you experience difficulty changing a non-LED light, contact a Samsung service center.
- If the product is equipped with LED lamps, do not disassemble the Lamp Covers and LED lamps yourself.
  - Contact a Samsung service center.
- Plug the power plug into the wall socket firmly.
- Do not use a damaged power plug, damaged power cord, or loose wall socket.
  - This may result in an electric shock or fire.

## Usage cautions

### ⚠ CAUTION

- Do not re-freeze frozen foods that have thawed completely.
- Use only the ice maker provided with the refrigerator.
- To get the best performance from the product:
  - Do not place food too close to the vents at the rear of the refrigerator as this can obstruct free air circulation in the refrigerator compartment.
  - Wrap food up properly or place it in airtight containers before putting it into the refrigerator.
  - Please observe maximum storage times and expiration dates of frozen goods.
- Do not put glass containers or bottles or carbonated beverages into the freezer.
  - The container may freeze and break, and this may result in injury.
- Service Warranty and Modification.
  - Any changes or modifications performed by a 3rd party on this finished appliance are not covered under Samsung warranty service, nor is Samsung responsible for safety issues that result from 3rd party modifications.
- Do not block the air vents inside the refrigerator.
  - If the air vents are blocked, especially with a plastic bag, the refrigerator can be over cooled. If a cooling period lasts too long, the water filter may break and cause water leakage.
- If the refrigerator is disconnected from the power supply, you should wait for at least five minutes before plugging it back in.
- If large amounts of water enter the refrigerator, pull out the power plug and contact a Samsung service center.
- Do not strike or apply excessive force to any glass surface.
  - Broken glass may result in a personal injury and/or property damage.





Untitled-1 13 2019-01-03 11:43:02

# Safety information

- Fill the water tank and ice cube trays with potable water only (tap water, mineral water, or purified water).
  - Do not fill the tank with tea, juice, or a sports drink. They can damage the refrigerator.
- If the refrigerator is flooded, shut off the power to the refrigerator and contact your nearest Samsung service center.
  - There is a risk of electric shock or fire.
- Do not keep vegetable oil in your refrigerator's door bins. The oil can solidify, making it foul-tasting and difficult to use. In addition, the open container can leak and the leaked oil can cause the door bin to crack. After opening an oil container, it is best to keep the container in a cool and shaded place such as a cupboard or pantry.
  - Examples of vegetable oil: olive oil, corn oil, grape-seed oil, etc.

## Cleaning cautions

### ⚠ CAUTION

- Do not spray water directly on the inside or outside of the refrigerator.
  - There is a risk of fire or electric shock.
- Do not use a hair dryer to dry the inside of the refrigerator.
- Do not place a lighted candle in the refrigerator to remove bad odors.
  - This may result in an electric shock or fire.
- Do not spray cleaning products directly on the display.
  - Printed letters on the display may come off.
- If any foreign substance such as water has entered the appliance, unplug the power plug and contact your nearest Samsung service center.
  - Failing to do so may result in an electric shock or fire.
- Use a clean, dry cloth to remove any foreign matter or dust from the power plug blades. Do not use a wet or damp cloth when cleaning the plug.
  - Otherwise, there is a risk of fire or electric shock.
- Do not clean the appliance by spraying water directly onto it.
- Do not use benzene, thinner, or Clorox (bleach) to clean the refrigerator.
  - They may damage the surface of the appliance and may cause a fire.
- Never put fingers or any objects into the dispenser outlet.
  - This can cause a personal injury or material damage.
- Before cleaning or performing maintenance, unplug the appliance from the wall socket.
  - Failing to do so may result in an electric shock or fire.
- Use a clean sponge or soft cloth and a mild detergent in warm water to clean the refrigerator.



Untitled-1 14 2019-01-03 11:43:02

- Do not use abrasive or harsh cleansers such as window sprays, scouring cleansers, flammable fluids, muriatic acid, cleaning waxes, concentrated detergents, bleaches, or cleansers containing petroleum products on exterior surfaces (doors and cabinet), plastic parts, door and interior liners, and gaskets.
  - These can scratch or damage the material.
- Do not clean glass shelves or covers with warm water when they are cold. Glass shelves and covers may break if exposed to sudden temperature changes or impacts such as bumping or dropping.

## Critical disposal warnings

### ⚠ WARNING

- Children trapped inside a refrigerator can hurt themselves or suffocate to death.
- Please dispose of the packaging material from this product in an environmentally friendly manner.
- Ensure that none of the pipes on the back of the refrigerator are damaged prior to disposal.
- R-600a is used as a refrigerant. This product contains flammable gas (Refrigerant R-600a), contact your local authority in regard to safe disposal of this product.
- When disposing of this refrigerator, remove the door/door seals and door latch so that small children or animals cannot become trapped inside. Children should be supervised to ensure that they do not play with the appliance.
  - If trapped inside, the child could be injured or suffocate to death.
- Cyclopentane is used in the insulation. The gases in the insulation material require a special disposal procedure. Please contact your local authorities in regard to the environmentally safe disposal of this product.
- Keep all packaging materials well out of the reach of children, as packaging materials can be dangerous to children.
  - If a child places a bag over his or her head, the child could suffocate.





Untitled-1 15 2019-01-03 11:43:02

# Installation

Follow these instructions carefully to ensure a proper installation of this refrigerator and to prevent accidents before using it.

## ⚠ WARNING

- Use the refrigerator only for its intended purpose as described in this manual.
- Any servicing must be performed by a qualified technician.
- Dispose of the product packaging material in compliance with the local regulations.
- To prevent electric shock, unplug the power plug before servicing or replacing parts.



## Refrigerator at a glance

The actual refrigerator and provided component parts of your refrigerator may differ from the illustrations in this manual, depending on the model and the country.

### Type A

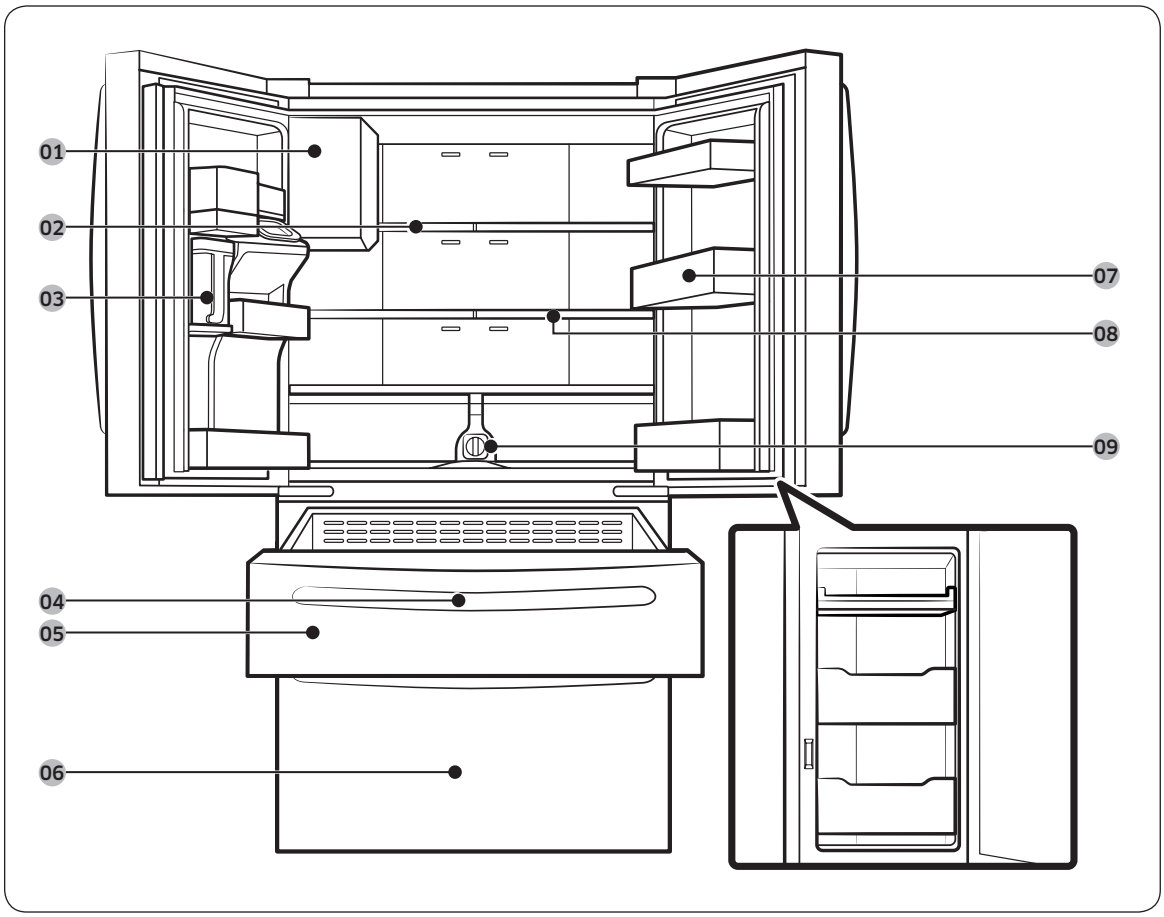




Untitled-1 16
2019-01-03 11:43:03

## Type B

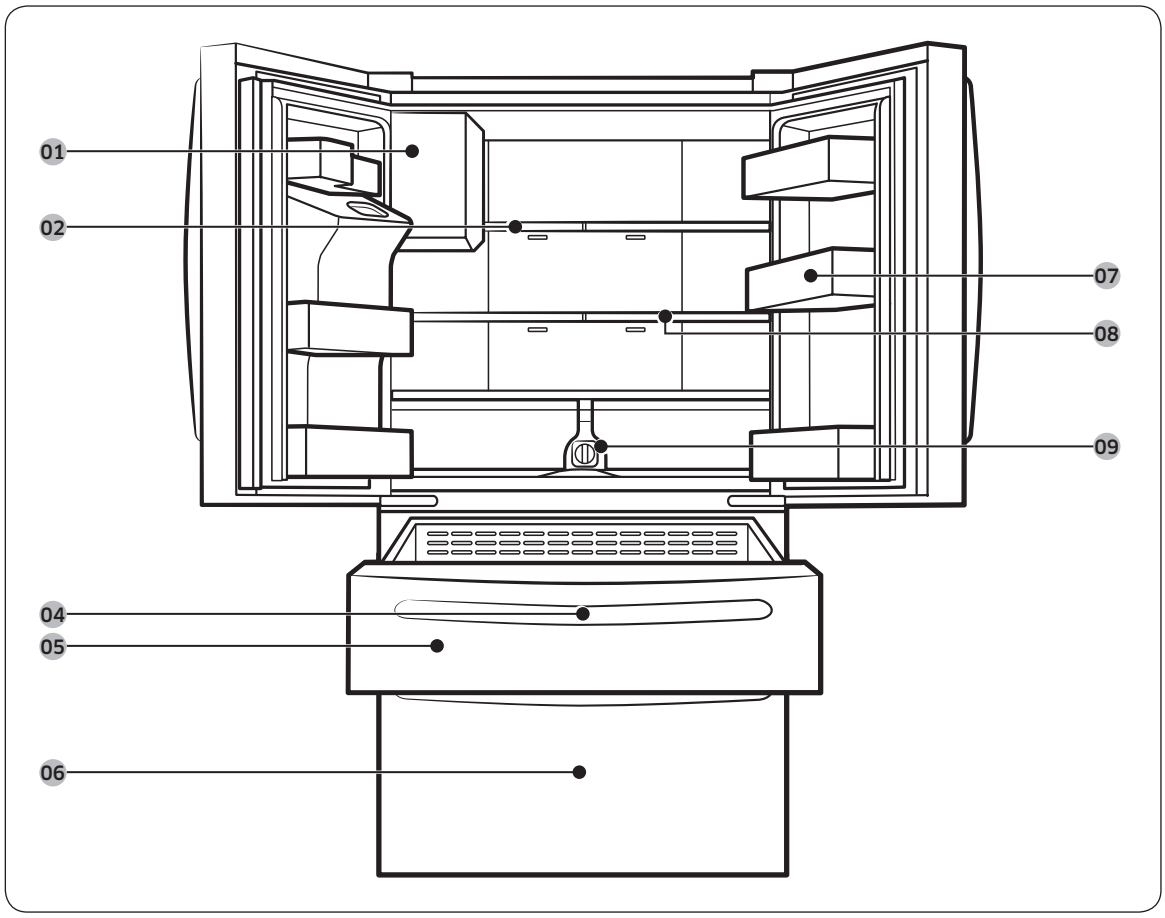


**01** Auto Ice Maker

**02** 1-Step Foldable Shelf

**03** Water tank (Auto Water Fill)

**04** Main panel (on the FlexZone™ handle)

**05** FlexZone™

**06** Freezer

**07** Door bins

**08** 2-Step Foldable Shelf

**09** Water filter

* applicable models only





Untitled-1 17
2019-01-03 11:43:03

# Installation

**NOTE**

- For energy efficiency, keep all shelves, drawers, and baskets in their original positions.
- When closing the door, make sure the vertical hinged section is in the correct position to avoid scratching the other door.
- If the vertical hinged section is reversed, put it back into the correct position, and then close the door.
- Moisture may form at times on the vertical hinged section.
- If you close a door forcefully, the other door may open.
- When a door is opened, the interlock switch automatically disables the auger motor of the ice maker for safety reasons.
- If the internal or external LED lamp is out of order, contact a local Samsung service center.
- If the door is left open for too long, the top internal LED will blink. This is normal.

## Door bins

Your refrigerator ships with door bins of different types and sizes. If the door bins for your refrigerator were packaged separately. Use the figure below to help you position the bins properly.

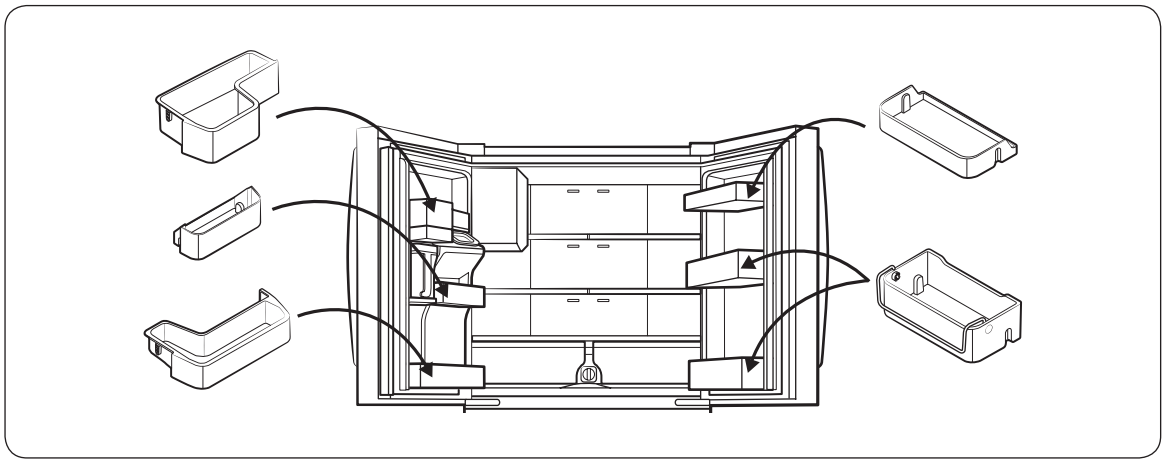





Untitled-1 18 2019-01-03 11:43:03

## Step-by-step installation

### STEP 1 Select a site

Select a site that:

- Has a solid, level surface without carpeting or flooring that may obstruct ventilation
- Is away from direct sunlight
- Has adequate room for opening and closing the door
- Is away from any heat sources
- Provides room for maintenance and servicing
- Has a temperature range between 50 °F (10 °C) and 109 °F (43 °C)

## ⚠ CAUTION

- If your refrigerator is equipped with an ice maker, provide extra space at the rear of the refrigerator for the water line connection.
- When you install the refrigerator next to a fixed wall, you must provide a minimum clearance of 3 3/4" (95 mm) from the wall to allow the door to swing open.

**NOTE**

To facilitate moving your refrigerator to its final location, be sure to measure the width and height of doorways, thresholds, ceilings, stairways, and anything else that needs to be taken into consideration to ensure you can move your refrigerator safely. The following diagram illustrates the exact height and depth (factory specifications) of your refrigerator.

Clearance

See the pictures and table below for space requirements for installation.

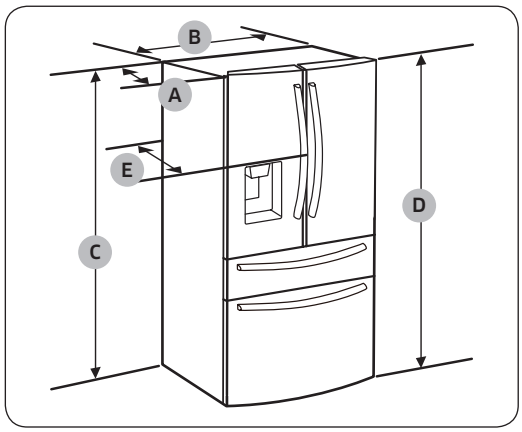


| Model | RF28* |
|---|---|
| Depth “A” | 34" (864 mm) |
| Width “B” | 35 6/8" (908 mm) |
| Height “C” | 68 7/8" (1749 mm) |
| Overall Height “D” | 70" (1777 mm) |
| Depth “E” | 36 1/2" (926 mm) |





Untitled-1 19
2019-01-03 11:43:03

# Installation

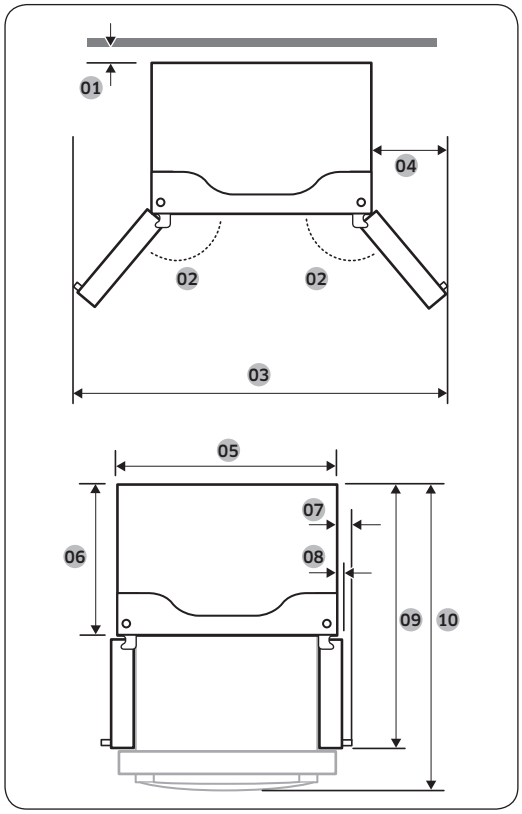


| Model | RF28* |
|---|---|
| 01 | 2" (50 mm) |
| 02 | 125° |
| 03 | 62 1/8" (1578 mm) |
| 04 | 13 2/8" (335 mm) |
| 05 | 35 6/8" (908 mm) |
| 06 | 29 3/8" (748 mm) |
| 07 | 4 6/8" (122 mm) |
| 08 | 2 3/8" (61 mm) |
| 09 | 48 1/4" (1226 mm) |
| 10 | 53" (1346 mm) |

**NOTE**

The measurements in the table above may differ slightly from the actual measurements, depending on the measuring and rounding method.





Untitled-1 20
2019-01-03 11:43:03

## STEP 2 Flooring

If the refrigerator cannot pass through the entrance due to its size, see **STEP 3 Door removal for entrance**.

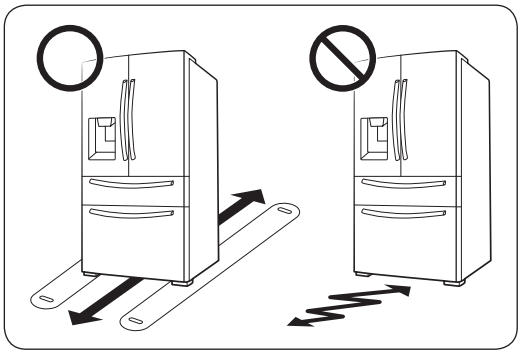

**NOTE**

To prevent floor damage, make sure the front levelling legs are in the upright position.

- The surface you install the refrigerator on must support a fully loaded refrigerator.
- To protect the floor, put a large piece of cardboard along the path to the refrigerator's final installation location.
- Once the refrigerator is in its final position, do not move it unless necessary to protect the floor. If you have to move the refrigerator, place thick paper or cloth such as old carpets along the path of movement.





Untitled-1 21 2019-01-03 11:43:04

# Installation

## STEP 3 Door removal for entrance

If the refrigerator cannot pass through the entrance to your home or kitchen due to its size, follow these instructions to remove and then re-install the refrigerator's doors. If you do not need to remove the doors, go to page 31 to continue the installation procedure.

### ⚠ WARNING

Unplug the power cord of the refrigerator before removing the doors.

Tools required (not provided)

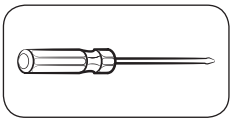

Phillips screwdriver

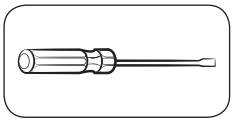

Flat-heat screwdriver

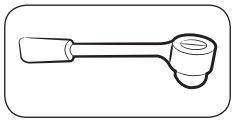

Socket wrench 3/8" (10 mm)

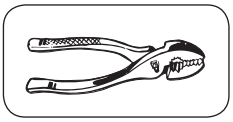

Pliers

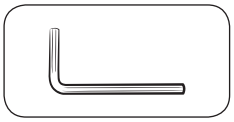

Allen wrench 1/4" (5 mm)





Untitled-1 22 2019-01-03 11:43:04

## Detach the fridge doors

Left door

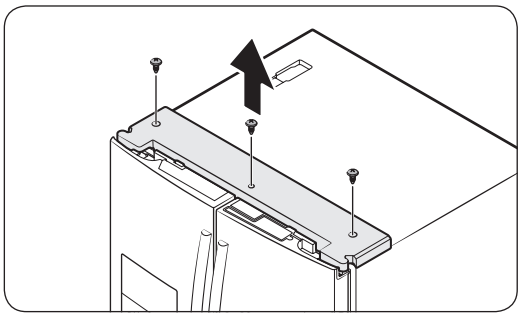

1. With the doors closed, use a Phillips head screwdriver to remove the screws (x3) in the top cover.

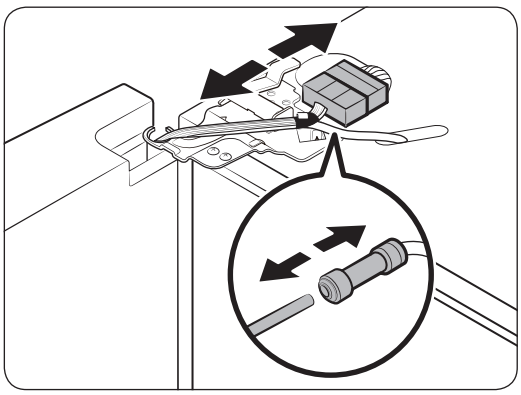

2. Disconnect the wires and the water tube from the left-side door. Do the following sequentially:
   - Decouple the **connector**.
   - While holding down one end of the water line coupler, disconnect the **water tube**.

### ⚠ CAUTION

Keep the water tube clips out of children's reach.

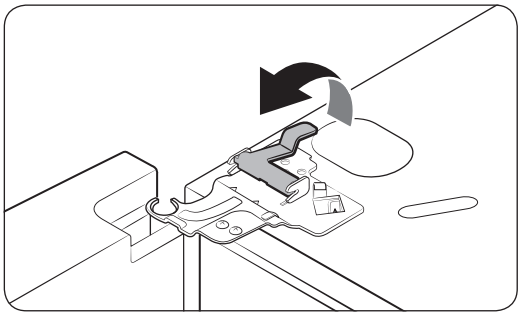

3. Gently draw up the clamp in several steps. To prevent finger injuries, do not apply a sudden force to the clamp.





Untitled-1 23
2019-01-03 11:43:05

# Installation

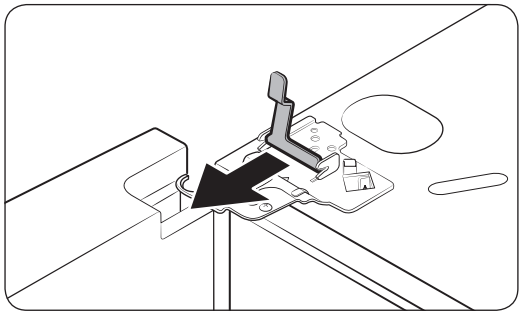

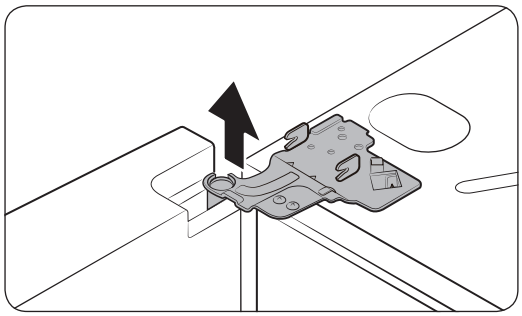

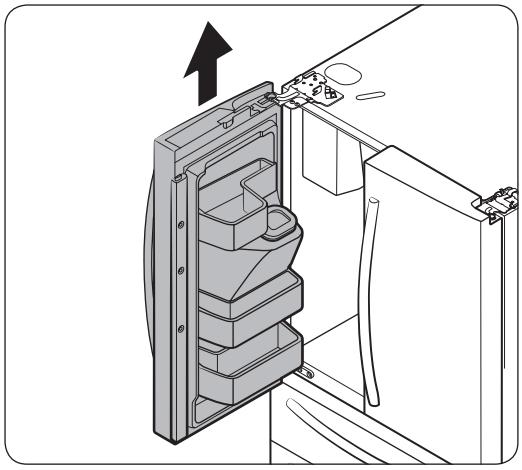

**4.** Pull up the clamp to remove it.

**NOTE**

Be careful not to drop the clamp on the floor.

**5.** Open the door 90 degrees. While holding the door, pull up and remove the top hinge. Be careful not to damage the connector wires when you remove the hinge.

**NOTE**

Be careful not to drop the hinge on the floor.

**6.** Gently pull up the door vertically to remove. Do not apply excessive force to the door. The door may fall, causing physical injury.

**7.** Lay the door down on a flat surface.

**⚠ CAUTION**

Please put the door down slowly to prevent scratches.



Untitled-1 24 2019-01-03 11:43:05

Right door

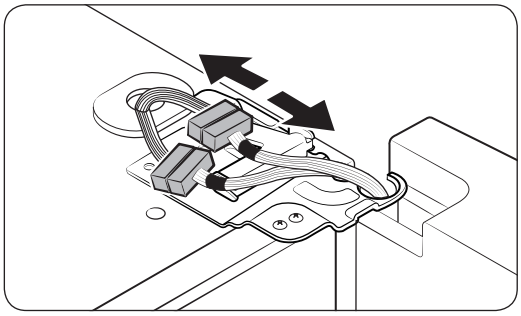

1. Disconnect the wire connectors (x2) on the right door. The position of the connectors differs with the model.

## ⚠ CAUTION

- Do not remove both doors simultaneously. Make sure to remove one door at a time. Otherwise, one of the doors may fall and cause physical injury.
- Make sure the refrigerator is off before disconnecting the connectors.

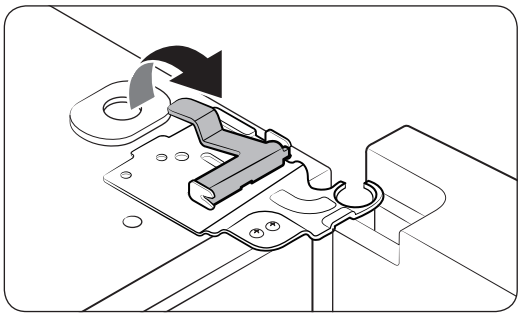

2. Gently draw up the clamp in several steps. To prevent finger injuries, do not apply a sudden force to the clamp.

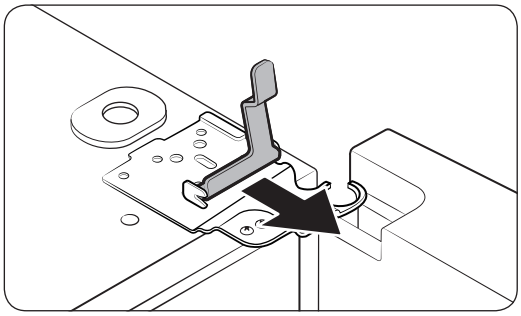

3. Pull up the clamp to remove it.

**NOTE**

Be careful not to drop the clamp on the floor.





Untitled-1 25 2019-01-03 11:43:06

# Installation

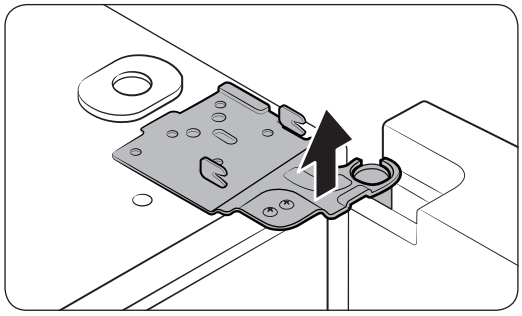

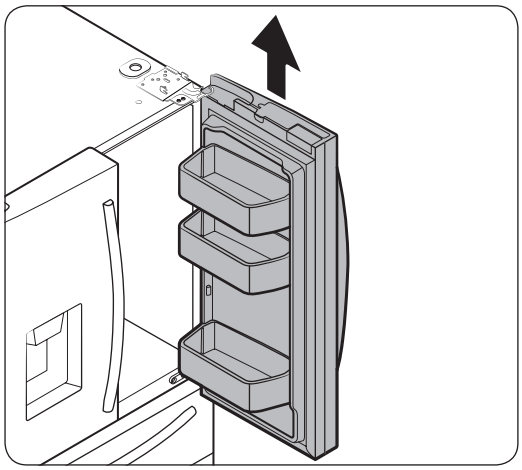

4. Open the door 90 degrees. While holding the door, pull up and remove the top hinge. Be careful not to damage the connector wires when you remove the hinge.

**NOTE**

Be careful not to drop the hinge on the floor.

5. Gently pull up the door vertically to remove. Do not apply excessive force to the door. The door may fall, causing physical injury.
6. Lay the door down on a flat surface.





Untitled-1 26 2019-01-03 11:43:06

### To reattach the fridge door

After you have moved the refrigerator to its final location, reattach the doors by following the removal instructions in reverse order.

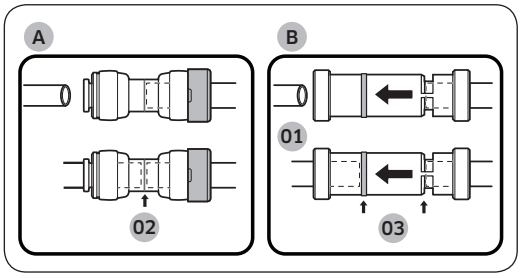


**01** Dispenser
**02** Center of transparent coupler
**03** Guidelines

## ⚠ CAUTION

To prevent water leaks from the dispenser, the water line must be fully connected. Make sure both tubes of the water line are inserted fully to the center of transparent coupler (A) or the guidelines (B).

### Detach the FlexZone™ drawer

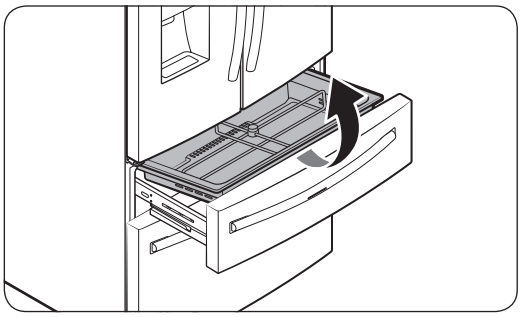

**1.** Lift up to remove the **FlexZone™ basket**.

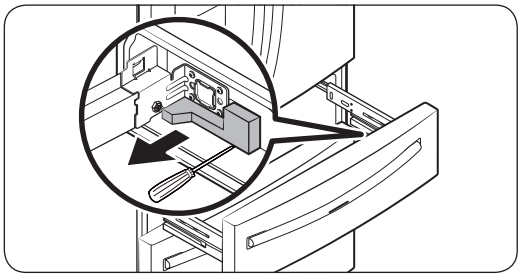

**2.** Remove the **wire cover** along with the connector harness using a flat-head screwdriver.





Untitled-1 27
2019-01-03 11:43:06

# Installation

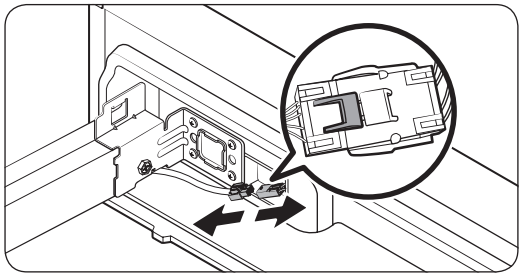

**3.** Press the **locking tab** to disconnect the wire connector.

## ⚠ CAUTION

When relocking the tab, make sure to fully connect the wire connector. Otherwise, the FlexZone™ will not operate.

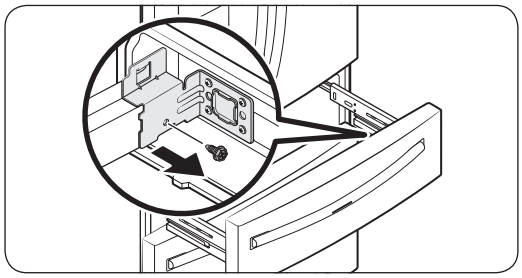

**4.** Remove the hex-head bolt on each side of the drawer using a 10 mm socket wrench.

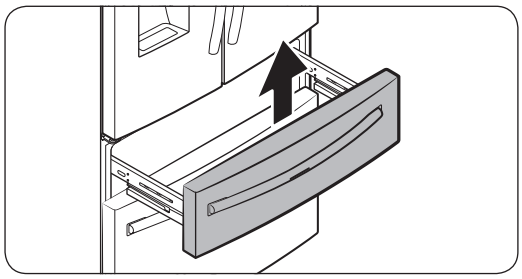

**5.** Lift up to remove the **drawer front of the FlexZone™** from the rail assembly.

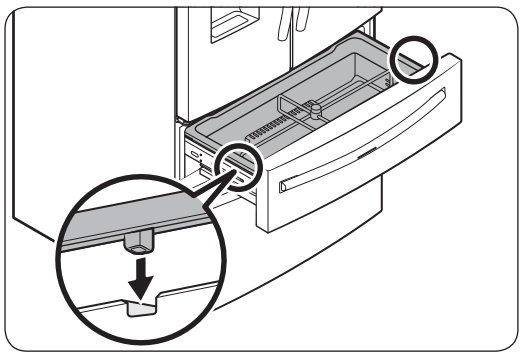

## ⚠ CAUTION

- Use caution when removing the rail assembly, which may fall off causing damage to the floor.
- Make sure to put the FlexZone™ drawer in place after removing or mounting the FlexZone™ basket. The FlexZone™ drawer may not open or close if the freezer drawer is not in place.
- Do not store too much food in the FlexZone™ drawer. This prevents the FlexZone™ drawer from closing properly, resulting in frost buildup.



Untitled-1 28 2019-01-03 11:43:07

### To reattach the FlexZone™ drawer

After you have moved the refrigerator to its final location, re-attach the FlexZone™ drawer by following the removal instructions in reverse order.

## ⚠ CAUTION

If the FlexZone™ or the indicator does not operate properly, make sure the connectors are connected properly.

### To detach the freezer drawer

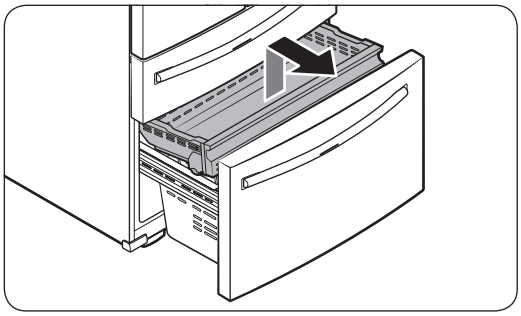

1. Push the **upper basket** to the end, and then pull up to remove.

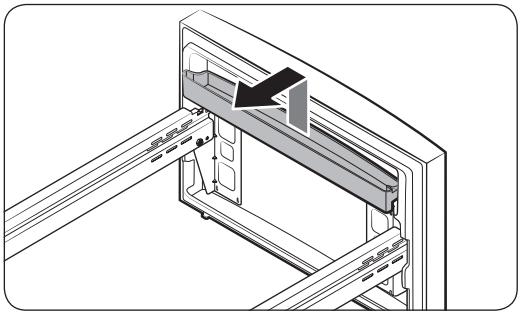

2. Lift up to remove the **door bin**.

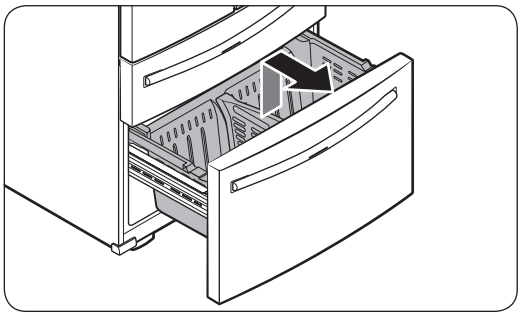

3. Then, pull up to remove the **lower basket** from the rail assembly.





Untitled-1 29 2019-01-03 11:43:08

# Installation

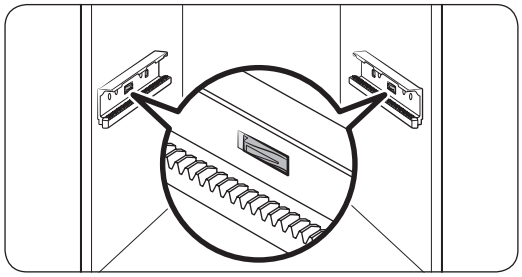

**4.** Press down the hooks to unlock the rail assembly.

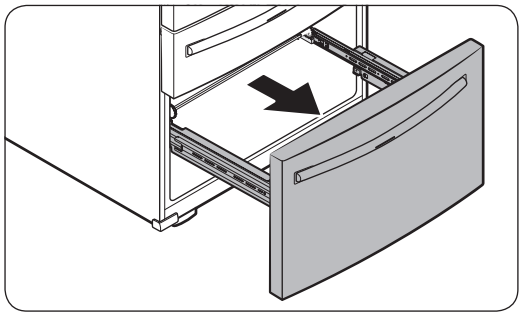

**5.** While holding the upper area of the freezer drawer front, slide the drawer out all the way to remove the freezer drawer from the rail assembly.

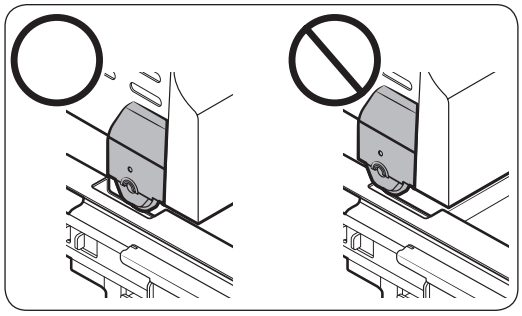

## ⚠ CAUTION

- Be careful not to scratch or dent the rail assembly.
- Make sure you mount the freezer baskets in the correct position. Otherwise, the door will not open or close properly, which causes frost to build up.
- Do not store too much food in the freezer drawer. This prevents the freezer drawer from closing properly, resulting in frost buildup.

### To reattach the freezer drawer

Once the refrigerator is in or near it's final location, re-attach the freezer drawer by following the directions in the reverse order of removal.



Untitled-1 30 2019-01-03 11:43:08

## STEP 4 Levelling the refrigerator

## ⚠ CAUTION

- When installed, the refrigerator must be leveled on a flat, solid floor. Not leveling the refrigerator can cause damage to the refrigerator or physical injury.
- Levelling must be performed with the refrigerator empty. Make sure no food items are inside the refrigerator.
- For safety reasons, adjust the front a little higher than the rear.

Level the refrigerator using the special screws (levellers) on the front legs. Use a flat-head screwdriver to turn the levellers.

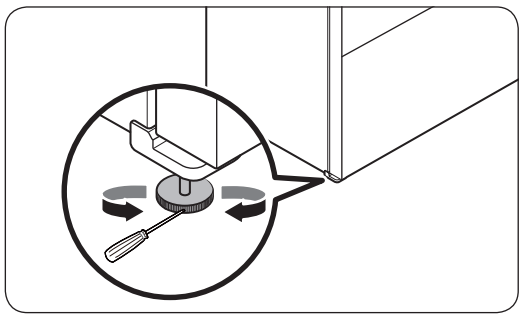

- To adjust the height of the left side: Insert a flat-head screwdriver into the leveller of the left side front leg. Turn the leveller clockwise to raise the left side or turn it counterclockwise to lower.
- To adjust the height of the right side: Insert a flat-head screwdriver into the leveller of the right side front leg. Turn the leveller clockwise to raise the right side or turn it counterclockwise to lower.





Untitled-1 31 2019-01-03 11:43:08

# Installation

## STEP 5 Adjust the door height and the door gap

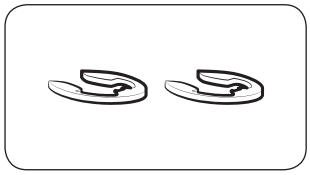

Snap rings

The height of a door can be adjusted using the provided snap rings, which come in 4 different sizes (1 mm, 1.5 mm, 2 mm, and 2.5 mm).

To adjust the height of a door

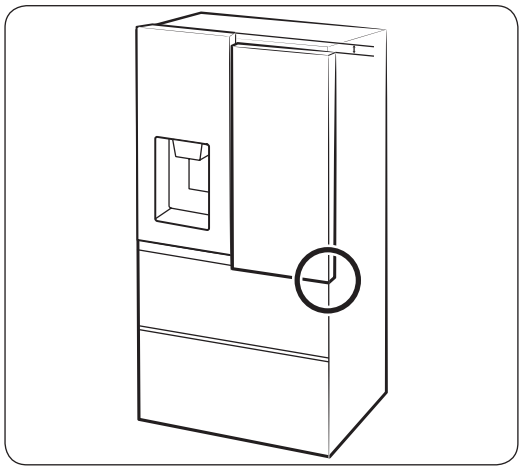

1. Check the height difference between the doors, and then lift up and hold the door with the lower height.

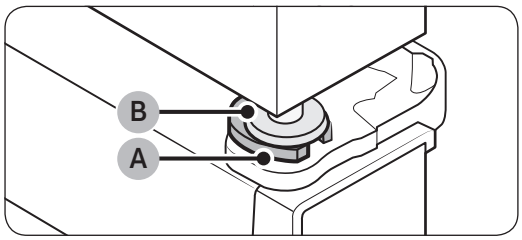


2. Insert a suitable-sized **snap ring (A)** between the **door grommet (B)** and the hinge as shown.

## ⚠ CAUTION

- Insert only one snap ring. If you insert two or more snap rings, the rings may slip out or make a rubbing noise.
- Keep the snap rings out of children's reach and keep them for future use.
- Do not raise the door too much. The door can contact and damage the top cover.





Untitled-1 32
2019-01-03 11:43:09

## STEP 6 Attach the handles

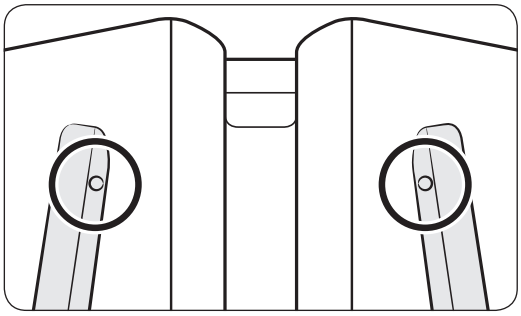

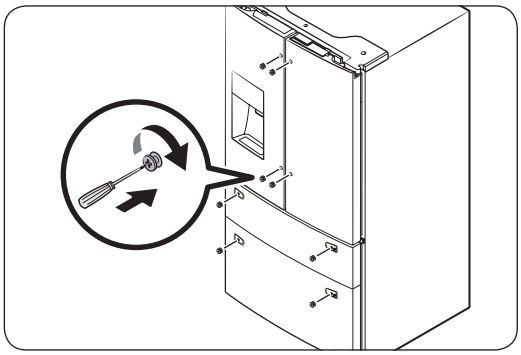

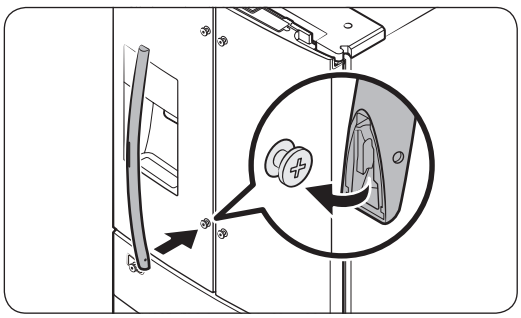

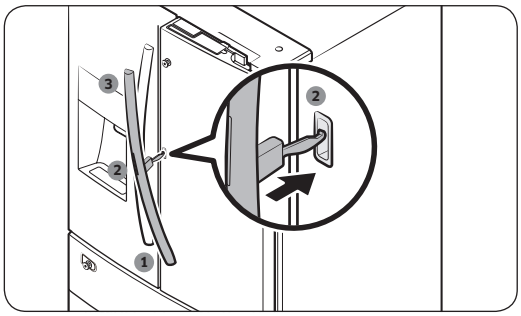


### ⚠ CAUTION

The refrigerator handles must be oriented in the correct direction.

- The fridge handles must be attached so that the holes on each face each other.
- The freezer handle must be attached so that its hole faces downwards.

**1.** Using a Phillips screwdriver, attach the handle screws to the refrigerator, two for each handle respectively, as shown in the illustration to the left.

**2.** To fix the fridge handles to the refrigerator, first place the lower side of one handle onto the lower handle screw.

For type B handle: Attach the handle in order of bottom (1), middle (2), and top (3). (Refer to the figure.)

**NOTE**

The design of the right side door handle may differ depending on your model.





Untitled-1 33 2019-01-03 11:43:09

# Installation



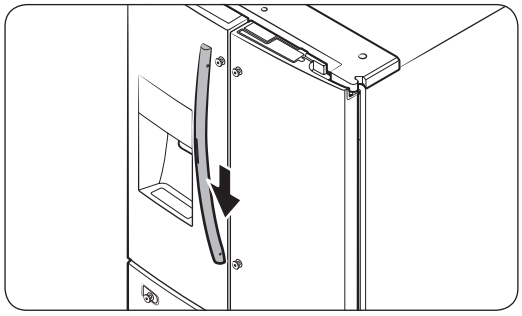

**3.** Push the handle down, and then place the upper side of the handle onto the upper handle screw.

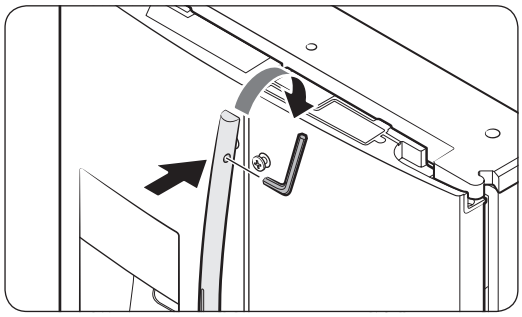

**4.** Insert the supplied wrench into the handle hole, and then turn it clockwise to tighten.

**5.** Repeat Steps 2 through 4 with the second refrigerator door handle.

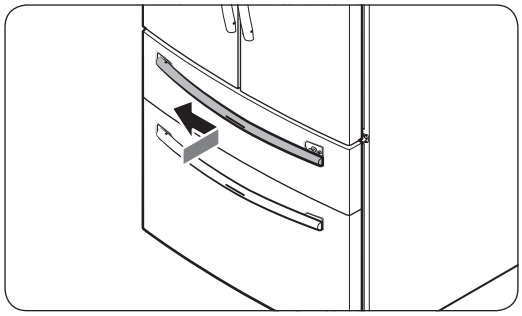

**6.** To fix the freezer handle to the refrigerator, first place the left side of the freezer handle onto the left handle screw.

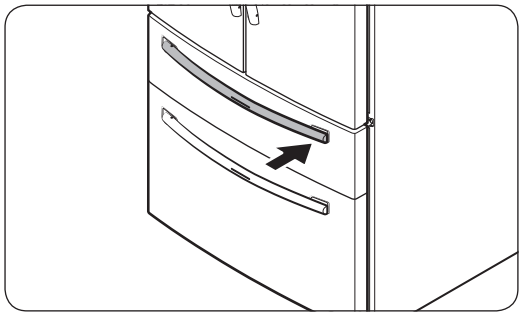

**7.** Push the handle to the left, and then place the right side of the freezer handle onto the right handle screw.



Untitled-1 34 2019-01-03 11:43:10

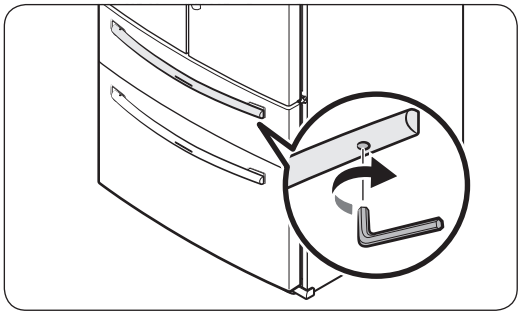

8. Insert the supplied wrench into the handle hole, and then turn it clockwise to tighten.





Untitled-1 35
2019-01-03 11:43:10

# Installation

## STEP 7 Connect the water dispenser line

A water dispenser with a filter is one of the helpful features on your new refrigerator. To help promote better health, the water filter removes unwanted particles from your water. However, it does not sterilize or destroy microorganisms. You may need to purchase a water purifying system to do that.

The water line also connects to the ice maker. For the ice maker to operate properly, water pressure of 20-125 psi is required.

If the refrigerator is installed in an area with low water pressure (below 20 psi), you can install a booster pump to compensate for the low pressure.

After you have connected the water line, make sure the water storage tank inside the refrigerator is properly filled. To do this, press the water dispenser lever until water runs from the water outlet.

**NOTE**

- Water line installation kits are available at extra cost from your retailer. We recommend using a water line installation kit that contains copper tubing and a 1/4" (6 mm) compression nut.

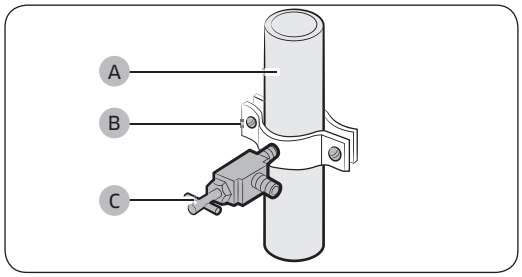


1. Shut off the main water source.
2. Insert the **pipe clamp (B)** and the **shutoff valve (C)** into the **cold water line (A)**.

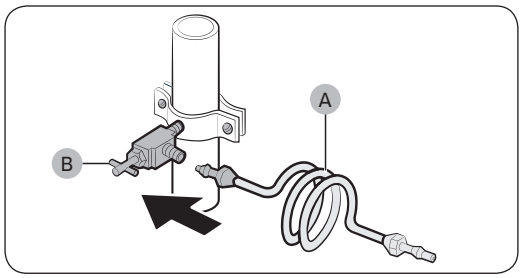


3. Connect the **water line installation kit (A)** to the **shutoff valve (B)**.



Untitled-1 36
2019-01-03 11:43:10

### Connect the water supply line to the refrigerator

There are several items you must purchase to complete this connection. You may find these items sold as a kit at your local hardware store.

| | |
|---|---|
| Copper Tubing | • 1/4" copper tubing<br>• 1/4" compression nut (1 pc)<br>• Ferrule (2 pc) |
| Plastic Tubing | • 1/4" plastic tubing → Molded end (Bulb)<br>• 1/4" compression nut (1 pc) |

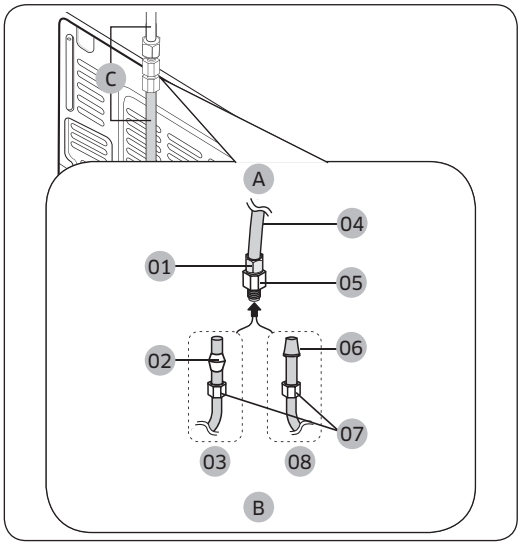


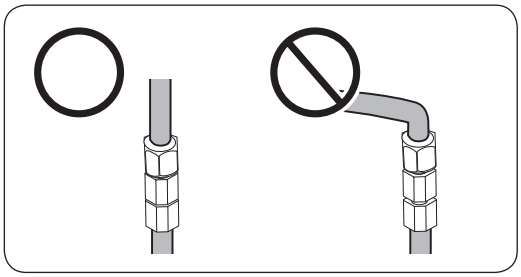

**A.** Refrigerator
**B.** Household water supply line
**C.** Water Line: must be kept straight.

**01** Compression Nut (1/4") (Assembled)
**02** Ferrule (Not supplied)
**03** Copper tubing (Not supplied)
**04** Plastic Tubing (Assembled)
**05** Compression Fitting (Assembled)
**06** Molded end (Bulb)
**07** Compression nut (B) (1/4") (Not supplied)
**08** Plastic Tubing (A) (Not supplied)

**NOTE**

If you have to relocate the refrigerator after connecting the water line (C), make sure the joined section of the water line is straight.



Untitled-1 37
2019-01-03 11:43:11

# Installation

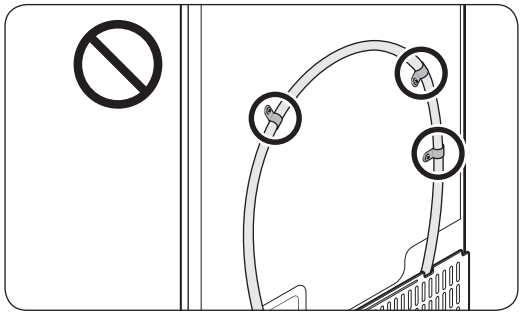

## ⚠ CAUTION

Do not mount the water filter on any part of the refrigerator. This may damage the refrigerator.



1. Connect the household water line to the assembled compression fitting.
   - If you are using copper tubing, slip the **compression nut (B)** (not supplied) and **ferrule** (not supplied) on the copper tubing (not supplied) as shown.
   - If you are using **plastic tubing (A)**, insert the molded end (Bulb) of the **plastic tubing (A)** into the compression fitting.

## ⚠ CAUTION

- If you use **plastic tubing (A)**, do not use it without the molded end (Bulb).
- Leaving the water line disconnected may cause the water valve to produce a buzzing sound over time. If this is the case, make sure that the ice making function is turned "**OFF**" and do not attempt to use the water dispenser.

2. Tighten the **compression nut (B)** onto the **compression fitting**. Do not over-tighten the **compression nut (B)**.
3. Turn the water on and check for any leakage. If you find water drops or leakage in the connection areas, turn off the main water supply. Check the connections and, if necessary, tighten.
4. Flush 1 gallon of water through the filter before drinking or using the water from the refrigerator. (Flush approximately 6 minutes.) To flush, press a large glass or cup against the water dispenser lever. Fill the glass, empty it, and then repeat.
5. After you turn on the refrigerator, let the ice maker make ice for 1 to 2 days. Over that period of time, throw out the first 1 or 2 buckets of ice the ice maker makes to ensure all impurities have been removed from the water line.

**NOTE**

Only connect the water line to a potable water source.

- If you have to repair or disassemble the water line, cut off 1/4" of the plastic tubing to make sure you get a snug, leak-free connection.
- You can test the water line quickly using a paper cup. Under normal conditions, the water dispenser can fill a 5 3/4 oz. (170 cc) cup in about 10 seconds.



Untitled-1 38 2019-01-03 11:43:11

## STEP 8 Initial settings

By completing the following steps, the refrigerator should be fully functioning.

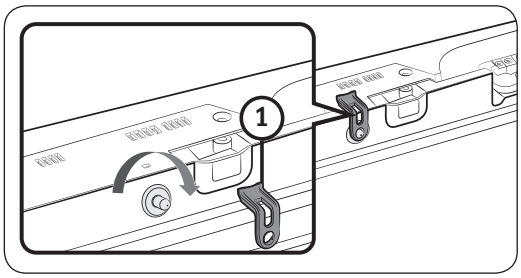


### ⚠ CAUTION

Before installing the refrigerator, make sure to remove the Cover Interlock (1) from the top of the fridge door. Otherwise, injuries may be caused by the ice crushing blade.

1. Plug the power cord into the wall socket to turn the refrigerator on.
2. Open the door, and check if the interior light lights up.
3. Set the temperature to the coldest setting, and wait for about an hour. Then, the freezer will be slightly chilled, and the motor should be running smoothly.
4. Wait until the refrigerator reaches the set temperature. Now the refrigerator is ready for use.

## STEP 9 Final check

When installation is complete, confirm that:

- The refrigerator is plugged into an electrical outlet and grounded properly.
- The refrigerator is installed on a flat, level surface with a reasonable clearance from walls and cabinets.
- The refrigerator is level and is sitting firmly on the floor.
- The door opens and closes freely, and the interior light turns on automatically when you open the door.





Untitled-1 39 2019-01-03 11:43:11

# Operations

## Main panel

Type A

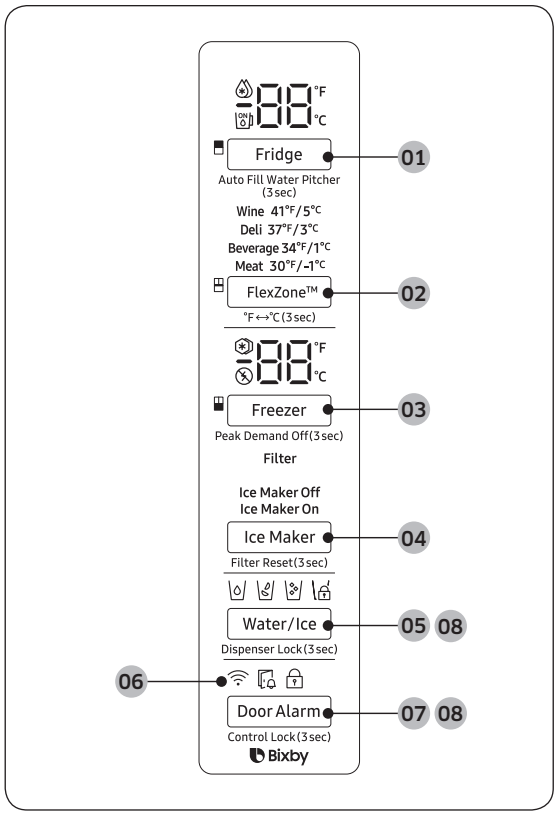


Type B

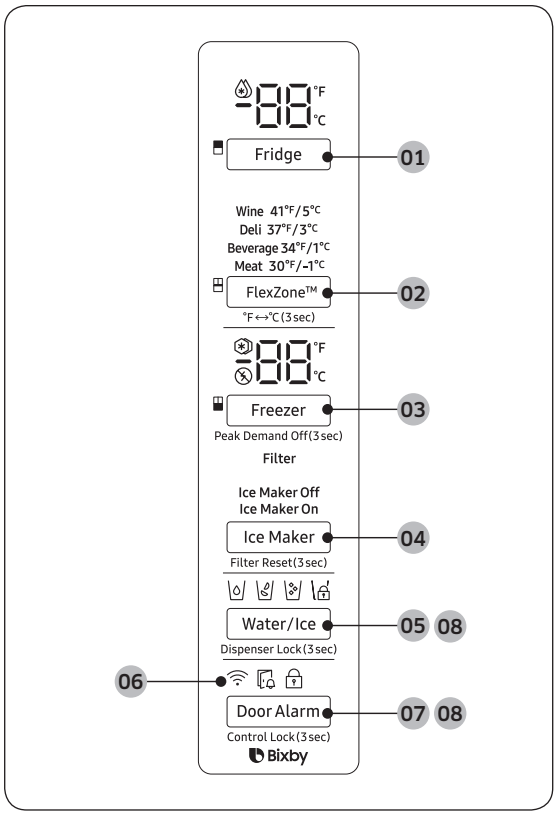


**01** Fridge / Auto Fill Water Pitcher *

**02** FlexZone™ / °F ↔ °C

**03** Freezer / Peak Demand Off

**04** Ice Maker / Filter Reset

**05** Water/Ice / Dispenser Lock

**06** Network connection

**07** Door Alarm / Control Lock

**08** Sabbath Mode

* applicable models only





Untitled-1 40
2019-01-03 11:43:12

**NOTE**

- When you change the temperature on the panel, the panel displays the actual temperature inside the refrigerator until the temperature matches the temperature you set. Then, the panel displays the new set temperature. Note that it will take time for the refrigerator to reach the new temperature. This is normal. During this time, you do not need to set the temperature again.
- To ensure optimal performance, we recommend setting the temperature to 0 °F (-18 °C) for the freezer, and 37 °F (3 °C) for the fridge.
- The temperature in the refrigerator may rise if you open the door frequently or put a large amount of food into the refrigerator. If this happens, the temperature display blinks until the refrigerator returns to the specified temperature settings.
- If a communication error occurs between the temperature display and the main controller, this blinking continues for an extended time. Contact a local Samsung service center for technical assistance.
- The display of the main panel turns on only if the door is opened and turns off if the door is closed.
- If you set Control Lock on the main panel, the main panel locks automatically 1 minute after inactivity.





Untitled-1 41
2019-01-03 11:43:12

# Operations

01 Fridge / Auto Fill Water Pitcher (3 sec)

| | |
|---|---|
| Fridge | You can use the **Fridge** button to set the fridge temperature or to activate Power Cool.<br>• Press **Fridge** repeatedly to select a desired temperature between 34 °F (1 °C) and 44 °F (7 °C).<br>  - The temperature indicator displays the currently set or selected temperature.<br>• To activate Power Cool, press **Fridge** repeatedly until the Power Cool indicator ( ) lights up.<br>  - To deactivate Power Cool, simply press **Fridge** again while the Power Cool function is on.<br>  - Power Cool speeds up the cooling process at maximum power to lower the fridge temperature. The Power Cool process continues to run for several hours, and then the fridge returns to the previous temperature setting.<br>  - Use Power Cool to rapidly cool food that spoils quickly or to rapidly cool the refrigerator after the door has been left open for some time.<br>**NOTE**<br>Using Power Cool increases power consumption. Make sure you turn it off if you no longer need it, and then select the desired temperature. |





Untitled-1 42 2019-01-03 11:43:12

| | |
|---|---|
| Auto Fill Water Pitcher | Press and hold **Fridge** for 3 seconds to turn this function on. Open the left door of the fridge, and then insert the water tank. Close the door and the water tank starts to fill with water up to the preset level.<br>To turn the function off, press and hold **Fridge** again for 3 seconds.<br>**NOTE**<br>• By default, Auto Fill Water Pitcher is disabled. Enable this function after you have installed the water line.<br>• If you open the door or push the dispenser lever, this function is stopped temporarily.<br>• The Auto Fill Water Pitcher indicators blink if there is a leak. This may occur because the water tank overflows, or the water-line or water-level sensor fails. If this is the case, follow these steps.<br>**a.** Open the rubber cap and drain water.<br>**b.** When draining is complete, the indicators stop blinking and turn solid.<br>**c.** Close the rubber cap.<br>• If the indicators continue to blink, this might be a system failure. Contact a local service center. |





Untitled-1 43 2019-01-03 11:43:12

# Operations

### 02 FlexZone™ / °F ↔°C (3 sec)

The FlexZone™ is a full-width drawer featuring temperature control. It has a temperature sensor that adjusts the amount of cold air allowed into the zone.

- Press **FlexZone™** repeatedly to select a desired mode. By default, **Deli** is selected.
- The refrigerator adjusts the temperature in the FlexZone™ according to the selected mode.

| Mode | Description | Examples |
|---|---|---|
| Wine | Select Wine to keep food fresh for a long time.<br>The temperature of the FlexZone™ will be kept around 41 °F (5 °C). | Wine, cocktails, cake, cheese |
| Deli | Select Deli to keep food fresh for a longer time.<br>The temperature of the FlexZone™ will be kept around 37 °F (3 °C). | Pineapples, lemons, biscuits, potatoes |
| Beverage | Select Beverage to keep drinks cold and refreshing.<br>The temperature of the FlexZone™ will be kept around 34 °F (1 °C). | Bottled water, juice, soft drinks, beer |
| Meat | Select Meat to keep meat or fish fresh for a longer time.<br>The temperature of the FlexZone™ will be kept around 30 °F (-1 °C). | Steaks, cold cuts, bacon, chili dogs |

## ⚠ CAUTION

- Do not use the FlexZone™ to store most kinds of fruit or leafy vegetables. These food items may suffer cold-temperature damage.
- Do not store glass bottles in the FlexZone™ in Beverage or Meat mode. They may break and cause physical injury.

| | |
|---|---|
| °F ↔°C | You can also use the FlexZone™ button to switch the temperature scale between Celsius and Fahrenheit.<br>To switch the temperature scale, press and hold **FlexZone™** for 3 seconds to change the current temperature scale. |





Untitled-1 44 2019-01-03 11:43:12

03 Freezer / Peak Demand Off (3 sec)

| | |
|---|---|
| Freezer | You can use the **Freezer** button to set the freezer temperature or to activate Power Freeze.<br>• Press **Freezer** repeatedly to select a desired temperature between 5 °F (-15 °C) and -8 °F (-23 °C).<br>- The temperature indicator displays the currently set or selected temperature.<br>• To activate Power Freeze, press **Freezer** repeatedly until the Power Freeze indicator ( ) lights up.<br>- To deactivate Power Freeze, simply press **Freezer** again while the Power Freeze function is on.<br>- Power Freeze speeds up the freezing process at maximum power to lower the freezer temperature. The Power Freeze process continues to run for several hours, and then the freezer returns to the previous temperature setting.<br>- To freeze large amounts of food, activate Power Freeze for at least 20 hours before putting the food in the freezer.<br>**NOTE**<br>Using Power Freeze increases power consumption. Make sure you turn it off i you no longer need it, and then select the desired temperature. |
| Peak Demand Off | The Peak Demand Off function activates/deactivates Smart Grid. (See Page **53**)<br>Press **Freezer** for 3 seconds to set/clear the Peak Demand Off function. |





Untitled-1 45 2019-01-03 11:43:12

# Operations

04 Ice Maker / Filter Reset (3 sec)

| | |
|---|---|
| Ice Maker | Press **Ice Maker** to turn the ice maker on or off.<br>The ice maker has 2 indicators (**Ice Maker On** / **Ice Maker Off**) to indicate its operating status.<br>• When the ice maker operates, the corresponding indicator (**Ice Maker On**) turns on.<br>• When the ice maker is turned off, the corresponding indicator (**Ice Maker Off**) turns on. In this case, ice making is disabled even if you press the **Cubed** or **Crushed Ice** buttons on the dispenser panel. To enable ice making, you must turn the ice maker on.<br>**NOTE**<br>If the ice maker is turned off, it will turn on if you press and hold the **ice lever** for more than 5 seconds. |
| Filter Reset | After about 6 months (and typically, about 300 gallons (1200 L) of water), the Filter indicator blinks red for several seconds when you open the door, reminding you that the filter needs to be replaced.<br>When this happens, replace the filter, and then press and hold **Filter Reset** for 3 seconds. The filter lifecycle will be reset and the Filter indicator turns off.<br>**NOTE**<br>• Some regions have relatively large amounts of lime in their water. This can reduce the lifecycle of the filter. In these areas, you will have to replace the water filter more often than specified above.<br>• If water is not dispensing properly, the water filter is most likely clogged. Replace the water filter. |





Untitled-1 46 2019-01-03 11:43:12

### 05 Water/Ice / Dispenser Lock (3 sec)

| | |
|---|---|
| Water/Ice | You can dispense chilled water, cubed ice, or crushed ice. To dispense, press **Water/Ice**. The corresponding indicator turns on. |
| Dispenser Lock<br>(Dispenser panel / Dispenser lever) | To prevent use of the dispenser panel buttons and the dispenser lever, press and hold **Water/Ice** for more than 3 seconds.<br>If you press and hold the button again for more than 3 seconds, the dispenser lock will be deactivated.<br>**NOTE**<br>• The **Dispenser Lock** on the dispenser panel does not affect the controls on the main panel. To lock the main panel, use the Control Lock function on the main panel.<br>• If you press **Water/Ice** for 3 seconds when both control lock and dispenser lock is active, it will deactivate both control lock and dispenser lock. |

### 06 Network connection

You can control and monitor your refrigerator on the SmartThings app. For more information, see the **SmartThings** section.

### 07 Door Alarm / Control Lock (3 sec)

| | |
|---|---|
| Door Alarm | If the door is left open for more than 2 minutes, an alarm will sound and the alarm indicator will blink. You can toggle the alarm on and off by pressing **Door Alarm**. The alarm is enabled by factory default.<br>If the door is left open for 5 minutes, internal lights (in the fridge, FlexZone™, and freezer) will blink for 10 seconds and then turn on. This will be repeated every minute for 5 minutes. This is to alert hearing-impaired users that a door is open and it is normal. |





Untitled-1 47 2019-01-03 11:43:13

# Operations

| | |
|---|---|
| Control Lock | To prevent accidental setting changes, press and hold **Door Alarm** for 3 seconds. The main panel will be disabled and the Lock indicator ( ) will turn on.<br>When Control Lock is on, the indicator blinks if any button on the main panel is pressed.<br>If you press and hold the button again for more than 3 seconds, Control Lock will be deactivated.<br>However, Control Lock will be reactivated if no button is pressed within 1 minute.<br>**NOTE**<br>Control Lock on the main panel does not affect the dispenser. The dispenser operates independently and so does the dispenser lever. To lock the dispenser and the dispenser lever, use the Dispenser Lock function. |
| Device authentication | When connecting the refrigerator to the SmartThings App or Samsung smart devices such as Samsung Smart TVs, follow the app's or device's onscreen instructions and press and hold **Door Alarm** for 5 seconds. The temperature panel displays "on" for 5 seconds before proceeding with the authentication procedure. Note that the Control Lock function will be not affected by the authentication process. |





Untitled-1 48 2019-01-03 11:43:13

### 08 Sabbath Mode

The Sabbath mode stays active for 85 hours once it is activated. After that, it will be deactivated automatically.

- To activate Sabbath Mode, press and hold **Door Alarm** and **Water/Ice** simultaneously for 5 seconds. When the refrigerator is in Sabbath mode, the buttons, the display, and the room lamps do not function. The refrigerator and freezer, however, continue to cool.
- To deactivate Sabbath Mode, press and hold **Door Alarm** and **Water/Ice** simultaneously again for 5 seconds.

**NOTE**

If the refrigerator powers off and restarts, the Sabbath mode remains active. To end Sabbath Mode, you must deactivate it as described above.

### 09 Cooling Off

Cooling Off mode (also called Shop mode) is designed for use by retailers when they are displaying refrigerators on a retail floor.

In Cooling Off mode, the refrigerator's fan motor and lights operate normally, but the compressors do not run so neither the refrigerator nor the freezer become cold.

To enter or exit the Cooling Off mode, press and hold **Fridge** and **FlexZone™** simultaneously for 6 seconds. Then, when the display blinks, press **Door Alarm**.

When the Cooling Off mode is on, the refrigerator chime sounds, and the refrigerator shows "**0**" on the fridge temperature display and "**FF**" on the freezer temperature display.





Untitled-1 49 2019-01-03 11:43:13

# Operations

## SmartThings

### Installation

Visit the Google Play Store, Galaxy Apps, or Apple App Store and search for “SmartThings”. Download and install the SmartThings app provided by Samsung Electronics to your smart device.

**NOTE**

- The SmartThings app is designed for Android 6.0 (Marshmallow) or later, iOS 10.0 or later, iPhone 6 or later, and is optimized for Samsung smartphones (Galaxy S and Galaxy Note series).
- For improved performance, the SmartThings app is subject to change without notice or discontinued support according to the manufacturer’s policy.
- Recommended encryption systems include WPA/TKIP and WPA2/AES. Any newer or non-standard Wi-Fi authentication protocols are not supported.
- Wireless networks may be affected by the surrounding wireless communication environment.
- If your Internet service provider has registered the MAC address of your PC or modem for identification, your Samsung Smart Refrigerator may fail to connect to the Internet. If this happens, contact your Internet service provider for technical assistance.
- The firewall settings of your network system may prevent your Samsung Smart Refrigerator from accessing the Internet. Contact your Internet service provider for technical assistance. If this symptom continues, contact a local Samsung service center or retailer.
- To configure the wireless access point (AP) settings, see the user manual of the AP (router).
- Samsung Smart Refrigerators support both Wi-Fi 2.4 GHz with IEEE 802.11 b/g/n and Soft-AP protocols. (IEEE 802.11 n is recommended.)
- Unauthorized Wi-Fi wireless routers may fail to connect to applicable Samsung Smart Refrigerators.





Untitled-1 50 2019-01-03 11:43:13

### Samsung account

You are required to register your Samsung account to use the app. If you don’t have a Samsung account, follow the app’s onscreen instructions to create a free Samsung account.

### Getting started

Turn on the device you want to connect, open the SmartThings app on your phone, and then follow the instructions below.

If a pop-up appears saying that a new device has been found, tap **ADD NOW**.

If a pop-up doesn't appear, tap the **+** button, and then select the device you want to connect from the list of available devices.

If your device isn't in the list of available devices, tap **Supported Devices**, select the device type (Refrigerator), and then select the specific device model.

Follow the instructions in the app to set up your device. Once setup is complete, your refrigerator will appear as a "card" on your **Devices** screen.

## Refrigerator app

### Integrated control

You can monitor and control your refrigerator at home and on the go.

- Tap the refrigerator icon on the SmartThings Dashboard or tap the Devices icon at the bottom of the Dashboard, and then tap the refrigerator "card" to open the Refrigerator page.
- Check the operation status or notifications related to your refrigerator, and then change options or settings if necessary.

**NOTE**

Some options or settings of the refrigerator may not be available for remote control.





Untitled-1 51 2019-01-03 11:43:13

# Operations

| Category | Item | Description |
|---|---|---|
| Monitoring | Fridge temperature | Displays the desired temperature setting of the fridge. |
| | Freezer temperature | Displays the current temperature of the freezer. |
| | FlexZone™ settings | Displays the settings of the FlexZone™. |
| | Diagnosis | Detects abnormal operations of the refrigerator. |
| | Energy monitoring | Checks the accumulated power consumption of the refrigerator for the last 180 days. |
| Functions | Ice making | You can turn the ice making function on or off, and check the current settings of the function. |
| | | You can also check the status and progress of ice making. |
| | Power Cool | You can turn Power Cool on or off, and check the current settings. |
| | Power Freeze | You can turn Power Freeze on or off, and check the current settings. |
| | Fridge temperature | You can set the desired temperature of the fridge. |
| | Freezer temperature | You can set the desired temperature of the freezer. |
| | FlexZone™ settings | You can set the desired FlexZone™ mode. |
| | Sabbath Mode | You can activate and deactivate the Sabbath mode. |
| Alarms | Abnormally high temperature | This alarm is triggered when the fridge, the freezer, or the FlexZone™ has abnormally high temperatures. |
| | Door opening | This alarm is triggered if the fridge door, the freezer drawer, or the FlexZone™ drawer is open for a specific time. |
| | Auto Water Fill overflowing | If the Auto Water Fill function senses an overflow, it triggers this alarm to let you know the status of the overflow. |
| | Water filter replacement | This alarm reminds you that the water filter must be replaced. |





Untitled-1 52 2019-01-03 11:43:13

## SMART GRID Function (Demand Response)

When the refrigerator operates in SMART GRID (Demand Response) mode, the Energy Management Refrigerator function can control energy usage or delay the operation of some functions to save money when energy prices or demand are the highest.

**NOTE**

- You can deactivate the SMART GRID (Demand Response) function at any time using the Peak Demand Off function.
- To use the SMART GRID (Demand Response) function, you need a separate contract with your electric utility company.

In addition, to use the Smart Grid (Demand Response) function, you must register for the service with your electric company. The company must have an EMS (Energy Management System) that supports SEP (Smart Energy profile).

### Using the SMART GRID (Demand Response) Function

This feature monitors energy prices and demand information from your utility company and sends notifications to the refrigerator to run high energy consuming tasks during off-peak times when electricity costs and demand are lower.

If the refrigerator receives a control signal from the utility company, the refrigerator will display the **DAL** (L3) ~ **TALR** (L4) levels on the refrigerator display and control the power consumption according to the level.

[Exception condition] The **DAL** and **TALR** control signals from a utility company work as long as product performance is maintained.

If the refrigerator receives the SMART GRID (Demand Response) signal (**DAL** or **TALR**), the refrigerator will operate in Delay Appliance Load (Display:L3) or Temporary Appliance Load Reduction (Display:L4) mode.

- Delay Appliance Load (L3): The refrigerator responds to a **DAL** signal by providing a moderate load reduction for the duration of the delay period. This function controls functions that consume a lot of energy such as adjusting the Cooling system, running the defrost cycle, and making ice.
  - When the refrigerator operates in **DAL** (L3) mode, “L3” is displayed on the refrigerator display.
  - **DAL** mode is automatically deactivated after it lasts for the amount of time stipulated by the **DAL** signal (max. 4.5 hours) or when the Peak Demand Off key is pressed.





Untitled-1 53 2019-01-03 11:43:13

# Operations

- Temporary Appliance Load Reduction (L4): The refrigerator responds to a **TALR** signal by aggressively reducing the load for a short time period. This function reduces energy consumption by stopping the compressor and controlling the functions that consume a lot of energy such as the defrost cycle and making ice.
  - When the refrigerator operates in **TALR** (L4) mode, “L4” is displayed on the refrigerator display.
  - **TALR** (L4) mode is automatically deactivated after it lasts for the received duration (max. 15 minutes), or when the Peak Demand Off key is pressed. The mode is immediately deactivated and the refrigerator returns to the normal state when the door is opened or closed, or the dispenser is used.

### To check the MAC address

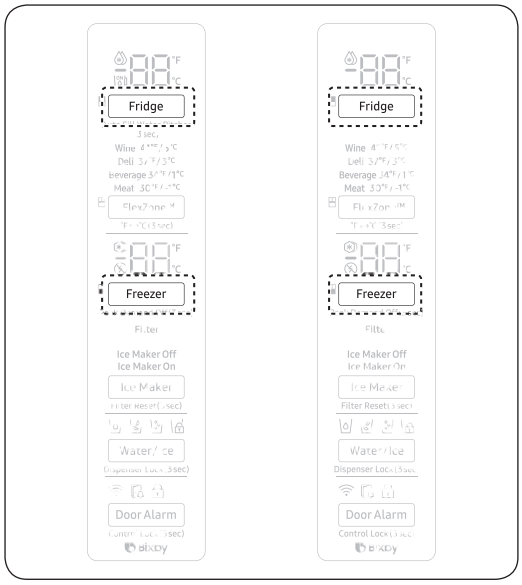


1. In this mode, the MAC address appears on the temperature panel (on both the freezer and the fridge sections of the panel) sequentially for 1 minute.
   Press and hold both **Freezer** and **Fridge** for 6 seconds. The temperature panel blinks. Then, press **Freezer** again to display the MAC address. The fridge beeps.
2. For example, if the MAC address is "11-22-33-44-55-66", the temperature panel displays the address for 1 minute in this sequence: "-- / --" → "11 / 22" → "33 / 44" → "55 / 66" → "-- / --".
   After the 1 minute, the MAC address disappears and the temperature panel returns to the normal state.

**NOTE**

The temperature panel displays "-- / --" for an unknown MAC address or if a Wi-Fi connection is not established or is lost.

### Peak Demand Off (Override mode)

When you want the refrigerator to ignore the SMART GRID (Demand Response) signal from the utility company, you can activate Peak Demand Off (Override mode).

When you activate Peak Demand Off (Override mode), the refrigerator ignores the SMART GRID (Demand Response) signal and is not controlled by the utility company.





Untitled-1 54
2019-01-03 11:43:13

### Activating and deactivating Peak Demand Off (Override mode)

1. Press and hold **Freezer** for 3 seconds.
2. A buzzer sounds and ‘Or’ and ‘on’ is displayed in the freezer and fridge temperature display for 5 seconds. Then the Peak Demand Off (Override mode) icon ( ) turns on.
3. If the refrigerator receives a SMART GRID (Demand Response) signal from the utility company, ’Or’ is displayed in the freezer temperature display.
4. To deactivate Peak Demand Off (Override mode) , press and hold **Freezer** for 3 seconds.
5. A buzzer sounds and ‘Or’ and ‘oF’ is displayed in the freezer and fridge temperature display for 5 seconds. Then the Peak Demand Off (Override mode) icon ( ) turns off.

**NOTE**

- Alternatively, you can activate or deactivate Peak Demand Off (Override mode) using the SmartThings app and the Energy Management function. See the next page.





Untitled-1 55 2019-01-03 11:43:13

# Operations

## Using the Energy Management Function

The Energy Management function enables you to control and monitor your Energy Management refrigerator using the SmartThings app for your convenience.

**NOTE**

- To use the Energy Management refrigerator functions, you have to install the corresponding app first.

1. Operational Status
   - You can check the DR and Peak Demand Off (Override mode) status.
2. Energy Consumption Reporting
   - Shows the accumulated power consumption. Power consumption data is updated every 10 minutes.

**NOTE**

The energy consumption report may differ from the power consumption specifications of the product depending on the operating environment and the stored food.

3. Delay Defrost Capability
   - The Delay Defrost Capability function saves energy by delaying the defrost operation to a time specified by the user. You can configure the time. and this function will save energy during the specified period in a 24 hour cycle. If the time is not set, the function works with the default time settings. The default time settings are below:
   - 6 am to 10 am: 1st. November ~ 30th. April
   - 3 pm to 7 pm: 1st. May ~ 31th. October

### To change the time setting for the Delay Defrost Capability

You can change the time setting for the Delay Defrost Capability on the app.





Untitled-1 56 2019-01-03 11:43:14

## Provision for Open Access to the Connected Product Requirements

1. SGIP Open Standards (Smart Energy Profile 2.0 - http://www.csep.org/)
   - Energy Consumption Reporting
   - Demand Response
2. Samsung OPEN API
   - Operational Status, User Settings & Messages
   - ICE Maker Status: GET /icemaker/status/vs/0
   - Door Open Alarm: GET /doors/vs/0
   - DR Status: GET /drlc/vs/0
   - Delay Defrost Capability
   - Set Schedule of the Defrost Delay: POST /defrost/reservation/vs/0?op=add
   - Get Schedule of the Defrost Delay : GET /defrost/reservation/vs/0
   - Delete Schedule of the Defrost Delay: POST /defrost/reservation/vs/07op=remove
   - Defrost Delay On/OFF: POST /defrost/delay/vs/0





Untitled-1 57 2019-01-03 11:43:14

# Operations

## Dispenser panel

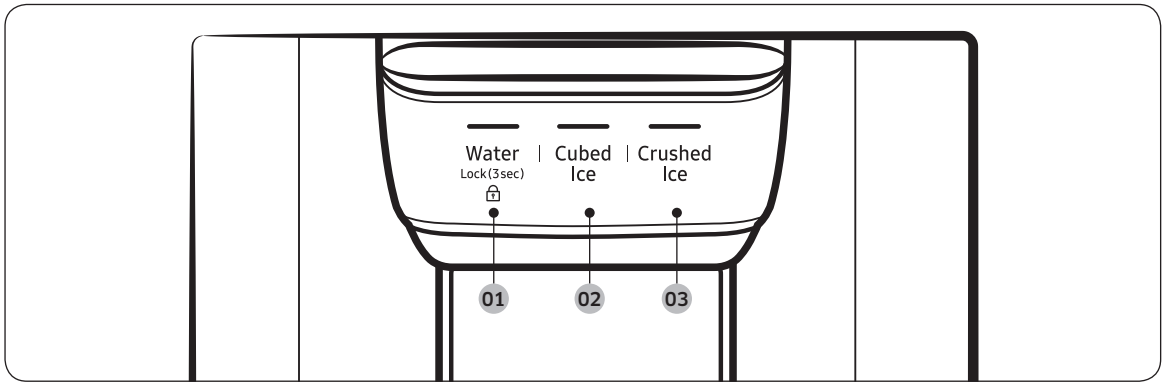


**01** Water / Lock **02** Cubed Ice

**03** Crushed Ice

### 01 Water / Lock (3 sec)

| | |
|---|---|
| Water | To dispense chilled water, press **Water**. The corresponding indicator turns on. |
| Lock<br>(Dispenser panel / Dispenser lever) | To prevent the use of the dispenser panel buttons and the dispenser lever, press and hold **Water** for more than 3 seconds.<br>If you press and hold the button again for more than 3 seconds, the dispenser lock will be deactivated.<br>When dispenser lock is on, the indicator blinks if any button on the dispenser panel is pressed or the dispenser lever is pressed.<br>**NOTE**<br>The **Lock** on the dispenser panel does not affect the controls on the main panel. To lock the main panel, use the Control Lock function on the main panel. |

### 02 Cubed Ice

| | |
|---|---|
| Cubed Ice | Press **Cubed Ice** to dispense cubed ice. The corresponding indicator turns on. |

### 03 Crushed Ice

| | |
|---|---|
| Crushed Ice | Press **Crushed Ice** to dispense crushed ice. The corresponding indicator turns on. |





Untitled-1 58 2019-01-03 11:43:14

## Special features

### Water tank (Auto Water Fill) (applicable models only)

The Auto Water Fill function lets you enjoy cold brewed tea in your refrigerator.

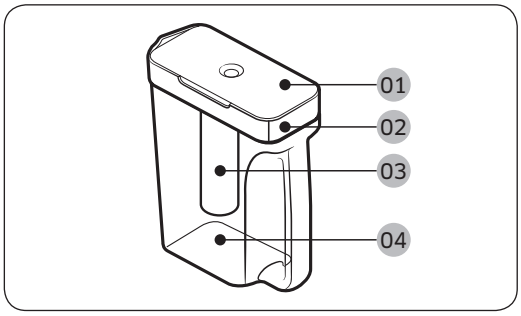


**01** Lid
**02** Sealed mouth
**03** Infuser
**04** Body

To fill the water tank

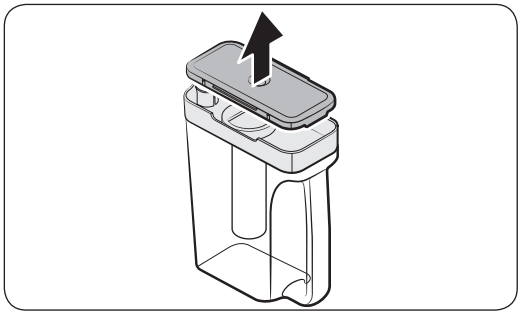

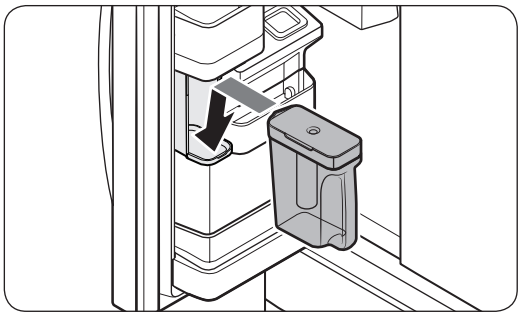

1. Grasp a handle groove of the **sealed mouth**, and then pull up to open the **lid**.
2. Put tea leaves or fruit to your taste into the infuser.

**NOTE**

If you want to keep the infused water in its initial concentration, turn the Auto Water Fill function off.

3. Enable the Auto Water Fill function on the main panel. Open the left door of the fridge door, and then mount the water tank onto the holder. Push it straight in as shown in the illustration on the left.
4. Close the door. The infuser will start to fill with chilled water a short time later.

**⚠ CAUTION**

Make sure the infuser fits in the water tank holder.





Untitled-1 59
2019-01-03 11:43:14

# Operations

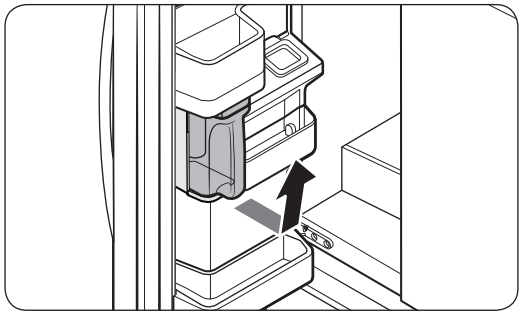

**5.** To drink tea, open the door and detach the water tank. Pull it straight out.

## ⚠ CAUTION

- We recommend consuming fruit infused water within 24 hours. After that, the infused water can spoil over time.
- You must clean the water tank after you have consumed the infused water or if a long time has passed without your using the water tank.

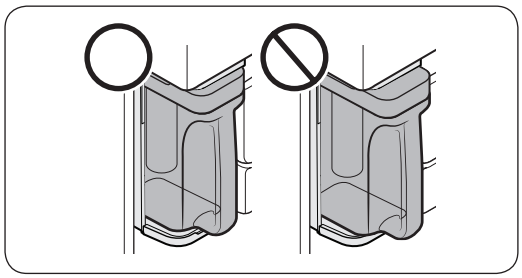

- To prevent the water tank from tipping over or leaking, make sure the water tank fits in the water tank holder.

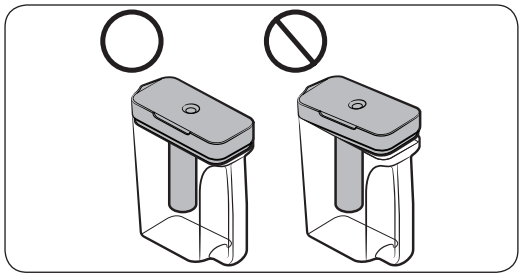

- To prevent the water tank from spilling over or leaking, make sure the **sealed mouth** is properly inserted.



Untitled-1 60 2019-01-03 11:43:15

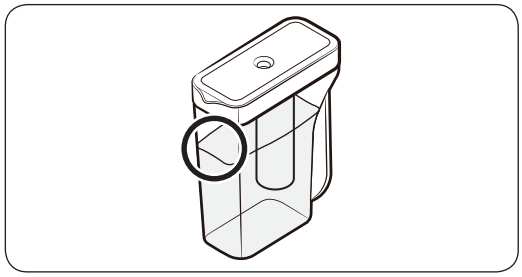

**NOTE**

- If the front side (specifically marked area) of the water tank has too much moisture, the water tank may not fully fill. Remove the moisture, and then try again.
- Auto Water Fill will stop supplying water to the water tank if the water tank does not fill after a certain amount of time. If this happens, check if the water line is properly connected. Remove and reinsert the water tank, and then try again.

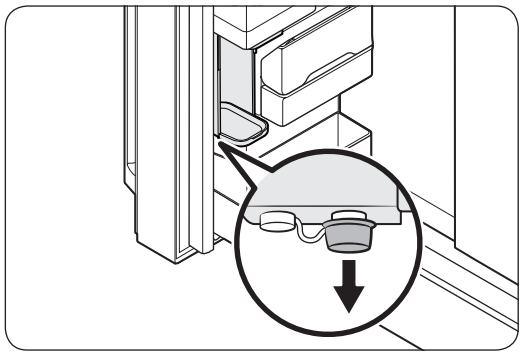

**NOTE**

- Wipe around the infuser holder if the infuser overflows or leaks.
- Water drops off if the rubber cap is opened.
- The Auto Water Fill indicator blinks if there is a leak. In case of a leak, open the rubber cap so that the leaked water drains. The indicator will then turn off. However, if the indicator continues to blink, there might be a system failure. Contact your local Samsung service center.
- The Auto Water Fill indicators blink if there is a leak. See page 42 for more information.





Untitled-1 61 2019-01-03 11:43:15

# Operations

## Water/Ice dispenser

Using the dispenser, you can dispense water with or without ice.

The water dispenser offers 3 options: chilled water, cubed ice, and crushed ice. To dispense chilled water, press **Water** on the dispenser panel. Put a water glass under the dispenser, and then push the dispenser lever.

### To dispense water with ice

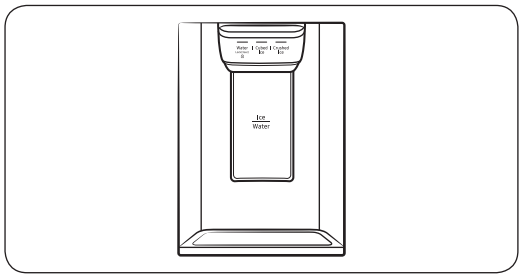


1. With the Ice Maker enabled, press **Cubed Ice** or **Crushed Ice** to select the ice type.
2. Put a water glass under the dispenser, and then push the **dispenser lever** with the glass. Ice will be dispensed from the dispenser.
3. Press **Water** to select water.
4. Push the **dispenser lever** with the glass. Water will be dispensed from the dispenser.

**NOTE**

- The dispenser will stop dispensing if you keep pushing the dispenser lever for about 1 minute. To dispense more water, release and push the lever again.
- Make sure the glass is in line with the dispenser to prevent the dispensed water from spilling out.
- If you do not use the water dispenser for 2-3 days, the dispensed water may have an abnormal smell or taste. This is not a system failure. Discard the first 1-2 glasses of water.

## Ice maker

The refrigerator has a built-in ice maker that automatically dispenses ice so that you can enjoy filtered water with cubed or crushed ice.

### Ice making

After you have installed your refrigerator and plugged it in, follow these instructions to ensure proper ice making and to keep the ice bucket full of ice:

1. Let the refrigerator operate for at least 24 hours to ensure optimal performance.
2. Dispense the first 4 to 6 ice cubes into a glass.
3. Wait another 8 hours and dispense another 4 to 6 ice cubes.
4. Then, wait another 16 hours and dispense the first glass-full of ice.





Untitled-1 62
2019-01-03 11:43:15

**NOTE**

- If you consume all the ice at once, you must wait 8 hours before dispensing the first 4 to 6 cubes. This ensures that the ice bucket is filled with ice properly.
- Ice cubes generated rapidly may look white, which is normal.

Diagnosis

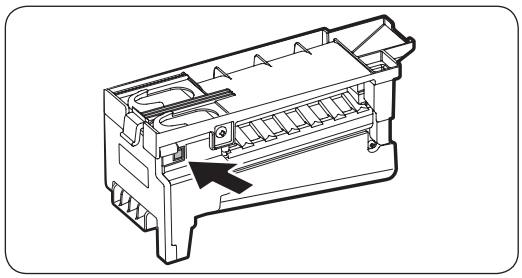

If ice does not dispense, first check the ice maker.

1. Press **Test** on the side of the ice maker. You will hear a chime (ding-dong) when you press the button.
2. You will hear another chime if the ice maker is operating properly.

## ⚠ CAUTION

- If the ice making chime rings repeatedly, contact your waterline installer or a local Samsung service center.
- Do not press **Test** repeatedly after the ice tray is filled with ice or water. Water may overflow or ice may jam.
- Do not put food in the ice bucket. The frozen food may damage the ice maker, especially when you open or close the door.
- When the refrigerator recovers power after a power failure, the ice bucket may contain a mix of melted and jammed ice cubes, which can prevent the ice maker from working properly. To prevent this, make sure to empty the ice bucket so the ice bucket can refill with fresh, loose ice cubes.
- Do not put fingers or any objects into the dispenser outlet or the ice maker. This can cause physical injury or property damage.
- When reinserting the ice maker tray, make sure that the tray is properly centered at the entrance. Otherwise, the tray can get stuck.

If You Turn the Ice Maker Off

If you press and hold **Ice Maker** for more than 3 seconds to turn the ice maker off, make sure to remove all ice cubes from the ice bucket. Remaining ice cubes may clump together, making it difficult to remove them.

To remove the ice bucket, see the **Ice bucket (applicable models only)** section on page **65**.

**NOTE**

- Removal of the ice bucket does not affect the thermal and mechanical performance of the refrigerator.





Untitled-1 63 2019-01-03 11:43:15

# Operations

### Water clouding

Water supplied to the refrigerator flows through a core alkaline filter. During this filtering process, the water pressure of the water increases and the water becomes saturated with oxygen and nitrogen. This causes the water to look misty or cloudy temporarily when dispensed. This is normal and the water will look clear after a few seconds.

## FlexZone™ divider

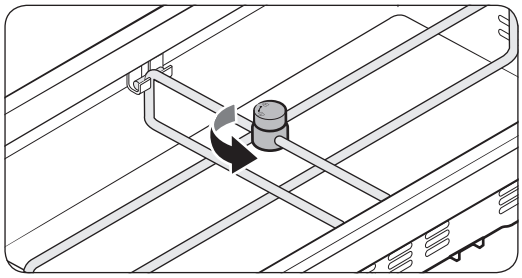

You can change the divider position.

To do this, unlock the divider by turning the divider dial counter clockwise. Then, move the width and height bars as appropriate. When done, turn the dial clockwise to lock the divider.

**NOTE**

If the divider lock does not function, wipe the bars to remove moisture on them.





Untitled-1 64 2019-01-03 11:43:16

# Maintenance

## Handling and care

### Ice bucket (applicable models only)

If you do not dispense ice for an extended period, ice may form clumps inside the bucket. If this happens, remove and empty the ice bucket.

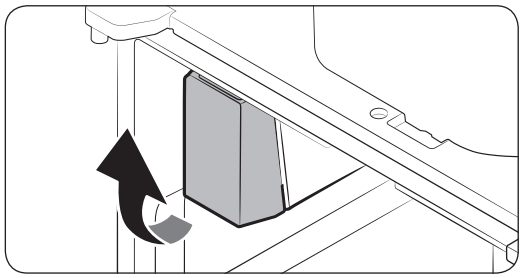

1. To remove the ice bucket, gently lift it up, and then pull it out slowly while holding the bottom of the bucket with one hand and the side with the other hand.
2. Empty the bucket.

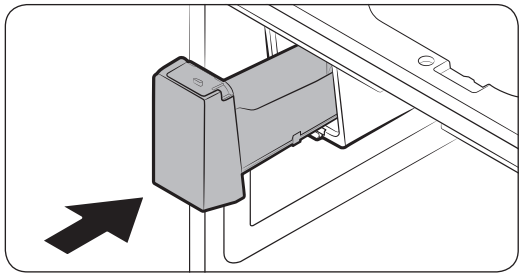

3. When done, put the bucket back into position. If the bucket does not fit in, turn the helix screw 90 degrees, and then try again.

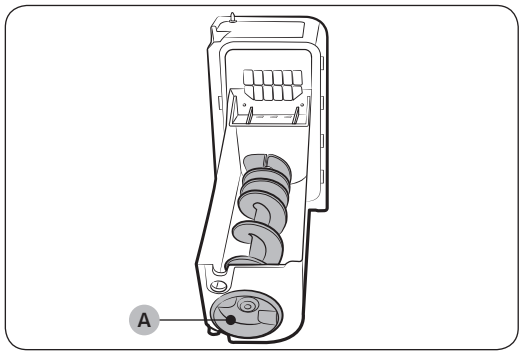


If the ice bucket is not firmly inserted, turn the **Helix (A)** 90 degrees, and then try again.

## ⚠ CAUTION

- Do not apply excessive force to the bucket cover. The cover may break.
- Do not forcefully close the door. Water may spill over the ice maker.
- To prevent injury, make sure to clean up any ice or water that has fallen on the floor.
- To prevent accidents or injury, do not let children play with the water dispenser or the ice maker.





Untitled-1 65
2019-01-03 11:43:16

# Maintenance

- Do not put your hand or an object into the ice chute. This may cause physical injury or product damage.
- Use only the provided ice bucket. Third-party ice buckets may cause a system failure.

**NOTE**

- The water pressure required for ice making is between 20 psi and 125 psi (138 and 862 kPa).
- Noise from the the ice maker as it produces ice during the ice making process is normal.
- While the door is open, neither the ice maker nor the water dispenser operates.





Untitled-1 66 2019-01-03 11:43:16

## Auto Water Fill

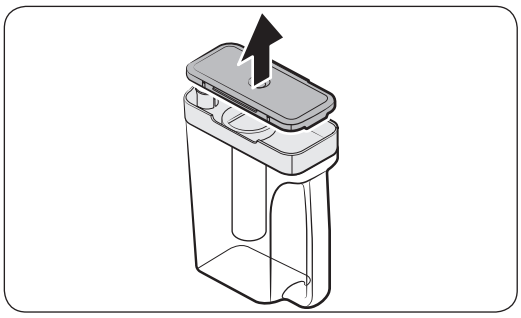

1. Grasp a handle groove of the **sealed mouth**, and then pull up to remove.

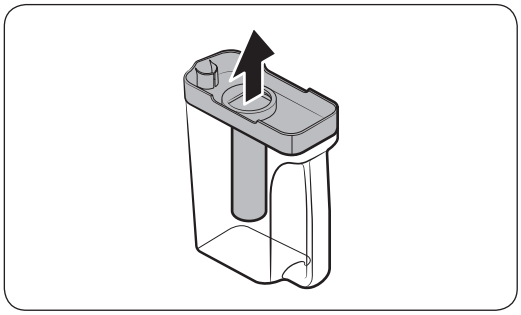

2. Grasp both sides of the **sealed mouth**, and then lift to remove.

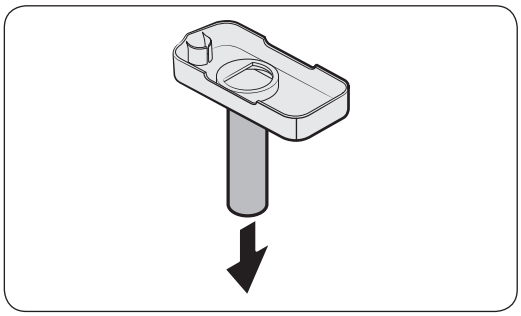

3. While slightly twisting the **infuser**, pull it out of the sealed mouth.
4. Clean the **infuser** with neutral agents and running water. Rinse and dry well.
5. Reassemble the Auto Water Fill in the reverse order of disassembly.

### ⚠ CAUTION

Water pitcher and lid are not dishwasher safe and can deform under high temperatures. Please hand wash as needed.





Untitled-1 67
2019-01-03 11:43:17

# Maintenance

## Fridge shelves

The appearance of the shelves differs by model.

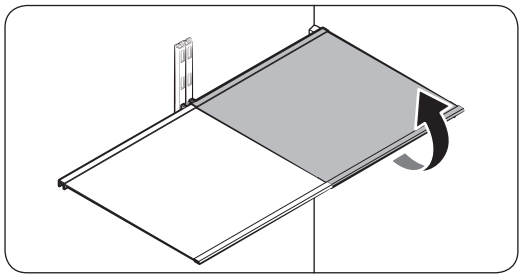

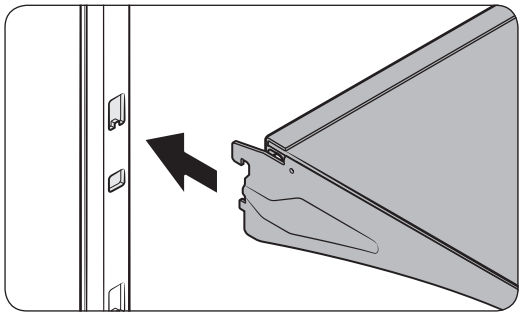

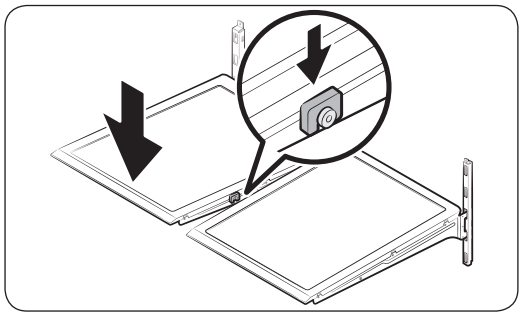

- To remove a shelf, fully open the corresponding door. Hold the front of the shelf, and then gently lift up and slide out.

**NOTE**

Do not lift up the shelf fully when removing or reinserting the shelf. The rear wall of the fridge room can be dented.

- To reinsert, hold the shelf at an angle so the front is higher than the back, and then insert the top hook into the top shelf notch. Then, lower the shelf and insert the bottom shelf hook into the bottom shelf notch.

**⚠ CAUTION**

- The tempered glass shelves are heavy. Use caution when removing them.
- The shelf must be inserted correctly. Do not insert upside down.
- Glass containers may scratch the surface of glass shelves.





Untitled-1 68 2019-01-03 11:43:17

## Foldable shelf

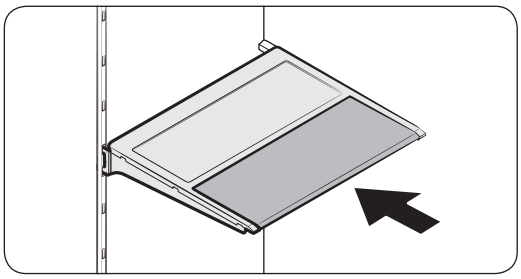

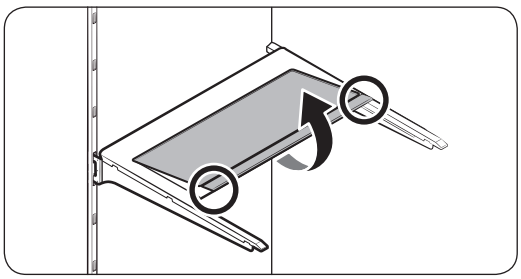

To remove, slide up the front of the shelf so that it folds. Then gently lift up and pull out. To reinsert, place the shelf on the angled frame in the main unit, and then, press down to unfold.

### ⚠ CAUTION

After sliding the foldable shelf in and folding it, the front of the shelf can be removed for your convenience. If you use the shelf without removing the front of the shelf, be aware that it can separate from the rear portion. Take when handling food items near the shelf.

## Recommended foldable shelf location

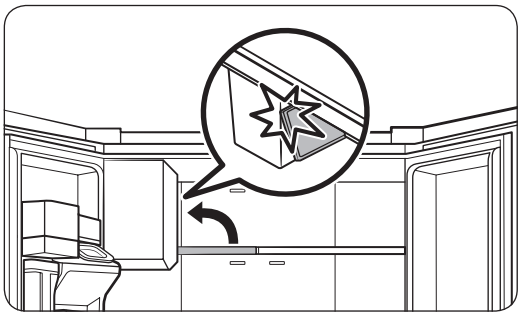

The foldable shelf folds up from the center, giving you more room for storage.

- Insert the shelf in the right side of the fridge. Left side insertion does not allow the shelf to fold completely.
- To fold, push the front area of the shelf inward so that it folds up from the middle.

### ⚠ CAUTION

Do not lift up quickly or twist the foldable shelf to take out food under it. It may fall off.





Untitled-1 69
2019-01-03 11:43:17

# Maintenance

## Vegetable shelf

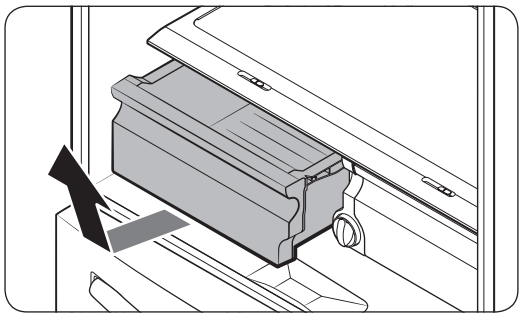

**1.** Slide out the left-side vegetable drawer.

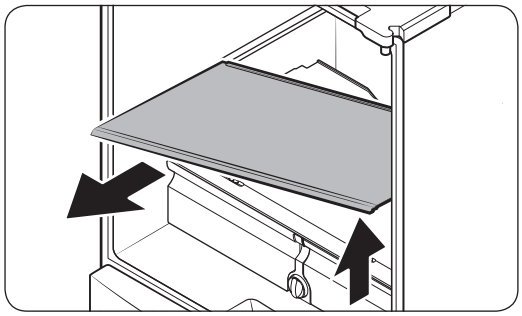

**2.** While supporting the vegetable shelf with one hand, slide it out with the other hand.

**NOTE**

To use the space that is opened up after removing the foldable shelf, take out the vegetable shelf.

To reinsert, follow the steps above in the reverse order.

## Door bins

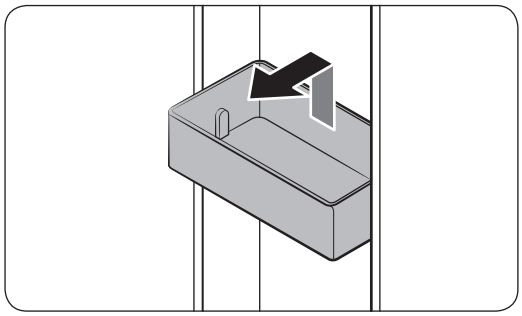

- To remove the top **door bin**, hold the front sides of the bin, and then gently lift up to remove.
- To reinsert, insert the **door bin** slightly above its final location making sure that the back of the bin is against the door. Hold the rear of the **door bin** with both hands, and then press down so that it fits snugly.





Untitled-1 70 2019-01-03 11:43:18

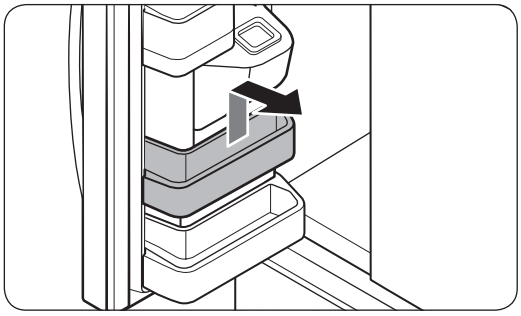

## ⚠ CAUTION

- Do not remove a bin that is filled with food. Empty the bin beforehand.
- Use caution when opening the door if the bottom bin contains larger bottles, which may fall over.
- Do not allow children to play with the bins. Sharp corners of the bin may cause injury.





Untitled-1 71
2019-01-03 11:43:18

# Maintenance

## Fridge drawers

Vegetable / fruit drawers

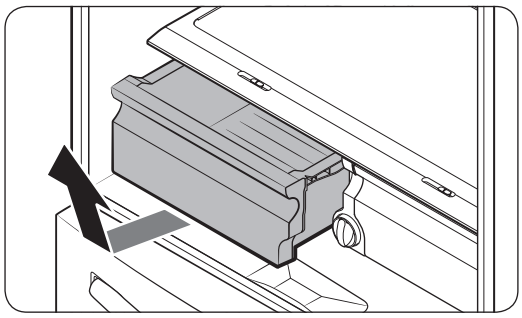

Gently lift up the front of the drawer and slide out.

- We recommend that you remove the door bins before removing the drawer. This is to prevent damage to the door bins.
- To reinsert, insert the drawer into the frame rails and then slide inward.

## FlexZone™ basket

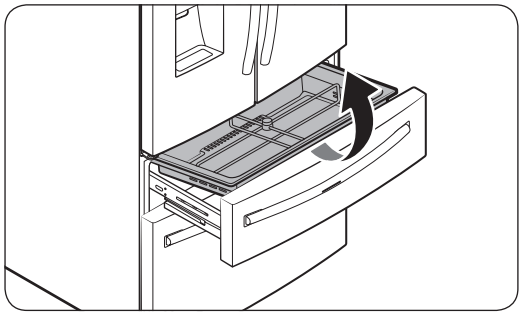

- To remove, fully open the FlexZone™ drawer. Lift up the FlexZone™ basket, and then pull out with both hands.
- To reinsert, fully open the FlexZone™ drawer. While tilting up the front of the basket, insert the rear of the basket into the rail assembly. Lower the front until the basket is in place.
- If the divider lock does not function, wipe the bars to remove moisture on them.





Untitled-1 72 2019-01-03 11:43:18

## Freezer baskets

Upper basket

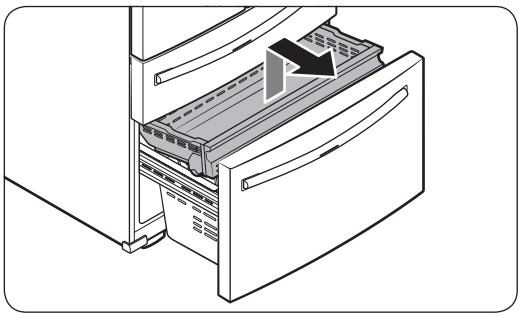

- To remove, fully slide open the freezer drawer. Push the **upper basket** to the end, and then pull up to remove.
- To reinsert, align the front wheels of the **upper basket** with the end of the **lower basket**. Slide the **upper basket** to the front.

Lower basket

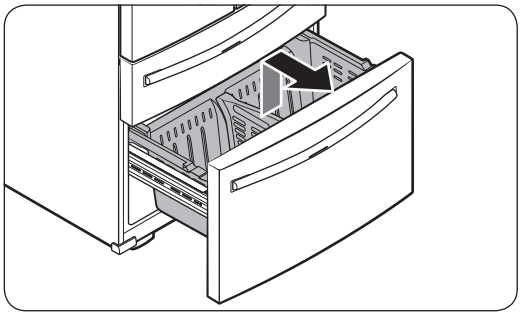

- To remove, first remove the **upper basket**. Then, tilt up the front of the **lower basket** to pull out.
- To reinsert, put the basket onto the **rail assembly** rear side first.

## ⚠ CAUTION

- Do not twist the basket when removing or reinserting the basket. The basket can be scratched.
- To prevent physical injury, property damage, or suffocation, keep children away from freezer baskets that have been removed.
- Do not remove the divider.
- Put the wheels of the upper basket on the end of the rails of the lower basket. Then, slide the upper basket all the way to the front. Otherwise, the drawer does not open or close properly, which will cause frost to build up.





Untitled-1 73 2019-01-03 11:43:19

# Maintenance

Freezer basket divider

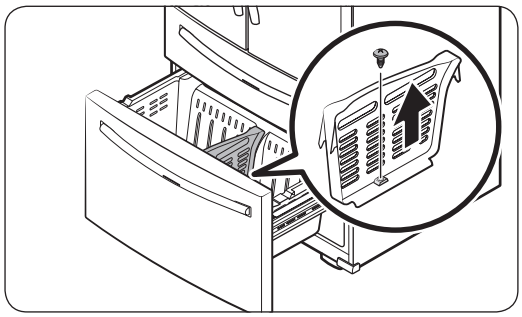

Loosen and remove the screw from the lower side of the divider. Then, pull straight up to remove the divider.





Untitled-1 74 2019-01-03 11:43:19

## Cleaning

### Interior and exterior

### ⚠ WARNING

- Do not use benzene, thinner, home/car detergent, or Clorox™ to clean the refrigerator. They may damage the surface of the refrigerator and cause a fire.
- Do not spray water onto the refrigerator. This may cause electric shock.

Regularly use a dry cloth to remove all foreign substances such as dust or water from the power plug terminals and contact points.

1. Unplug the power cord.
2. Use a moistened, soft, lint-free cloth or paper towel to clean the refrigerator's interior and exterior.
3. When done, use a dry cloth or paper towel to dry well.
4. Plug in the power cord.

### Ice / Water dispenser

### ⚠ CAUTION

When crushed ice is selected, some residual ice chips may collect in the ice chute. To prevent this, remove the residual ice from the chute using a soft, clean cloth.

### Rubber seals

If the rubber seals of a door become dirty, the door may not close properly and reducing refrigerator performance and efficiency. Use a mild detergent and damp cloth to clean the rubber seals. Then, dry well with a cloth.

### Rear panel

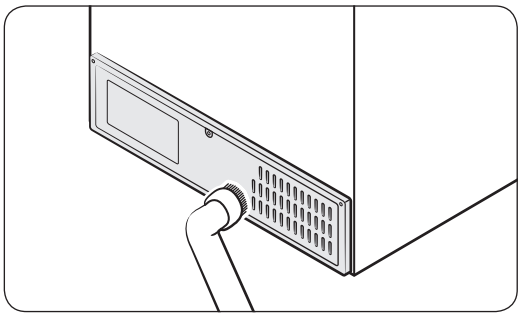

To keep cords and exposed parts of the rear panel free of dirt, vacuum the panel once or twice a year.

### ⚠ CAUTION

Do not remove the rear **panel cover**. Electric shock may occur.





Untitled-1 75 2019-01-03 11:43:19

# Maintenance

## Replacement

### Water filter

### ⚠ WARNING

- Do not use third-party water filters. Use only Samsung-provided or -approved filters.
- Unapproved filters may leak and damage the refrigerator, causing electric shock. Samsung is not responsible for any damage that may occur from use of third-party water filters.

The Filter Reset indicator ( **Filter** ) turns red to let you know it is time to replace the water filter. Before replacing the filter, make sure the water supply line is shut off.

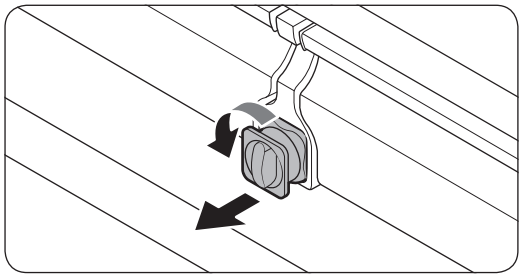

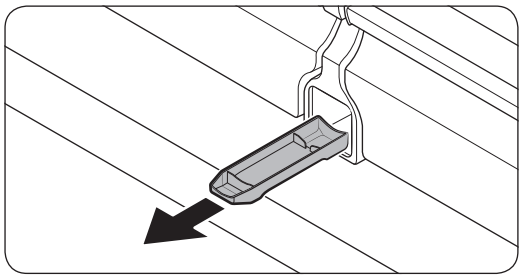

1. Shut off the water supply line.
2. Turn the knob of the filter cartridge counter clockwise 90 degrees (1/4 turn). The filter cartridge unlocks.
3. Pull out to remove the cartridge.
   - If the water filter is severely contaminated, the cartridge may not be easy to remove. If that is the case, use force to remove the cartridge.
   - To prevent water leaks from the filter opening, pull the cartridge straight out while removing it.
4. Insert a new filter cartridge. Use only Samsung-provided or approved filters.





Untitled-1 76 2019-01-03 11:43:20

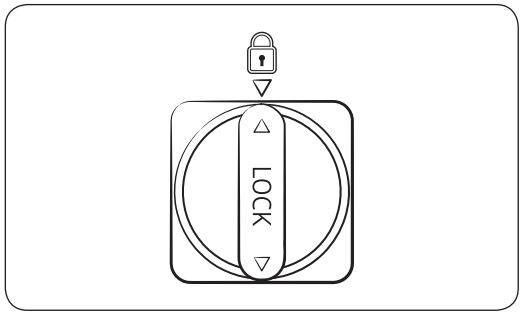


5. Turn the cartridge knob clockwise to lock into place.
6. Press and hold **Filter Reset** on the main panel for 3 seconds to reset the life cycle detector. The Filter Reset indicator (**Filter**) turns off.
7. When you are done replacing the filter, open the water valve and run water through the dispenser for about 7 minutes. This is to remove impurities and air from the water line.

**NOTE**

- A newly installed filter may cause the water dispenser to spurt water briefly. This is because air has entered the waterline.
- The replacement process may cause the water dispenser to drip for a short period of time. If it drips, simply wipe up any water on the floor with a dry towel.

### Reverse osmosis water filtration system

The water pressure of the water supply system to a reverse osmosis water filtration system must be between 35 psi and 120 psi (241 kPa and 827 kPa).

The water pressure of the reverse osmosis water filtration system to the refrigerator's cold water line must be at least 40 psi (276 kPa). If the water pressure is below these specifications:

- Check if the sediment filter in the reverse osmosis system is blocked. Replace the filter if necessary.
- Refill the water tank in the reverse osmosis system with water.
- If your refrigerator has a water filter, it may further reduce the water pressure when used in conjunction with a reverse osmosis system. Remove the water filter.

For more information or servicing, contact a licensed plumbing professional.

### Ordering a new filter

To purchase a new water filter, contact a local Samsung service center or visit www.samsungparts.com on the web.

## LED Lamps

To replace the lamps of the refrigerator, contact a local Samsung service center.

## ⚠ WARNING

- The lamps are not user-serviceable. Do not attempt to replace a lamp yourself. This can cause electric shock.





Untitled-1 77 2019-01-03 11:43:20

# Troubleshooting

Before calling for service, review the symptoms and recommended solutions below. If none of the suggested solutions resolve your problem, please visit our website at www.samsung.com or call Samsung Customer Care at 1-800-SAMSUNG (726-7864). Note that you will be charged for any service visits in which no defects were found.

## General

### Temperature

| Symptom | Possible causes | Solution |
|---|---|---|
| Fridge/freezer does not operate.<br>Fridge/freezer temperature is warm. | • Power cord is not plugged in properly. | • Properly plug in the power cord. |
| | • Temperature control is not set correctly. | • Set the temperature lower. |
| | • Refrigerator is located near a heat source or direct sunlight. | • Keep the refrigerator away from direct sunlight or a heat source. |
| | • Not enough clearance between refrigerator and nearby walls or cabinets. | • Make sure there is a gap of at least 2.5 inches (5 cm) between the refrigerator back and sides and any nearby walls or cabinets. |
| | • Energy Saver mode is activated. | • Deactivate Energy Saver mode. |
| | • The refrigerator is overloaded. Food is blocking the refrigerator vents. | • Do not overload the refrigerator. Do not allow food to block vents. |
| Fridge/freezer is over-cooling. | • Temperature control is not set correctly. | • Set the temperature higher. |





Untitled-1 78 2019-01-03 11:43:20

| Symptom | Possible causes | Solution |
|---|---|---|
| Interior wall is hot. | • Refrigerator has heat-proof piping in the interior wall. | • To prevent condensation from forming, the refrigerator has heat-proof piping in the front corners. If the ambient temperature rises, this equipment may not work effectively. This is not a system failure. 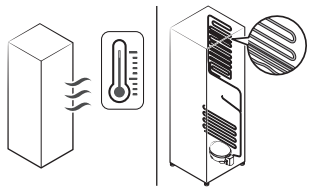 |

## Odors

| Symptom | Possible causes | Solution |
|---|---|---|
| Refrigerator has odors. | • Spoiled food. | • Clean the refrigerator and remove any spoiled food. |
| | • Food with strong odors. | • Make sure strong smelling food is wrapped airtight. |

## Frost

| Symptom | Possible causes | Solution |
|---|---|---|
| Frost around the vents. | • Food is blocking the vents. | • Make sure no food blocks the refrigerator vents. |
| Frost on interior walls. | • Door is not closed properly. | • Make sure food does not block the door. Clean the door gasket. |
| Fruits or vegetables are frozen. | • Fruits or vegetables are stored in the FlexZone™. | • Do not store most kinds of fruit or vegetables in the FlexZone™. |





Untitled-1 79 2019-01-03 11:43:20

# Troubleshooting

## Condensation

| Symptom | Possible causes | Solution |
|---|---|---|
| Condensation forms on the interior walls. | • If door is left open, moisture enters the refrigerator. | • Remove the moisture and do not leave a door open for extended periods of time. |
| | • Food with high moisture content. | • Make sure food is wrapped airtight. |

## Water/ice (dispenser models only)

| Symptom | Possible causes | Solution |
|---|---|---|
| Water flow is weaker than normal. | • Water pressure is too low. | • Make sure the water pressure is between 20 and 120 psi. |
| Ice maker makes a buzzing sound. | • The ice maker function is activated, but the water supply to the refrigerator has not been connected. | • Press **Ice Maker**. |
| Ice maker does not make ice. | • Ice maker has just been installed. | • You must wait for 12 hours for the refrigerator to make ice. |
| | • Freezer temperature is too high. | • Set the freezer temperature below 0 °F (-18 °C) or -4 °F (-20 °C) in warm ambient air. |
| | • Dispenser panel Lock is activated. | • Deactivate dispenser panel Lock. |
| | • Ice maker is off. | • Turn on the ice maker. |





Untitled-1 80 2019-01-03 11:43:20

| Symptom | Possible causes | Solution |
|---|---|---|
| Ice does not dispense. | • Ice may jam if the ice dispenser is not used for a long time (approx. 3 weeks). | • If you won't be using the refrigerator for a long time, empty the ice bucket and turn off the ice maker. |
| | • Ice bucket is not properly inserted. | • Make sure the ice bucket is properly inserted. |
| | • Water line is not connected properly or water supply is not on. | • Check if the water line is installed correctly. Check if the water line stop cock is closed. 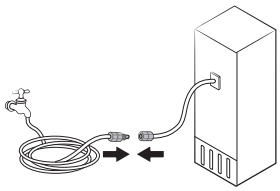 |
| Water does not dispense. | • Water line is not connected properly or water supply is not on. | • Check if the water line is installed correctly. Check if the water line stop cock is closed. 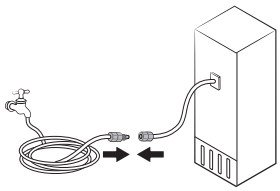 |
| | • Dispenser panel Lock is activated. | • Deactivate dispenser panel Lock. |
| | • A third-party water filter was installed. | • Use only Samsung-provided or approved filters.<br>• Unapproved filters may leak and damage the refrigerator. |
| | • Water filter indicator turns on or blinks. | • Replace the water filter. After replacing, reset the filter indicator sensor. |





Untitled-1 81 2019-01-03 11:43:20

# Troubleshooting

## Do you hear abnormal sounds from the refrigerator?

Before calling for service, review the information below. If you still have questions about sounds your refrigerator is making, please call Samsung Customer Care at 1-800-SAMSUNG (726-7864). Note that you will be charged for any service visits related to normal operating sounds in which no defects were found.

### These sounds are normal.

- When starting or ending an operation, the refrigerator may make sounds similar to a car engine ignition. As the operation stabilizes, the sounds will decrease.

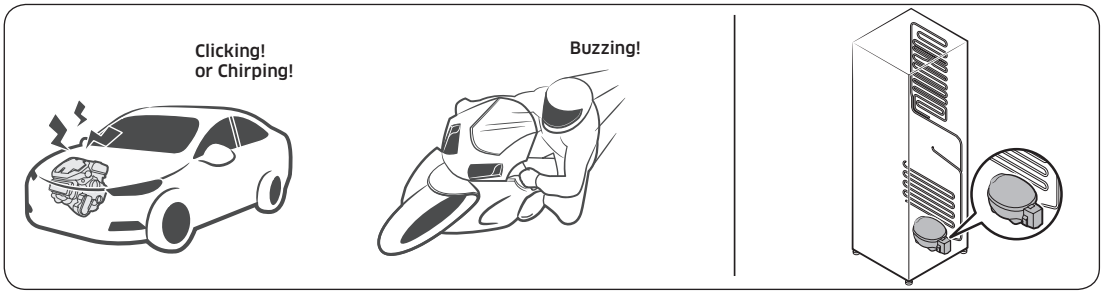


- While the fan is operating, these sounds may occur. When the refrigerator reaches the set temperature, the fan sound will stop.








Untitled-1 82
2019-01-03 11:43:21

- During a defrost cycle, water may drip on the defrost heater, causing sizzling sounds.




- As the refrigerator cools or freezes, refrigerant gas moves through sealed pipes, causing bubbling sounds.

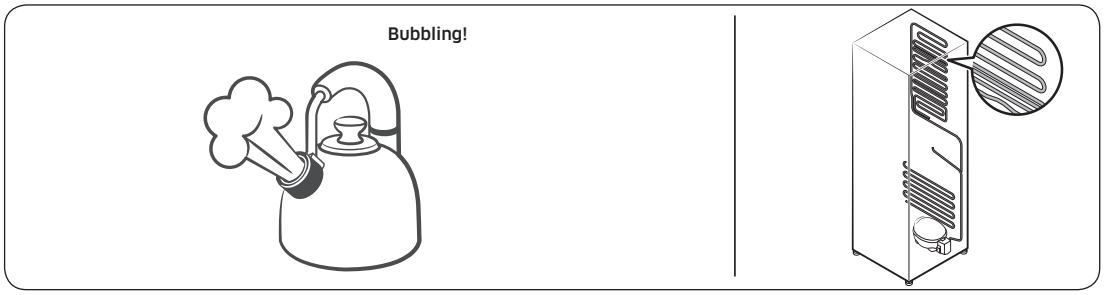


- As the refrigerator temperature increases or decreases, plastic parts contract and expand, creating knocking noises. These noises occur during the defrosting cycle or when electronic parts are working.

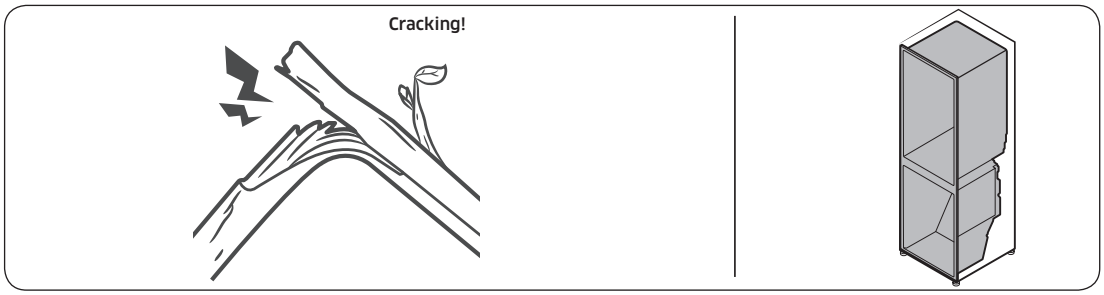


- For ice maker models: When the water valve opens to fill the ice maker, you may hear a buzzing sound.
- Due to pressure equalizing when you open and close the refrigerator door, you may hear a whooshing sound.





Untitled-1 83
2019-01-03 11:43:21

# Troubleshooting

## SmartThings

| Symptom | Action |
|---|---|
| Could not find “SmartThings” in the app market. | • The SmartThings app is designed for Android 6.0 (Marshmallow) or later, iOS 10.0 or later, iPhone 6 or later, and is optimized for Samsung smartphones (Galaxy S and Galaxy Note series). |
| The SmartThings app fails to operate. | • The SmartThings app is available for applicable models only.<br>• The old Samsung Smart Refrigerator app cannot connect with Samsung Smart Home models. |
| The SmartThings app is installed but is not connected to my refrigerator. | • You must log into your Samsung account to use the app.<br>• Make sure that your router is operating normally.<br>• If you have not connected your refrigerator to the SmartThings App after the app was installed, you must make the connection using the device registration function of the app. |
| Could not log into the app. | • You must log into your Samsung account to use the app.<br>• If you don’t have a Samsung account, follow the app’s onscreen instructions to create one. |
| An error message appears when I try to register my refrigerator. | • Easy Connection may fail due to the distance from your access point (AP) or electrical interference from the surrounding environment. Wait a moment and try again. |
| The SmartThings app is successfully connected to my refrigerator but does not run. | • Exit and restart the SmartThings app or disconnect and reconnect the router.<br>• Unplug the power cord of the refrigerator, and then plug it in again after 1 minute. |





Untitled-1 84 2019-01-03 11:43:21

# LIMITED WARRANTY (U.S.A.)

## SAMSUNG REFRIGERATOR

### LIMITED WARRANTY TO ORIGINAL CONSUMER PURCHASER WITH PROOF OF PURCHASE

This SAMSUNG brand product, as supplied and distributed by Samsung Electronics America, Inc. (SAMSUNG) and delivered new, in the original carton to the original consumer purchaser, is warranted by SAMSUNG against manufacturing defects in materials or workmanship for the limited warranty period of:

One (1) year parts and labor

Five (5) years parts and labor on Sealed Refrigeration System Only (Compressor, Evaporator, Condenser, Drier, and Connecting Tubing)

Ten (10) years part and Five (5) years labor on Digital Inverter Compressor Only

This limited warranty is valid only on products purchased and used in the United States that have been installed, operated, and maintained according to the instructions attached to or furnished with the product. To receive warranty service, the purchaser must contact SAMSUNG at the address or phone number provided below for problem determination and service procedures. Warranty service can only be performed by a SAMSUNG authorized service center. The original dated bill of sale must be presented upon request as proof of purchase to SAMSUNG or SAMSUNG's authorized service center to receive warranty service.

SAMSUNG will provide in-home service within the contiguous United States during the warranty period at no charge, subject to availability of SAMSUNG authorized servicers within the customer's geographic area. If in-home service is not available, SAMSUNG may elect, at its option, to provide transportation of the product to and from an authorized service center. If the product is located in an area where service by a SAMSUNG authorized servicer is not available, you may be responsible for a trip charge or required to bring the product to a SAMSUNG authorized service center for service.

To receive in-home service, product must be unobstructed and accessible to the service agent.

During the applicable warranty period, a product will be repaired, replaced, or the purchase price refunded, at the sole option of SAMSUNG. SAMSUNG may use new or reconditioned parts in repairing a product, or replace the product with a new or reconditioned product. Replacement parts and products are warranted for the remaining portion of the original product's warranty or ninety (90) days, whichever is longer. All replaced parts and products are the property of SAMSUNG and you must return them to SAMSUNG.



Untitled-1 85 2019-01-03 11:43:21

# LIMITED WARRANTY (U.S.A.)

This limited warranty covers manufacturing defects in materials or workmanship encountered in normal household, noncommercial use of this product and shall not cover the following: damage that occurs in shipment, delivery, installation, and uses for which this product was not intended; damage caused by unauthorized modification or alteration of the product; product where the original factory serial numbers have been removed, defaced, changed in any way, or cannot be readily determined; cosmetic damage including scratches, dents, chips, and other damage to the product's finishes; damage caused by abuse, misuse, pest infestations, accident, fire, floods, or other acts of nature or God; damage caused by use of equipment, utilities, services, parts, supplies, accessories, applications, installations, repairs, external wiring or connectors not supplied or authorized by SAMSUNG; damage caused by incorrect electrical line current, voltage, fluctuations and surges; damage caused by failure to operate and maintain the product according to instructions; in-home instruction on how to use your product; and service to correct installation not in accordance with electrical or plumbing codes or correction of household electrical or plumbing (i.e., house wiring, fuses, or water inlet hoses). The cost of repair or replacement under these excluded circumstances shall be the customer's responsibility.

Visits by an authorized servicer to explain product functions, maintenance or installation are not covered by this limited warranty. Please contact SAMSUNG at the number below for assistance with any of these issues.

## EXCLUSION OF IMPLIED WARRANTIES

IMPLIED WARRANTIES, INCLUDING THE IMPLIED WARRANTIES OF MERCHANTABILITY OR FITNESS FOR A PARTICULAR PURPOSE, ARE LIMITED TO ONE YEAR OR THE SHORTEST PERIOD ALLOWED BY LAW. Some states do not allow limitations on how long an implied warranty lasts, so the above limitations or exclusions may not apply to you. This warranty gives you specific rights, and you may also have other rights, which vary from state to state.



Untitled-1 86 2019-01-03 11:43:21

## LIMITATION OF REMEDIES

YOUR SOLE AND EXCLUSIVE REMEDY IS PRODUCT REPAIR, PRODUCT REPLACEMENT, OR REFUND OF THE PURCHASE PRICE AT SAMSUNG'S OPTION, AS PROVIDED IN THIS LIMITED WARRANTY. SAMSUNG SHALL NOT BE LIABLE FOR SPECIAL, INCIDENTAL OR CONSEQUENTIAL DAMAGES, INCLUDING BUT NOT LIMITED TO TIME AWAY FROM WORK, HOTELS AND/OR RESTAURANT MEALS, REMODELING EXPENSES, LOSS OF REVENUE OR PROFITS, FAILURE TO REALIZE SAVINGS OR OTHER BENEFITS REGARDLESS OF THE LEGAL THEORY ON WHICH THE CLAIM IS BASED, AND EVEN IF SAMSUNG HAS BEEN ADVISED OF THE POSSIBILITY OF SUCH DAMAGES. Some states do not allow exclusion or limitation of incidental or consequential damages, so the above limitations or exclusions may not apply to you. This warranty gives you specific rights, and you may also have other rights, which vary from state to state.

SAMSUNG does not warrant uninterrupted or error-free operation of the product. No warranty or guarantee given by any other person, firm, or corporation with respect to this product shall be binding on SAMSUNG.

To obtain warranty service, please contact SAMSUNG at:

Samsung Electronics America, Inc.
85 Challenger Road
Ridgefield Park, NJ 07660
1-800-SAMSUNG (726-7864)
www.samsung.com/us/support



Untitled-1 87
2019-01-03 11:43:21

# Warranty Information (CANADA)

## If your refrigerator needs service

Do not hesitate to call any Samsung Authorized Service Center nearby giving them your name, address and telephone number if your product is not functioning properly.

## Limited Warranty for Original Purchaser

This Samsung product is warranted by Samsung Electronics Canada Inc. (hereafter referred to as SECA) against manufacturing defects in material or workmanship for the following periods:

Labor : 1 year (in-home)

Parts : 1 year

Inverter Compressor : 10 years (Part only)

SECA further warrants that if this product fails to operate properly within the specified warranty period and the failure is due to improper workmanship or defective material, SECA will repair or replace the product at its option. In-home service is not available in all areas. Contact us to find out if in-home service is currently available in your area by using the contact information at the back of this warranty.

All warranty repairs or part replacements must be performed by a SECA Authorized Service Center. (To find the nearest SECA Service Center, call 1-800-SAMSUNG (7267864) or visit our web site at www.samsung.com/ca)

## Obligation to the Original Owner

The original dated sales receipt must be retained by the customer and is the only acceptable proof of purchase. It must be presented to a SECA Authorized Service Center at the time service is requested before warranty services are rendered. On all carry-in models, transportation to and from the Authorized Service Center is the responsibility of the customer.



Untitled-1 88 2019-01-03 11:43:21

## Exclusions of the Warranty

This warranty does not cover damage due to accident, fire, flood, and/or other Acts of God, misuse, incorrect line voltage, improper installation, improper or unauthorized repairs, commercial use, or damage that occurs during shipping. Customer adjustments which are explained in this owners manual are not covered under the terms of this warranty. This warranty will automatically be voided for any unit found with a missing or altered serial number. This warranty is valid only on products purchased and used in Canada.

SAMSUNG CUSTOMER CARE CENTER

Samsung Electronics Canada Inc.
2050 Derry Road West
Mississauga, Ontario L5N 0B9
Canada
1-800-SAMSUNG (726-7864)
www.samsung.com/ca/support (English)
www.samsung.com/ca_fr/support (French)



Untitled-1 89
2019-01-03 11:43:21

# Regulatory Notice

## FCC Notice

### ⚠ FCC CAUTION:

Any changes or modifications not expressly approved by the party responsible for compliance could void the user's authority to operate the equipment.

Contains Transmitter Module FCC ID: A3LCWAM210S
This device complies with Part 15 of FCC Rules. Operation is Subject to the following two conditions:
(1) This device may not cause harmful interference, and
(2) This device must accept any interference received including interference that cause undesired operation.

For products available in the US and Canadian markets, only channels 1~11 are available. You cannot select other channels.

**FCC STATEMENT:**

This equipment has been tested and found to comply within the limits for a Class B digital device, pursuant to part 15 of the FCC Rules. These limits are designed to provide reasonable protection against harmful interference in a residential installation.
This equipment generates, uses, and can radiate radio frequency energy and, if not installed and used in accordance with the instructions, may cause harmful interference to radio communications. However, there is no guarantee that interference will not occur in a particular installation. If this equipment does cause harmful interference to radio or television reception, which can be determined by turning the equipment off and on, the user is encouraged to try to correct the interference by one or more of the following measures:

- Reorient or relocate the receiving antenna
- Increase the separation between the equipment and receiver
- Connect the equipment to an outlet that is on a different circuit than the receiver.
- Consult the dealer or an experienced radio/TV technician for help.

**FCC RADIATION EXPOSURE STATEMENT:**

This equipment complies with FCC radiation exposure limits set forth for an uncontrolled environment.
This equipment should be installed and operated so there is at least 8 inches (20 cm) between the radiator and your body. This device and it's antennas must not be co-located or operated in conjunction with any other antenna or transmitter except in accordance with FCC multi-transmitter product procedures.



Untitled-1 90 2019-01-03 11:43:21

## IC Notice

Contains Transmitter Module IC: 649E-CWAM210S

The term “IC” before the radio certification number only signifies that Industry Canada technical specifications were met. Operation is subject to the following two conditions : (1) this device may not cause interference, and (2) this device must accept any interference, including interference that may cause undesired operation of the device.

This Class B digital apparatus complies with Canadian ICES-003.

Cet appareil numérique de la classe B est conforme á la norme NMB-003 du Canada.

For products available in the US and Canadian markets, only channels 1~11 are available. You cannot select other channels.

### IC RADIATION EXPOSURE STATEMENT:

This equipment complies with IC RSS-102 radiation exposure limits set forth for an uncontrolled environment. This equipment should be installed and operated so there is at least 8 inches (20 cm) between the radiator and your body. This device and it’s antennas must not be co-located or operated in conjunction with any other antenna or transmitter except in accordance with FCC multi-transmitter product procedures.

SAVE THESE INSTRUCTIONS



Untitled-1 91 2019-01-03 11:43:21

# Open Source Announcement

The software included in this product contains open source software. You may obtain the complete corresponding source code for a period of three years after the last shipment of this product by sending an email to mailto:oss.request@samsung.com.

It is also possible to obtain the complete corresponding source code in a physical medium such as a CD-ROM; a minimal charge will be required.

The following URL http://opensource.samsung.com/opensource/SMART_AT_051/seq/0 leads to the download page of the source code made available and open source license information as related to this product. This offer is valid to anyone in receipt of this information.



Untitled-1 92 2019-01-03 11:43:22

# Memo

# Memo

# Memo

SAMSUNG

Scan this with your smartphone

Scan the QR code* or visit
www.samsung.com/spsn
to view our helpful
How-to Videos and Live Shows

* Requires reader to be installed on your smartphone

## Contact SAMSUNG WORLD WIDE

If you have any questions or comments relating to Samsung products, please contact the SAMSUNG Customer Care Center.

| Country | Contact Center | Web Site |
|---|---|---|
| U.S.A | 1-800-SAMSUNG (726-7864)<br>1-844-SAM-PAYS (726-7297) | www.samsung.com/us/support |
| CANADA | 1-800-SAMSUNG (726-7864)<br>1-844-SAM-PAYS (726-7297) | www.samsung.com/ca/support (English)<br>www.samsung.com/ca_fr/support (French) |

DA68-03833A-00

Untitled-1 96 2019-01-03 11:43:22