LG
Life's Good

ENGLISH
ESPAÑOL

OWNER'S MANUAL

FRENCH DOOR REFRIGERATOR

Please read this owner's manual thoroughly before operating and keep it handy for reference at all times.

Model Name/Nombre del modelo **=color number/número de color

LFC22770**	LFC24786**	GF22BGS
LFC24770**	GF24BGS	GM-B223RSNM

P/No.: MFL67851601-6

www.lg.com

ENGLISH

TABLE OF CONTENTS

3 PRODUCT FEATURES

4 IMPORTANT SAFETY INSTRUCTIONS

7 COMPONENTS

7 Refrigerator Exterior
8 Refrigerator Interior

9 INSTALLATION

9 Installation Overview
10 Specifications
11 Unpacking Your Refrigerator
11 Choosing the Proper Location
11 - Flooring
12 - Ambient Temperature
12 - Measuring the Clearances
12 Removing/Assembling the Refrigerator Door Handles
13 Removing/Assembling the Freezer Drawer Handle
13 Removing/Assembling the Doors and Drawers
14 - Removing the Left Refrigerator Door
15 - Removing the Right Refrigerator Door
16 - Assembling the Right Refrigerator Door
17 - Assembling the Left Refrigerator Door
18 - Removing the Freezer Drawers
19 - Assembling the Freezer Drawers
20 Connecting the Water Line
20 - Before You Begin
20 - Water Pressure
20 - What You Will Need
22 - Water Line Installation Instructions
24 Turning On the Power
24 Leveling and Door Alignment
24 - Leveling
25 - Door Alignment

26 HOW TO USE

26 Before Use
27 Control Pad
27 - Control Pad Features
28 Automatic Icemaker
28 - Turning the Automatic Icemaker On or Off
29 - When You Should Turn the Icemaker Off
29 - Normal Sounds You May Hear
29 - Preparing for Vacation
30 Storing Food
30 - Food Preservation Location
31 - Food Storage Tips
31 - Storing Frozen Food
32 Humidity Controlled Crisper and Glide'N'Serve
33 Detaching and Assembling the Storage Bins
34 Adjusting the Refrigerator Shelves

35 MAINTENANCE

35 Cleaning

36 SMART DIAGNOSIS™

36 Using Smart Diagnosis ™

37 TROUBLESHOOTING

44 WARRANTY

PRODUCT FEATURES

* Depending on the model, some of the following functions may not be available.

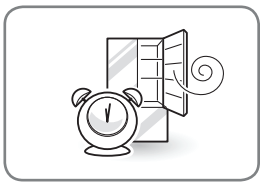

DOOR ALARM

The Door Alarm function is designed to prevent refrigerator malfunctioning that could occur if a refrigerator door or freezer drawer remains open. If a refrigerator door or freezer drawer is left open for more than 60 seconds, a warning alarm sounds at 30 second intervals.

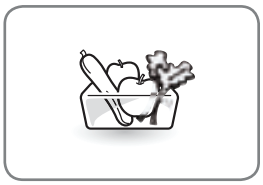

HUMIDITY CONTROLLED CRISPERS

The Humidity Controlled Crispers are designed to help keep your fruits and vegetables fresh and crisp. You can control the amount of humidity in the crispers by adjusting the settings between Low and High.

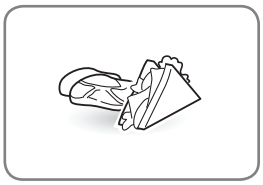

GLIDE'N'SERVE

Glide'N'Serve provides storage space with a variable temperature control that keeps the compartment colder than the refrigerator. It is a convenient place to store sandwiches or meat to be cooked.



AUTO CLOSING HINGE

The refrigerator doors and freezer drawers close automatically with a slight push. (The door only closes automatically when it is open at an angle less than 30°.)

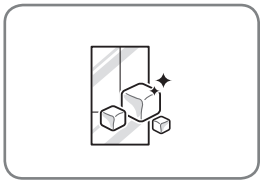

ICE PLUS

Ice production can be increased by approximately 20 percent when the freezer section is maintained at the coldest temperature for a 24-hour period.

IMPORTANT SAFETY INSTRUCTIONS

READ ALL INSTRUCTIONS BEFORE USING THE APPLIANCE.

This guide contains many important safety messages. Always read and obey all safety messages.



This is the safety alert symbol. It alerts you to safety messages that inform you of hazards that can kill or hurt you or others, or cause damage to the product.

All safety messages will be preceded by the safety alert symbol and the hazard signal word WARNING or CAUTION. These words mean:



WARNING You can be killed or seriously injured if you do not follow instructions.



CAUTION Indicates an imminently hazardous situation which, if not avoided, may result in minor or moderate injury, or product damage.



WARNING

To reduce the risk of fire, electric shock, or personal injury when using your product, basic safety precautions should be followed, including the following:

Power

- NEVER unplug your refrigerator by pulling on the power cord. Always grip the plug firmly and pull it straight out from the outlet.
- If the supply cord is damaged, it must be replaced by the manufacturer or its service agent or a similarly qualified person in order to avoid a safety hazard. Do not use a cord that shows cracks or abrasion damage along its length or at either the plug or connector end.
- Do not use an uncertified power outlet.
- Unplug the power plug immediately in the event of a blackout or thunderstorm.
- Plug in the power plug with the power cord facing downward.
- Do not use extension cords and adapters ungrounded.

Installation

- Contact an authorized service center when you install or relocate the refrigerator.
- When moving your refrigerator away from the wall, be careful not to roll over or damage the power cord.
- Prior to use, ensure that you are connecting this product to a dedicated grounded electrical outlet rated for use with this product (115/127V~ 60Hz, AC only). It is the user's responsibility to replace a standard 2-prong wall outlet with a standard 3-prong wall outlet.
- Do not install the refrigerator where there may be a danger of the unit falling.

Use

- DO NOT allow children to climb, stand, or hang on the refrigerator doors or on the shelves in the refrigerator. They could damage the refrigerator and seriously injure themselves.
- Do not hang on to or place heavy objects on the refrigerator's dispenser.
- Do not place heavy or dangerous objects (bottles with liquid) on the refrigerator.
- Do not put live animals inside the refrigerator.
- Do not allow children to climb into the product when it is in use.
- In the event of a gas leak (propane/LPG), ensure adequate ventilation and contact an authorized service center before resuming use. Do not touch or disassemble the electrical outlet of the refrigerator.
- In the event of a refrigerant leak, move flammable objects away from the refrigerator. Ensure adequate ventilation and contact an authorized service center.
- Do not use or place flammable substances (chemicals, medicine, cosmetics, etc) near the refrigerator or store them inside the refrigerator. Do not place the refrigerator in the vicinity of flammable gas.

READ ALL INSTRUCTIONS BEFORE USING THE APPLIANCE.

To reduce the risk of fire, electric shock, or personal injury when using your product, basic safety precautions should be followed, including the following:

- This product is not to be used for special purposes such as the storage of medicine or test materials or for use on ships, etc.
- Unplug the power plug before cleaning or repairing the refrigerator.
- When you replace the light bulb in the refrigerator, unplug the refrigerator or turn off the power.
- Do not modify or extend the power cord.
- Do not use a dryer to dry the interior. Do not light a candle to remove interior odors.
- For your safety, this appliance must be properly grounded. Have the wall outlet and the circuit checked by a qualified electrician to make sure the outlet is properly grounded.
- Do not use an outlet that can be turned off with a switch. Do not use an extension cord. It is the user's responsibility to replace a standard 2-prong wall outlet with a standard 3-prong wall outlet.
- Do not, under any circumstances, cut or remove the third (ground) prong from the power cord.
- Do not use an adapter plug and plug the power plug into a multi-outlet extension cord.
- Disconnect the power cord immediately if you hear a noise, smell a strange odor or detect smoke coming from the appliance.
- Turn the power off if water or dust penetrates into the refrigerator. Call a service agent.
- Do not disassemble or modify the refrigerator.
- Do not put hands, feet, or metal objects below or behind the refrigerator.
- Do not operate the refrigerator or touch the power cord with wet hands.
- In refrigerators with automatic icemakers, avoid contact with the moving parts of the ejector mechanism or with the heating element that releases the cubes. Do not place fingers or hands on the automatic ice-making mechanism while the refrigerator is plugged in.
- When dispensing ice from the dispenser, do not use crystal ceramics.
- Do not touch the cold surfaces in the freezer compartment with wet or damp hands, when your refrigerator is in operation.
- Do not put glass containers, glass bottles or soda in the freezer.
- This appliance is not intended for use by persons (including children) with reduced physical, sensory or mental capabilities, or lack of experience and knowledge, unless they have been given supervision or instruction concerning the use of the appliance by a person responsible for their safety. Children should be supervised to assure that they do not play with the appliance.
- Do not refreeze frozen food that has thawed completely. Doing so may result in a serious health issue.
- If you are throwing away your old refrigerator, make sure the CFC or HCFC coolant is removed for proper disposal by a qualified servicer. If you release CFC/HCFC coolant, you may be fined or imprisoned in accordance with the relevant environmental law.
- Junked or abandoned refrigerators are dangerous, even if they are sitting for only a few days. When disposing of the refrigerator, remove the packing materials from the door or take off the doors but leave the shelves in place so that children may not easily climb inside.
- If the refrigerator is connected to a circuit protected by fuses, use time delay fuses.
- If the use of this unit is no longer needed, please contact local authorities to dispose of this product in a safe way due contains Pentane-cycle or pentane like gas for insulation. Insulation gases require a special elimination process. This product contains flammable.

READ ALL INSTRUCTIONS BEFORE USING THE APPLIANCE.

To reduce the risk of fire, electric shock, or personal injury when using your product, basic safety precautions should be followed, including the following:

CAUTION

Installation

- The refrigerator must be properly installed in accordance with the Installer Instructions that were taped to the front of the refrigerator.
- Be careful when you unpack and install the refrigerator. Immediately dispose of plastic and other packing materials out of the reach of children.
- The appliance must be positioned for easy access to a power source.

Use

- Close the door carefully when children are around.
- Keep fingers out of pinch point areas; clearances between the doors and cabinets are necessarily small. Be careful closing doors when children are nearby.
- If you store food improperly, be aware that it may fall and cause injury.
- Do not use aerosols near the refrigerator.
- Do not store articles on the top of the appliance.

Maintenance

- Do not use strong detergents like wax or thinners for cleaning. Clean with a soft cloth.
- Wipe foreign objects (such as dust and water) off the prongs of the power plug and contact areas regularly.
- Do not store, disassemble or repair the refrigerator by yourself.
- Remove any dust or foreign matter from the power plug pins.
- Do not use a wet or damp cloth when cleaning the plug.
- If the refrigerator is disconnected from the power supply, wait for at least five minutes before plugging it back in.
- If you notice a chemical or burning plastic smell or see smoke, unplug the refrigerator immediately and contact your LG Electronics Service Center.

⚠ WARNING: This product contains chemicals known to the State of California to cause cancer and birth defects or other reproductive harm. Wash hands after handling.

WARNING

DO NOT USE MECHANICAL DEVICES
Do not use mechanical devices or other means to accelerate the defrosting process, only those recommended by the manufacturer.

WARNING

DO NOT STORE ELECTRICAL APPLIANCES, do not use electrical appliances inside the food storage compartment, unless they are recommended by the manufacturer.

SAVE THESE INSTRUCTIONS

COMPONENTS

Use this page to become more familiar with the parts and features of your refrigerator. Page references are included for your convenience.

*The appearance and specifications of the actual product may differ depending on the model.

Refrigerator Exterior

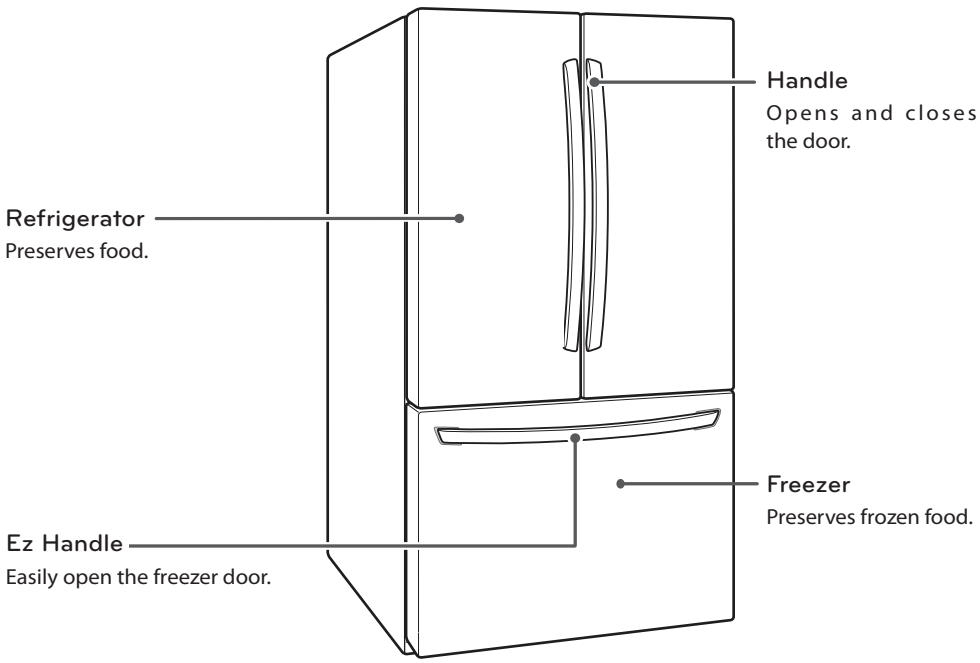

Refrigerator Interior

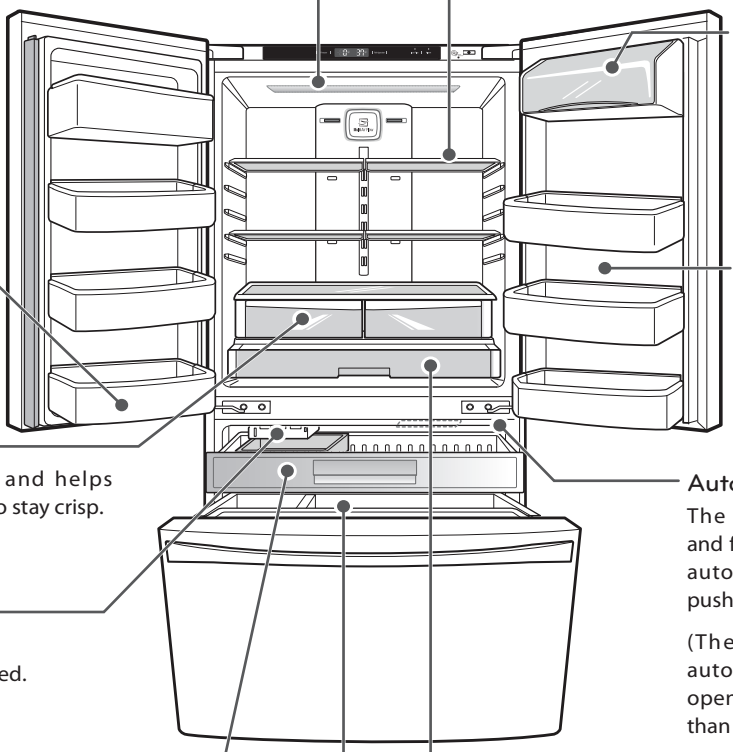

LED interior lamps
The interior lamps light up the inside of the refrigerator.

Adjustable Refrigerator Shelf
The shelves in your refrigerator are adjustable to meet your individual storage needs.

Dairy Product Bin
Used to preserve dairy products.

Fixed Door Bin
Used to preserve chilled food or drinks.

Modular Door Bins
Interchangeable bins can be arranged to suit your storage needs.

Crisper
Controls humidity and helps vegetables and fruit to stay crisp.

Auto Closing Hinge
The refrigerator doors and freezer drawers close automatically when you push them slightly.

(The door only closes automatically when it is open at an angle of less than 30°.)

Ice Bin
Ice cubes are automatically produced.

Pullout Drawer
Used for extra storage within the freezer compartment.

Glide'N'Serve
Used for large party trays, deli items and beverages.

Durabase® and Durabase® Divider
The Durabase is a storage space recommended for the preservation of large food items. The Durabase Divider is used to organize the Durabase area into sections. It can be adjusted from side to side to accommodate items of different sizes.

INSTALLATION

Installation Overview

Please read the following installation instructions first after purchasing this product or transporting it to another location.

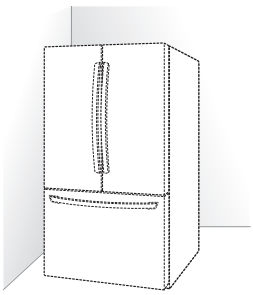

1 Unpacking your refrigerator

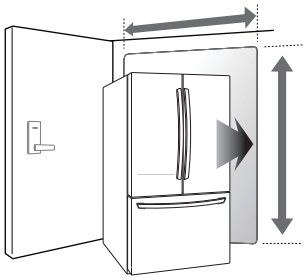

2 Choosing the proper location

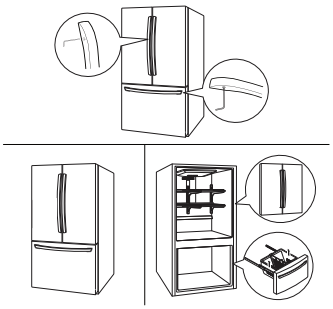

3 Disassembling/Assembling

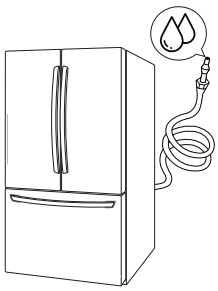

4 Connecting the water supply and water line

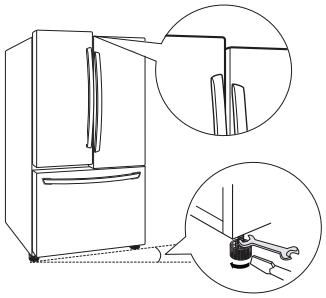

5 Leveling and Door Alignment

"This appliance is intended to be used in household and similar applications such as:
-Staff kitchen areas in shops, offices and other working environments; farms houses and by clients in hotel, motels and others residential type environments.
-Bed and breakfast type environments; catering and similar non-reatil applications."

Specifications

The appearance and specifications listed in this manual may vary due to constant product improvements.

Dimensions	Width 32 3/4 in. (833 mm)	32 3/4" (W) X 35 1/2" (D) X 69 7/8" (H), 46" (D w/ door open) 833 mm (W) X 901 mm (D) X 1775.5 mm (H), 1168.5 mm (D w/ door open)
	Width 29 3/4 in. (756 mm)	29 3/4" (W) X 35 1/2" (D) X 68 1/2" (H), 44 3/4" (D w/ door open) 756 mm (W) X 901 mm (D) X 1740 mm (H), 1137 mm (D w/ door open)
Net weight	Width 32 3/4 in. (833 mm)	253 lb. (115 kg)
	Width 29 3/4 in. (756 mm)	237.4 lb. (107.9 kg)

Unpacking Your Refrigerator

WARNING

- Use two or more people to move and install the refrigerator. Failure to do so can result in back or other injury.
- Your refrigerator is heavy. When moving the refrigerator for cleaning or service, be sure to protect the floor. Always pull the refrigerator straight out when moving it. Do not wiggle or walk the refrigerator when trying to move it, as floor damage could occur.
- Keep flammable materials and vapors, such as gasoline, away from the refrigerator. Failure to do so can result in fire, explosion, or death.

Remove tape and any temporary labels from your refrigerator before using. Do not remove any warning-type labels, the model and serial number label, or the Tech Sheet that is located under the front of the refrigerator.

To remove any remaining tape or glue, rub the area briskly with your thumb. Tape or glue residue can also be easily removed by rubbing a small amount of liquid dish soap over the adhesive with your fingers. Wipe with warm water and dry.

Do not use sharp instruments, rubbing alcohol, flammable fluids, or abrasive cleaners to remove tape or glue. These products can damage the surface of your refrigerator.

Refrigerator shelves are installed in the shipping position. Please reinstall shelves according to your individual storage needs.

Choosing the Proper Location

- Select a place where a water supply can be easily connected for the automatic icemaker.

NOTE

The water pressure must be between 20 and 120 psi (0,14 - 0,82 MPa) on models without a water filter and between 40 and 120 psi (0,28 - 0,82 MPa) on models with a water filter.

- The refrigerator should al ways be plugged into its own individual properly grounded electrical outlet rated for 115/127 V~ 60 Hz, AC only, and fused at 15 or 20 A.
  This provides the best performance and also prevents overloading house wiring circuits which could cause a fire hazard from overheated wires. It is recommended that a separate circuit serving only this appliance be provided.

WARNING

To reduce the risk of electric shock, do not install the refrigerator in a wet or damp area.

Flooring

To avoid noise and vibration, the unit must be leveled and installed on a solidly constructed floor. If required, adjust the leveling legs to compensate for unevenness of the floor. The front should be slightly higher than the rear to aid in door closing. Leveling legs can be turned easily by tipping the cabinet slightly. Turn the leveling legs to the left to raise the unit or to the right to lower it. (See Leveling and Door Alignment.)

NOTE

Installing on carpeting, soft tile surfaces, a platform or weakly supported structure is not recommended.

Ambient Temperature

Install this appliance in an area where the temperature is between 55°F (13°C) and 110°F (43°C). If the temperature around the appliance is too low or high, cooling ability may be adversely affected.

Measuring the Clearances

Too small of a distance from adjacent items may result in lowered freezing capability and increased electricity consumption charges. Allow at least 24 inches (61 cm) in front of the refrigerator to open the doors, and at least 2 inches (5.08 cm) between the back of the refrigerator and the wall.

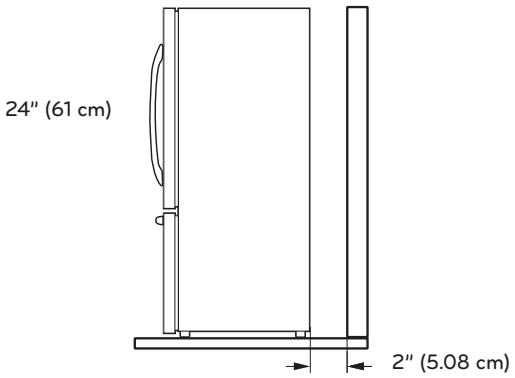

Removing/Assembling the Refrigerator Door Handles

NOTE

When it is necessary to move the refrigerator through a narrow opening, removing the doors is the recommended procedure. If it is necessary to remove the handles, follow the directions below. The appearance of the handle may vary from what is shown in the illustrations

Removing the Handles

1 Loosen the set screws 1 with a 3/32 in. (2.5 mm) Allen wrench and remove the handle.

2 Loosen the mounting fasteners 2 that connect to the refrigerator door and handle using a ¼ in.(6.35 mm) Allen wrench, remove the mounting fasteners.

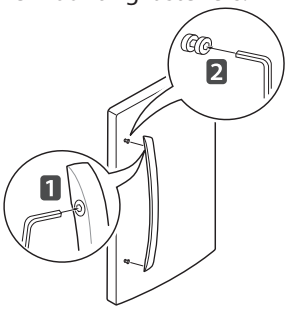

Assembling the Handles

1 Assemble the mounting fasteners 1 at both ends of the handle using a ¼ in. (6.35 mm) Allen wrench.

2 Place the handle on the door by fitting the handle footprints over the mounting fasteners and tightening the set screws 2 with a 3/32 in. (2.5 mm) Allen wrench.

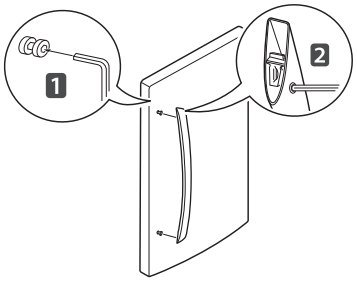

Removing/Assembling the Freezer Drawer Handle

Removing the Handle

1 Loosen the set screws 1 located on the lower side of the handle with a 3/32 in. (2.5mm) Allen wrench and remove the handle.

2 Loosen the mounting fasteners 2 that connect to the freezer drawer and handle using a $^1/_4$ in. (6.35 mm) Allen wrench, and remove the mounting fasteners.

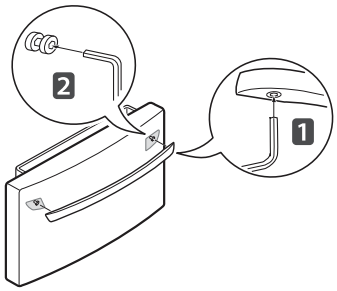

Assembling the Handle

1 Assemble the mounting fasteners 1 at both ends of the handle using a $^1/_4$ in. Allen (6.35 mm) wrench.

2 Place the handle on the door by fitting the handle footprints over the mounting fasteners and tightening the set screws 2 with a 3/32 in. (2.5 mm) Allen wrench.

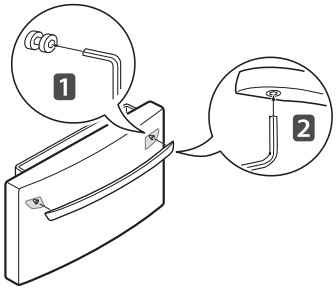

WARNING

When assembling or disassembling the handle:

- Grasp the handle tightly to avoid dropping it.
- Do not swing the handle into nearby people or animals.
- Make sure that the bracket hole of the handle fits properly into the stopper bolt of the door. Assemble the set screws to fix the handle into place.
- Make sure that there is not a gap between the door and handle after assembling the handle.

Removing/Assembling the Doors and Drawers

When it is necessary to move the refrigerator through a narrow opening, removing the doors is the recommended procedure.

WARNING

- If your entrance door is too narrow for the refrigerator to pass through, remove the refrigerator doors and move the refrigerator side ways through the doorway.
- Use two or more people to remove and install the refrigerator doors. Failure to do so can result in back or other injury.
- Disconnect the electrical supply to the refrigerator before installation. Failure to do so could result in serious injury or death.
- Do not put hands, feet or other objects into the air vents or bottom of the refrigerator. You may be injured or receive an electrical shock.
- Be careful when handling the hinge and stopper. You may be injured.
- Remove food and bins before detaching the doors and drawers.

Removing the Left Refrigerator Door

1 Remove the top hinge cover screws 1. Lift the hook (not visible), located at the bottom of the front side of the cover 2. with a flat-head screwdriver.

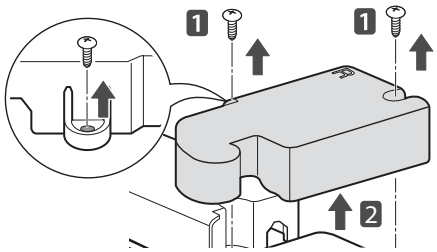

2 Disconnect the wire harness 3.

3 Remove the grounding screw 4.

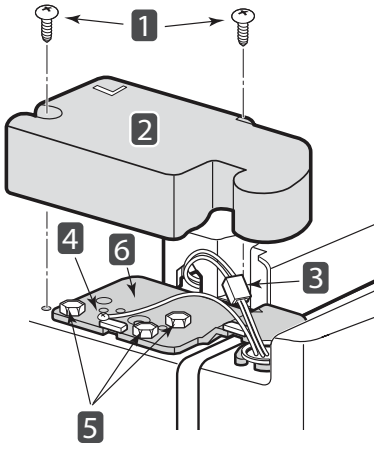

4 Remove the three bolts using a 10mm or 13/32-inch socket wrench and lift off the top hinge. Set parts aside.

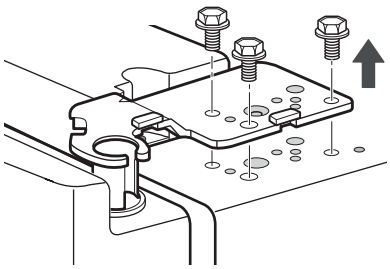

CAUTION

When lifting the hinge, be careful that the door does not fall forward.

5 Lift the door from the middle hinge pin and remove the door.

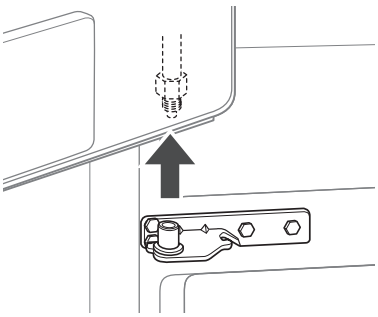

CAUTION

Place the door, inside facing up, on a non-scratching surface.

Removing the Right Refrigerator Door

1 Remove the top hinge cover screws 1. Lift the hook (not visible), located at the bottom of the front side of the cover 2. with a flat-head screwdriver.

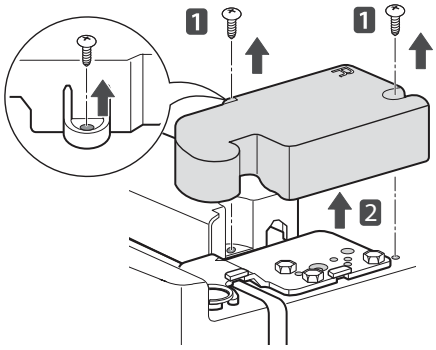

2 Remove the three bolts using a 10mm or 13/32-inch socket wrench and lift off the top hinge. Set parts aside.

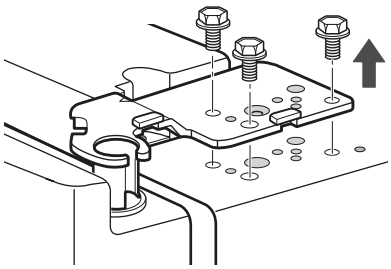

CAUTION

When lifting the hinge, be careful that the door does not fall forward.

3 Lift the door from the middle hinge pin and remove the door.

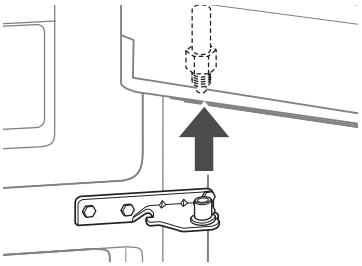

CAUTION

Place the door, inside facing up, on a non-scratching surface.

Assembling the Right Refrigerator Door

Install the right-side door first.

1 Make sure that the plastic sleeve is inserted in the bottom of the door. Lower the door onto the middle hinge pin as shown in the figure.

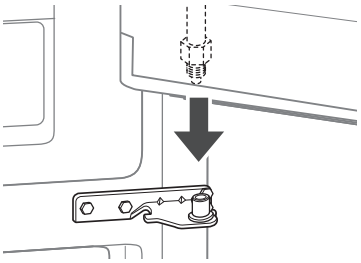

2 Align the door with the cabinet

3 Line up the holes in the top hinge with the holes in the top of the refrigerator. Insert and tighten the three bolts in the hinge.

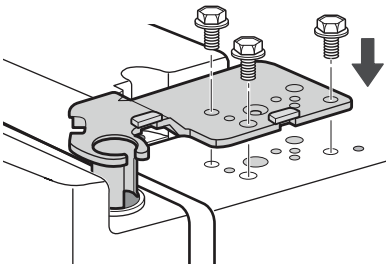

4 Replace the hinge cover 1. Insert and tighten the cover screws 2.

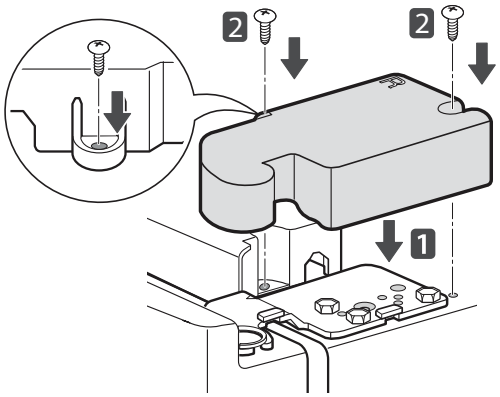

Assembling the Left Refrigerator Door

Install the left refrigerator door after the right door is installed.

1 Make sure that the plastic sleeve is inserted in the bottom of the door. Install the refrigerator door onto the middle hinge.

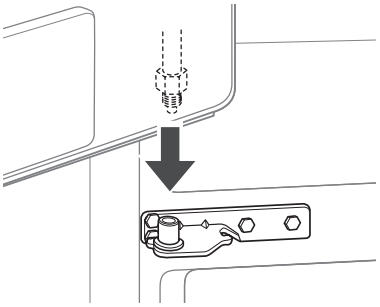

2 Align the door with the cabinet

3 Line up the holes in the top hinge with the holes in the top of the refrigerator. Insert and tighten the three bolts in the hinge.

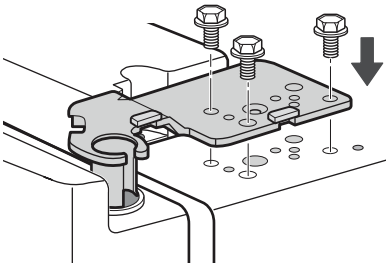

4 Replace the grounding screw 3.

5 Reconnect the wire harness 4.

6 Replace the hinge cover 5. Insert and tighten the cover screws 6.

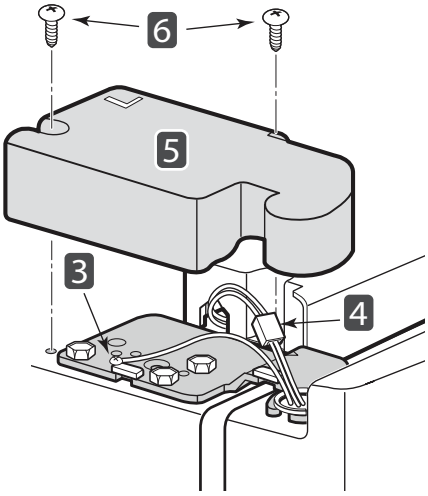

Removing the Freezer Drawers

The top, middle and bottom drawers are all removed in the same way. In the following figures, the Pullout Drawer located above the freezer drawer is not shown for clarity.

CAUTION

- Use two or more people to remove and install the freezer drawer. Failure to do so can result in back or other injury.
- Do not hold the handle when removing or replacing the drawer. The handle may come off, causing personal injury.
- Be careful of sharp hinges on both sides of the drawer.
- When you lay the drawer down, be careful not to damage the floor.
- Do not sit or stand on the freezer drawer.
- To prevent accidents, keep children and pets away from the drawer. Do not leave the drawer open.

1 Pull the drawer open to full extension.

2 Lift the DuraBase basket up and out, making sure to clear the rail system.

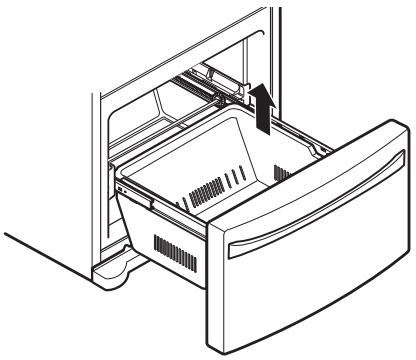

3 Remove the screws at the ends of both rails

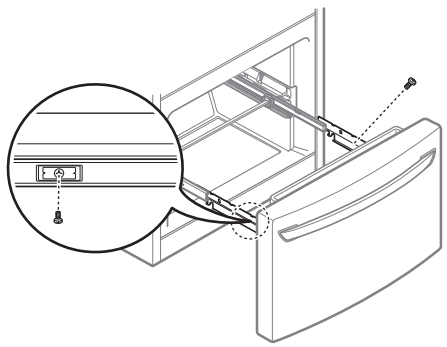

4 Slide out the bar.

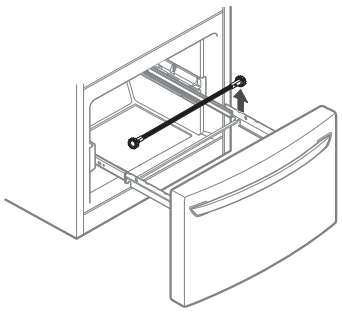

CAUTION

Do not hold the handle when removing or replacing the drawer. The handle may come off and it could cause personal injury.

5 Grip both sides of the drawer and pull it up to remove it from the rails.

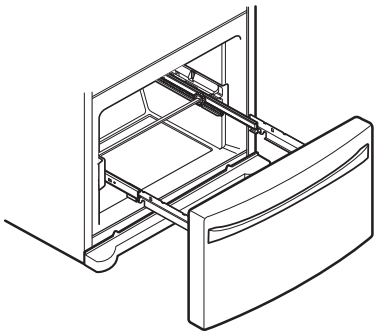

6 Holding one rail with each hand, push the rails in simultaneously.

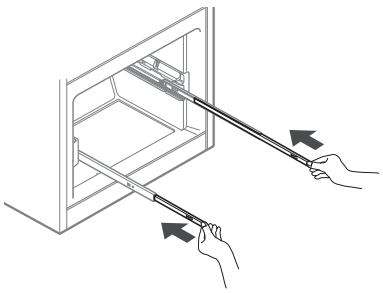

Assembling the Freezer Drawers

The top, middle and bottom drawers are all assembled in the same way.

1 Using two hands, pull out both rails simultaneously until they are fully extended.

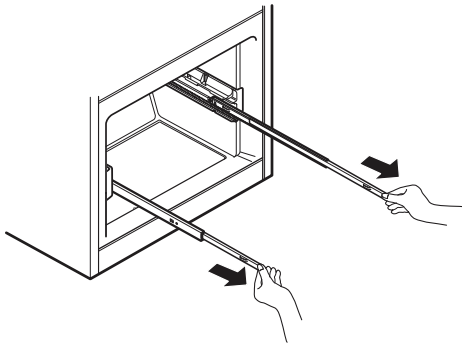

2 Grasp the drawer on each side and hook the drawer supports into the rail tabs located on both sides.

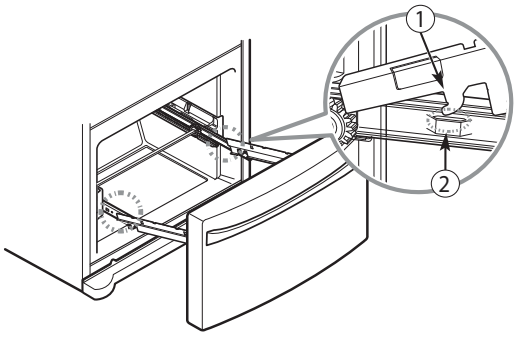

CAUTION

Do not hold the handle when removing or replacing the drawer. The handle may come off and it could cause personal injury.

3 Reinstall the bar in the drawer supports.

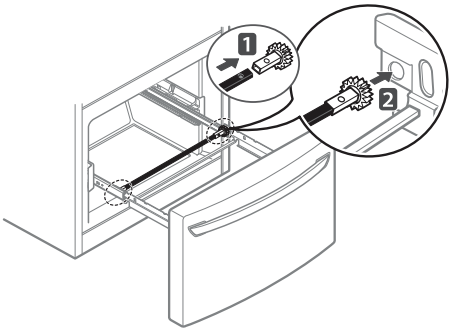

4 Lower the door into its final position and tighten the screws located on both sides.

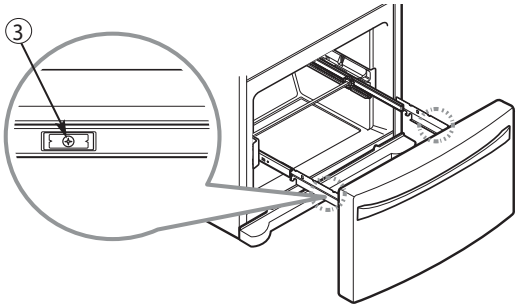

5 With the drawer pulled out to full extension, insert the lower basket in the rail assembly.

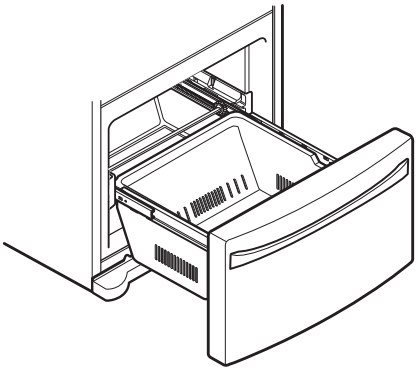

Connecting the Water Line

Before You Begin

This water line installation is not covered by the refrigerator warranty. Follow these instructions carefully to minimize the risk of expensive water damage.

Water hammer (water banging in the pipes) in house plumbing can cause damage to refrigerator parts and can lead to water leakage or flooding. Call a qualified plumber to correct water hammer before installing the water supply line to the refrigerator.

CAUTION

To prevent burns and product damage, only connect the refrigerator water line to a cold water supply.

If you use your refrigerator before connecting the water line, make sure the icemaker power switch is in the OFF (O) position.

CAUTION

Do not install the icemaker tubing in areas where temperatures fall below freezing.

Water Pressure

You will need a cold water supply. The water pressure must be between 20 and 120 psi (0.14 y 0.82 MPa) on models without a water filter and between 40 and 120 psi (0.28 y 0.82 MPa) on models with a water filter.

If a reverse osmosis water filtration system is connected to your cold water supply, this water line installation is not covered by the refrigerator warranty. Follow the following instructions carefully to minimize the risk of expensive water damage.

If a reverse osmosis water filtration system is connected to your cold water supply, the water pressure to the reverse osmosis system needs to be a minimum of 40 to 60 psi (0,28 y 0,41 MPa) less than 2.0~3.0 sec. to fill a cup of 7 oz (0.2 L) capacity

CAUTION

Wear eye protection during installation to prevent injury.

If the water pressure from the reverse osmosis system is less than 21 psi or 0,14 MPa takes more than 4.0 sec to fill a cup of 7 oz (0,2 L) capacity:

- Check to see if the sediment filter in the reverse osmosis system is blocked. Replace the filter if necessary.
- Allow the storage tank on the reverse osmosis system to refill after heavy usage.
- If the issue concerning water pressure from reverse osmosis remains, call a licensed, qualified plumber.
- All installations must be in accordance with local plumbing code requirements.

What You Will Need

- **Copper Tubing,** ¼ in. (6.35 mm) outer diameter, to connect the refrigerator to the water supply. Be sure both ends of the tubing are cut square.
  To determine how much tubing you need: measure the distance from the water valve on the back of the refrigerator to the water supply pipe. Then, add 8 feet (2.4 m).
  Be sure there is sufficient extra tubing (about 8 feet [2.4 m] coiled into three turns of about 10 in. [25 cm] diameter) to allow the refrigerator to move out from the wall after installation.

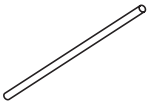

- **Power drill.**
- **½ in. (13 mm) or adjustable wrench.**
- **Flat blade and Phillips head screwdrivers.**

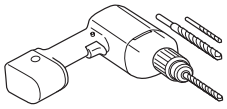

- **Two ¼ in. (6.35 mm) outer diameter compression nuts and 2 ferrules (sleeves)** to connect the copper tubing to the shutoff valve and the refrigerator water valve.

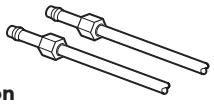

- If your existing copper water line has a flared fitting at the end, you will need an **adapter** (available at plumbing supply stores) to connect the water line to the refrigerator OR you can cut off the flared fitting with a tube cutter and then use a compression fitting.

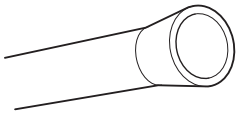

- **Shutoff valve to connect to the cold water line.** The shutoff valve should have a water inlet with a minimum inside diameter of 5/32 in. (4 mm) at the point of connection to the COLD WATER LINE. Saddle-type shutoff valves are included in many water supply kits. Before purchasing, make sure a saddle-type valve complies with your local plumbing codes.

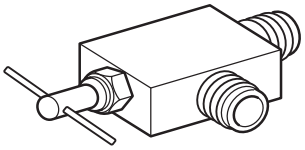

NOTE

A self-piercing saddle type water valve should not be used.

Water Line Installation Instructions

WARNING

- When using any electrical device (such as a power drill) during installation, be sure the device is battery powered, double insulated or grounded in a manner that will prevent the hazard of electric shock.

Install the shutoff valve on the nearest frequently used drinking water line.

1 SHUT OFF THE MAIN WATER SUPPOLE

Turn on the nearest faucet to relieve the pressure on the line.

2 CHOOSE THE VALVE LOCATION

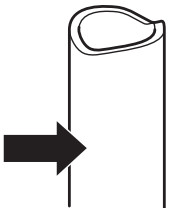

Choose a location for the valve that is easily accessible. It is best to connect into the side of a vertical water pipe. When it is necessary to connect into a horizontal water pipe, make the connection to the top or side, rather than at the bottom, to avoid drawing off any sediment from the water pipe.

3 DRILL THE HOLE FOR THE VALVE.

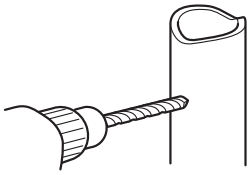

Drill a 1/4 in. (6.35 mm) hole in the water pipe using a sharp bit. Remove any burrs resulting from drilling the hole in the pipe. Be careful not to allow water to drain into the drill. Failure to drill a ¼ in. hole may result in reduced ice production or smaller cubes.

NOTE

The hookup line cannot be white, plastic tubing. Licensed plumbers must use only copper tubing (NDA tubing #49595 or #49599) or Cross Link Polyethylene (PEX) tubing.

4 FASTEN THE SHUTOFF VALVE

Fasten the shutoff valve to the cold water pipe with the pipe clamp.

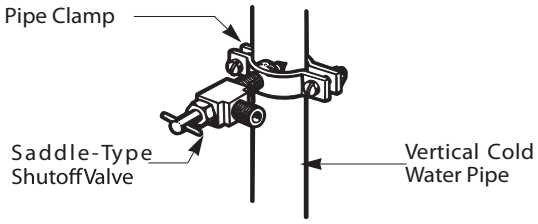

NOTE

Commonwealth of Massachusetts Plumbing Codes 248CMR shall be adhered to. Saddle valves are illegal and use is not permitted in Massachusetts. Consult with your licensed plumber by norms and regulations of your country.

5 TIGHTEN THE PIPE CLAMP

Tighten the clamp screws until the sealing washer begins to swell.

NOTE: Do not overtighten clamp or you may crush the tubing.

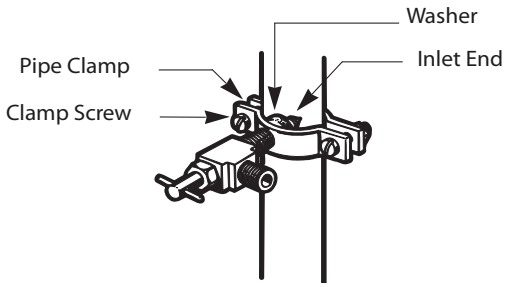

6 ROUTE THE TUBING.

Route the tubing between the cold water line and the refrigerator.

Route the tubing through a hole drilled in the wall or floor (behind the refrigerator or adjacent base cabinet) as close to the wall as possible.

NOTE

Be sure there is sufficient extra tubing (about 8 feet [2.4 m] coiled into 3 turns of about 10 in. [254 mm] diameter) to allow the refrigerator to move out from the wall after installation.

7 CONNECT THE TUBING TO THE VALVLE

Place the compression nut and ferrule (sleeve) for copper tubing onto the end of the tubing and connect it to the shutoff valve. Make sure the tubing is fully inserted into the valve. Tighten the compression nut securely.

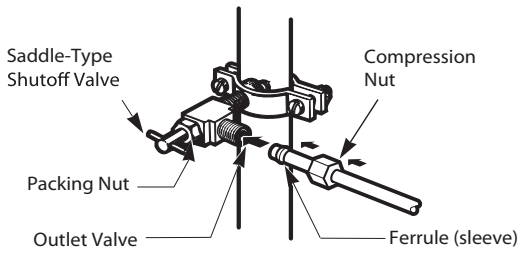

8 FLUSH OUT THE TUBING

Turn the main water supply on and flush out the tubing until the water is clear.

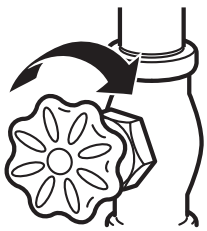

Shut the water off at the water valve after about one quart of water has been flushed through the tubing.

9 CONNECT THE TUBING TO THE REFRIGERATOR

NOTE: Before making the connection to the refrigerator, be sure that the refrigerator power cord is not plugged into the wall outlet.

a. Remove the plastic flexible cap from the water valve.

b. Place the compression nut and ferrule (sleeve) onto the end of the tubing as shown.

c. Insert the end of the copper tubing into the connection as far as possible. While holding the tubing, tighten the fitting.

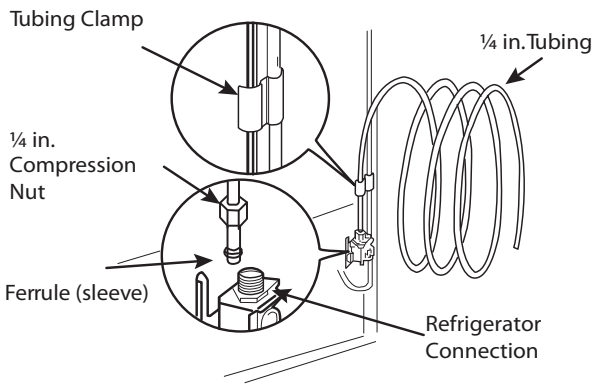

10 TURN THE WATER ON AT THE SHUTOFF VALVE

Tighten any connections that leak.

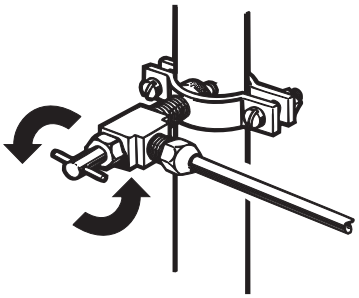

CAUTION

Check to see if leaks occur at the water line connections.

11 PLUG IN THE REFRIGERATOR

Arrange the coil of tubing so that it does not vibrate against the back of the refrigerator or against the wall. Push the refrigerator back to the wall.

12 START THE ICEMAKER

Set the icemaker power switch to the ON position.

The icemaker will not begin to operate until it reaches its operating temperature of 15°F (–9°C) or below. It will then begin operation automatically if the icemaker power switch is in the ON (I) position.

WARNING

Never use old or used hoses. Always use new ones to have a better use and experience. Connect always to a potable water source to avoid security and health issues.

Turning On The Power

1 Plug in the refrigerator.

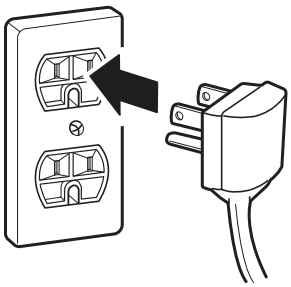

CAUTION

- Connect to a rated power outlet.
- Have a certified electrician check the wall outlet and wiring for proper grounding.
- Do not damage or cut off the ground terminal of the power plug.

Leveling and Door Alignment

Leveling

After installing, plug the refrigerator's power cord into a 3-prong grounded outlet and push the refrigerator into the final position.

Your refrigerator has two front leveling legs—one on the right and one on the left. Adjust the legs to alter the tilt from front-to-back or side-to-side. If your refrigerator seems unsteady, or you want the doors to close more easily, adjust the refrigerator's tilt using the instructions below:

1 Turn the leveling leg to the left to raise that side of the refrigerator or to the right to lower it. It may take several turns of the leveling leg to adjust the tilt of the refrigerator.

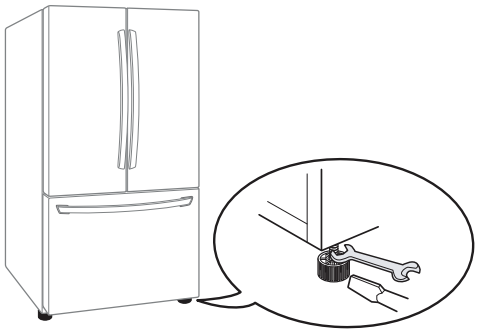

NOTE

A flare nut wrench works best, but an open-end wrench will suffice. Do not over-tighten.

2 Open both doors again and check to make sure that they close easily. If the doors do not close easily, tilt the refrigerator slightly more to the rear by turning both leveling legs to the left. It may take several more turns, and you should turn both leveling legs the same amount.

Door Alignment

Identify your Refrigerator Doors alignment type according the accesory included in your owners manual.

Door Alignment (Type 1)

Both the left and right refrigerator doors have an adjustable nut, located on the bottom hinge, to raise and lower them to align properly. If the space between your doors is uneven, follow the instructions below to align the doors evenly:

Use the wrench (included with the Owner's Manual) to turn the nut in the door hinge to adjust the height. To the right to raise or to the left to lower the height.

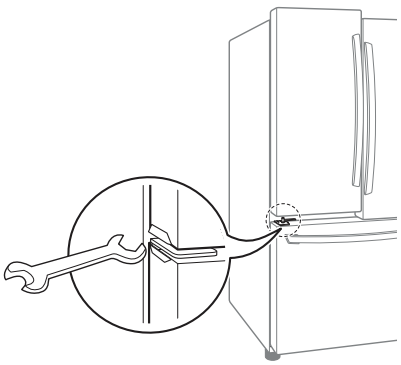

Door Alignment (Type 2)

If the spacing between the doors is uneven, follow the instructions below to align them:

1. With one hand, lift up the door you want to raise at middle hinge.
2. With other hand, use pliers to insert snap ring as shown.
3. Insert additional snap rings until the doors are aligned (Three snap rings are provided per unit).

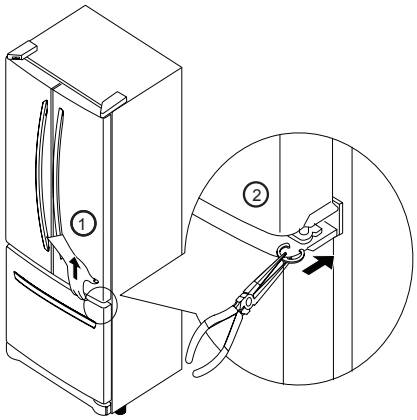

HOW TO USE

Before use

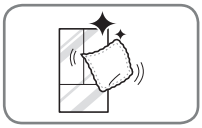

Clean the refrigerator.

Clean your refrigerator thoroughly and wipe off all dust that accumulated during shipping.

CAUTION

- Do not scratch the refrigerator with a sharp object or use a detergent that contains alcohol, a flammable liquid or an abrasive when removing any tape or adhesive from the refrigerator,.
- Do not peel off the model or serial number label or the technical information on the rear surface of the refrigerator.

NOTE

Remove adhesive residue by wiping it off with your thumb or dish detergent.

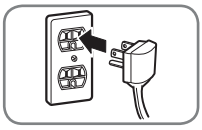

Connect the power supply.

Check if the power supply is connected before use.
Read the "Turning On The Power" section.

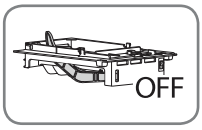

Turn off the icemaker if the refrigerator is not yet connected to the water supply.

Turn off the automatic icemaker and then plug the power plug of the refrigerator into the grounded electric outlet.
*This is applicable only to certain models.

CAUTION

Running the automatic icemaker before connecting it to the water supply may cause the refrigerator to malfunction.

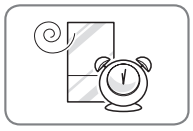

Wait for the refrigerator to cool.

Allow your refrigerator to run for at least two to three hours before putting food in it. Check the flow of cold air in the freezer compartment to ensure proper cooling.

CAUTION

Putting food in the refrigerator before it has cooled could cause the food to spoil, or a bad odor could remain inside the refrigerator.

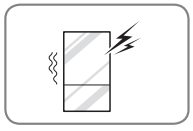

The refrigerator makes a loud noise after initial operation.

This is normal. The volume will decrease as the temperature lowers.

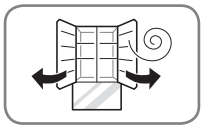

Open refrigerator doors and freezer drawers to ventilate the interior.

The inside of the refrigerator may smell like plastic at first. Remove any adhesive tape from inside the refrigerator and open the refrigerator doors and the freezer drawers for ventilation.

Control Pad

* Depending on the model, some of the following functions may not be available.

Control Pad Features

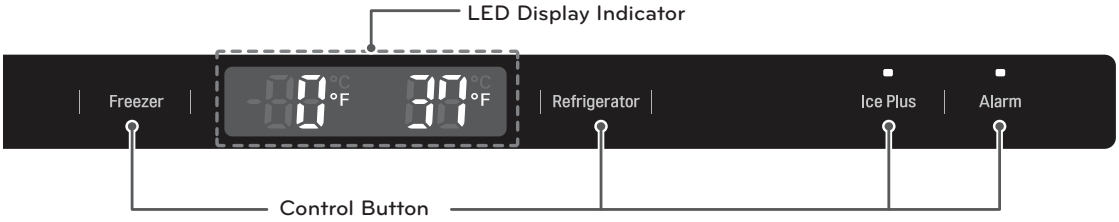

Refrigerator Temperature



Indicates the set temperature of the refrigerator compartment in Celsius (°C) or Fahrenheit (°F).

Freezer Temperature



Indicates the set temperature of the freezer compartment in Celsius (°C) or Fahrenheit (°F).

To change the temperature mode from °F to °C (or vice versa) press and hold the Refrigerator and Freezer temperature buttons simultaneously for approximately five seconds. The temperature indicator on the display window switches between Celsius and Fahrenheit.

NOTE

The displayed temperature is the target temperature, and not the actual temperature of the refrigerator. The actual refrigerator temperature depends on the food inside the refrigerator.

Ice Plus



This function increases both ice making and freezing capabilities.

- When you touch the **Ice Plus** button, the graphic will illuminate in the display and will continue for 24 hours. The function will automatically shut off after 24 hours.
- You can stop this function manually by touching the button one more time.

Door Alarm



- When power is connected to the refrigerator, the door alarm is initially set to ON. When you press the **Door Alarm** button, the display will change to OFF and the **Door Alarm** function will deactivate.
- When either the refrigerator or the freezer door is left open for more than 60 seconds, the alarm tone will sound to let you know that the door is open.
- When you close the door, the door alarm will stop.

CAUTION

Display Mode (For Store Use Only)
The Display Mode disables all cooling in the refrigerator and freezer sections to conserve energy while on display in a retail store. When activated OFF will display on the control panel and the display will remain on for 20 seconds.

To deactivate / activate:
With either refrigerator door opened, press and hold the Refrigerator and Ice Plus buttons at the same time for five seconds. The control panel will beep and the temperature settings will display to confirm that Display Mode is deactivated. Use the same procedure to activate Display Mode.

Automatic Icemaker (Freezer Room)

* Depending on the model, some of the following functions may not be available.

Ice is made in the automatic icemaker and sent to the dispenser. The icemaker will produce 12 cubes per cycle—approximately 120 cubes in a 24-hour period, depending on freezer compartment temperature, room temperature, number of door openings and other operating conditions.

- It takes about 12 to 24 hours for a newly installed refrigerator to begin making ice.
- The water pressure must be between 20 and 120 psi (0,14 y 0,82 MPa) on models without a water filter and between 40 and 120 psi (0,28 y 0,82 MPa) on models with a water filter to produce the normal amount and size of ice cubes.
- Foreign substances or frost on the ice-detecting sensor can interrupt ice production. Make sure the sensor area is clean at all times for proper operation.

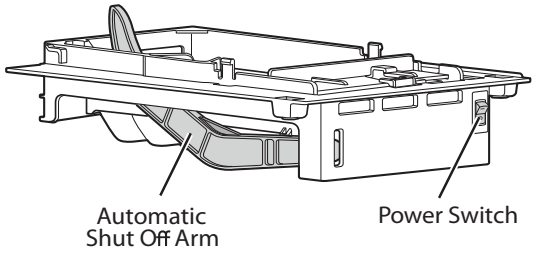

Turning the Automatic Icemaker On or Off

To turn off the automatic icemaker, set the icemaker switch to OFF (O). To turn on the automatic icemaker, set the switch to ON (I) .

Automatic Icemaker (continued)

CAUTION

- The first ice produced may include particles or odor from the water supply line or the water tank.
- Throw away the first few batches of ice (about 24 cubes). This is also necessary if the refrigerator has not been used for a long time.
- Never store beverage cans or other items in the ice bin for the purpose of rapid cooling. Doing so may damage the icemaker or the containers may burst.
- If discolored ice is dispensed, check the water filter and water supply. If the problem continues, contact a qualified service center. Do not use the ice or water until the problem is corrected.
- Be sure nothing interferes with the sweep of the automatic shut off arm.
- It is normal for some cubes to be stuck together.
- If ice is not used frequently, old ice cubes will become cloudy, taste stale, and shrink.
- Never use thin crystal glass or crockery to collect ice. Such containers may chip or break resulting in glass fragments in the ice.

When You Should Turn the Icemaker Off

- When the water supply will be shut off for several hours.
- When the ice bin is removed for more than one or two minutes.
- When the refrigerator will not be used for several days.

NOTE

The ice bin should be emptied when the icemaker on/off switch is turned to the OFF position.

Normal Sounds You May Hear

- The icemaker water valve will buzz as the icemaker fills with water. If the power switch is in the ON (I) position, it will buzz even if it has not yet been hooked up to water. To stop the buzzing, move the power switch to OFF (O).

NOTE

Keeping the power switch in the ON (I) position before the water line is connected can damage the icemaker.

- You will hear the sound of cubes dropping into the bin and water running in the pipes as the icemaker refills.

Preparing For Vacation

Set the icemaker power switch to OFF (O) and shut off the water supply to the refrigerator.

NOTE

The ice bin should be emptied anytime the icemaker on/off switch is turned to the OFF (O) position.

If the ambient temperature will drop below freezing, have a qualified technician drain the water supply system to prevent serious property damage due to flooding caused by ruptured water lines or connections.

Storing Food

Food Preservation Location

Each compartment inside the refrigerator is designed to store different types of food.

Store your food in the optimal space to enjoy the freshest taste.

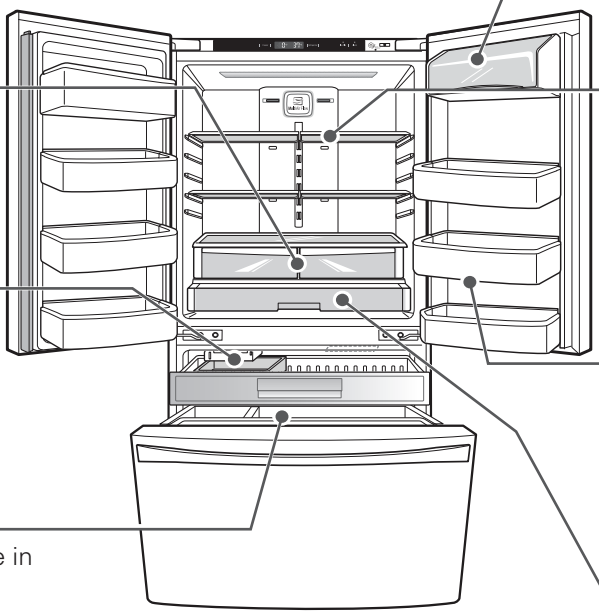

Dairy product bin

Vegetable storage (Crispers)
Preserve vegetables and fruit.

Adjustable refrigerator shelf
Adjustable shelves to meet your individual storage needs.

Ice bin
Stores ice.

Modular door bin
Store drinks such as juice and soda, as well as seasonings, salad dressings and other food items.

Durabase®
Largest storage space in the freezer.

Pantry Drawer
Provides storage space for large party trays, deli items and beverages.

CAUTION

- Do not store food with high moisture content towards the top of the refrigerator. The moisture could come in direct contact with the cold air and freeze.
- Wash food before storing it in the refrigerator. If necessary, rinse and thoroughly pat dry vegetables and fruit to remove obvious soil, juice, or blemished areas, and wipe down food packaging to prevent adjacent foods from being contaminated.
- If the refrigerator is kept in a hot and humid place, frequent opening of the door or storing a lot of vegetables in the refrigerator may cause condensation to form. Wipe off the condensation with a clean cloth or a paper towel.
- If the refrigerator door or freezer drawer is opened too often, warm air may penetrate the refrigerator and raise its temperature. This can increase the running costs of the unit.

NOTE

- If you are leaving home for a short period of time, like a short vacation, the refrigerator should be left on. Refrigerated foods that are able to be frozen will stay preserved longer if stored in the freezer.
- If you are leaving the refrigerator turned off for an extended period of time, remove all food and unplug the power cord. Clean the interior, and leave the door open to prevent fungi from growing in the refrigerator.

Food Storage Tips

*The following tips may not be applicable depending on the model.

Wrap or store food in the refrigerator in airtight and moisture-proof material unless otherwise noted. This prevents food odor and taste transfer throughout the refrigerator. For dated products, check date code to ensure freshness.

Food	How To
Butter or Margarine	Keep opened butter in a covered dish or closed compartment. When storing an extra supply, wrap in freezer packaging and freeze.
Cheese	Store in the original wrapping until you are ready to use it. Once opened, rewrap tightly in plastic wrap or aluminum foil.
Milk	Wipe milk cartons. For coldest milk, place containers on an interior shelf.
Eggs	Store in original carton on interior shelf, not on door shelf.
Fruit	Do not wash or hull the fruit until it is ready to be used. Sort and keep fruit in its original container, in a crisper, or store in a completely closed paper bag on a refrigerator shelf.
Leafy Vegetables	Remove store wrapping and trim or tear off bruised and discolored areas. Wash in cold water and drain. Place in plastic bag or plastic container and store in crisper.
Vegetables with skins (carrots, peppers)	Place in plastic bags or plastic container and store in crisper.
Fish	Store fresh fish and shellfish in the freezer section if they are not being consumed the same day of purchase It is recommended to consume fresh fish and shellfish the same day purchased.
Leftovers	Cover leftovers with plastic wrap or aluminum foil, or store in plastic containers with tight lids.

Storing Frozen Food

NOTE

Check a freezer guide or a reliable cookbook for further information about preparing food for freezing or food storage times.

Freezing

Your freezer will not quick-freeze a large quantity of food. Do not put more unfrozen food into the freezer than will freeze within 24 hours (no more than 2 to 3 lbs. of food per cubic foot of freezer space). Leave enough space in the freezer for air to circulate around packages. Be careful to leave enough room at the front so the door can close tightly.

Storage times will vary according to the quality and type of food, the type of packaging or wrap used (how airtight and moisture-proof) and the storage temperature. Ice crystals inside a sealed package are normal. This simply means that moisture in the food and air inside the package have condensed, creating ice crystals.

NOTE

Allow hot foods to cool at room temperature for 30 minutes, then package and freeze. Cooling hot foods before freezing saves energy.

Storing Frozen Food (continued)

Packaging

Successful freezing depends on correct packaging. When you close and seal the package, it must not allow air or moisture in or out. If it does, you could have food odor and taste transfer throughout the refrigerator and could also dry out frozen food.

Packaging recommendations:

- Rigid plastic containers with tight-fitting lids
- Straight-sided canning/freezing jars
- Heavy-duty aluminum foil
- Plastic-coated paper
- Non-permeable plastic wraps
- Specified freezer-grade self-sealing plastic bags

Follow package or container instructions for proper freezing methods.

Do not use

- Bread wrappers
- Non-polyethylene plastic containers
- Containers without tight lids
- Wax paper or wax-coated freezer wrap
- Thin, semi-permeable wrap

Humidity Controlled Crisper and Glide'N'Serve

Humidity Controlled Crisper

* Depending on the model, some of the following functions may not be available.

The crispers provide fresher tasting fruit and vegetables by letting you easily control humidity inside the drawer.

You can control the amount of humidity in the moisture-sealed crispers by adjusting the control to any setting between Vegetable and Fruit.

- Vegetable keeps moist air in the crisper for best storage of fresh, leafy vegetables.
- Fruit lets moist air out of the crisper for best storage of fruit.

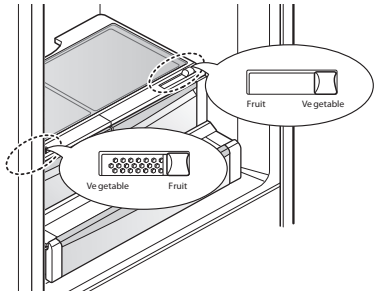

Glide'N'Serve

This drawer can be used for large party trays, deli items and beverages. (This drawer should not be used for vegetables that require high humidity.)

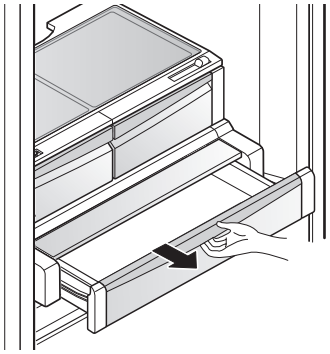

Detaching and Assembling the Storage Bins

Glide'N'Serve and Humidity Controlled Crisper

To remove the Humidity Controlled Crisper and the Glide'N'Serve, pull out the Crisper 1 and Glide'N'Serve 2 to full extension, lift the front up, and pull straight out.

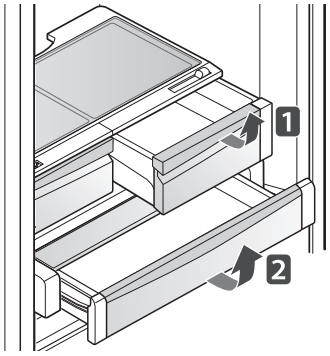

To install, slightly tilt up the front, insert the drawer into the frame and push it back into place.

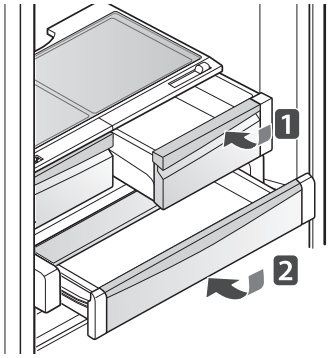

To Remove the Glass

(Pantry drawer not shown for clarity)

Lift up the glass under the crisper cover, and pull up and out.

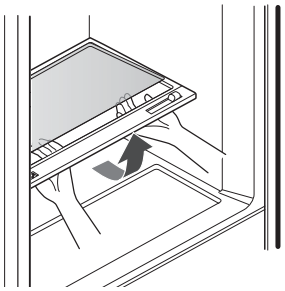

Door Bins

The door bins are removable for easy cleaning and adjustment.

1 To remove the bin, simply lift the bin up and pull straight out.

2 To replace the bin, slide it in above the desired support and push down until it snaps into place.

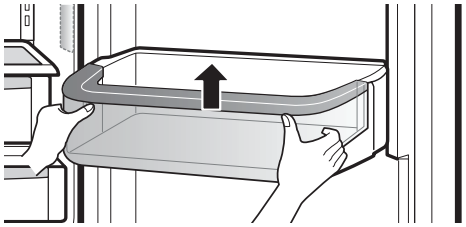

NOTE

Some bins may vary in appearance and will only fit in one location.

CAUTION

- Do not apply excessive force while detaching or assembling the storage bins.
- Do not use the dishwasher to clean the storage bins and shelves.
- Regularly detach and wash the storage bins and shelves; they can become easily contaminated by the food.

Adjusting the Refrigerator Shelves

The shelves in your refrigerator are adjustable to meet your individual storage needs. Your model may have full or split shelves.

Adjusting the shelves to fit items of different heights will make finding the exact item you want easier. Doing so will also reduce the amount of time the refrigerator door is open which will save energy.

Detaching the Shelf

Tilt up the front of the shelf and then lift the shelf straight up. Pull the shelf out.

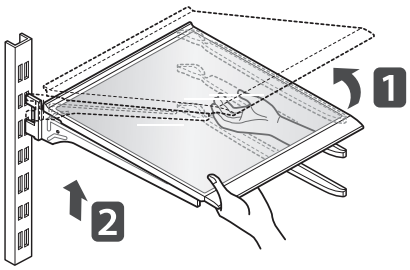

Assembling the Shelf

Tilt the front of the shelf up and guide the shelf hooks into the slots at a desired height. Then, lower the front of the shelf so that the hooks drop into the slots.

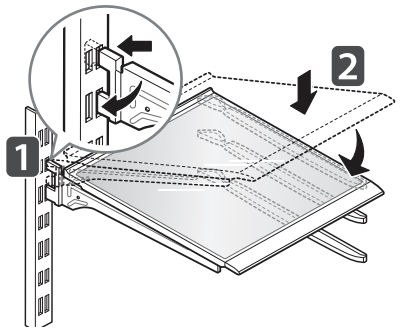

CAUTION

Make sure that shelves are level from one side to the other. Failure to do so may result in the shelf falling or spilling food.

CAUTION

- Do not clean glass shelves with warm water while they are cold. Shelves may break if exposed to sudden temperature changes or impact.
- Glass shelves are heavy. Use special care when removing them.

ENGLISH

MAINTENANCE

Cleaning

- Both the refrigerator and freezer sections defrost automatically; however, clean both sections about once a month to prevent odors.
- Wipe up spills immediately.
- Always unplug the refrigeration before cleaning.

General Cleaning Tips

- Unplug refrigerator or disconnect power.
- Remove all removable parts, such as shelves, crispers, etc.
- Use a clean sponge or soft cloth and a mild detergent in warm water. Do not use abrasive or harsh cleaners.
- Hand wash, rinse and dry all surfaces thoroughly.

Exterior

Waxing external painted metal surfaces helps provide rust protection. Do not wax plastic parts. Wax painted metal surfaces at least twice a year using appliance wax (or auto paste wax). Apply wax with a clean, soft cloth.

For products with a stainless steel exterior, use a clean sponge or soft cloth and a mild detergent in warm water. Do not use abrasive or harsh cleaners. Dry thoroughly with a soft cloth.

CAUTION

- Do not use a rough cloth or sponge when cleaning the interior and exterior of the refrigerator.
- Do not place your hand on the bottom surface of the refrigerator when opening and closing.

WARNING

Use non-flammable cleaner. Failure to do so can result in fire, explosion, or death.

WARNING

In case of replacement, the new lamp should be same specification as the original.

Inside Walls (allow freezer to warm up so the cloth will not stick)

To help remove odors, you can wash the inside of the refrigerator with a mixture of baking soda and warm water. Mix 2 tablespoons of baking soda to 1 quart of water (26 g soda to 1 liter water.) Be sure the baking soda is completely dissolved so it does not scratch the surfaces of the refrigerator.

Door Liners and Gaskets

Use a clean sponge or soft cloth and a mild detergent in warm water. Do not use cleaning waxes, concentrated detergents, bleaches, or cleaners containing petroleum on plastic refrigerator parts.

Plastic Parts (covers and panels)

Use a clean sponge or soft cloth and a mild detergent in warm water. Do not use window sprays, abrasive cleansers, or flammable fluids. These can scratch or damage the material.

Condenser Coils

Use a vacuum cleaner with an attachment to clean the condenser cover and vents. Do not remove the panel covering the condenser coil area.

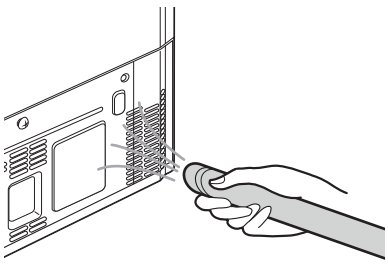

LIGHT (LED) REPLACEMENT

Note: Do not remove the LED, it is only to be removed by qualified technician.

SMART DIAGNOSIS™ (Some models).

Should you experience any problems with your refrigerator, it has the capability of transmitting data via your telephone to the LG service center. This gives you the capability of speaking directly to our trained specialists. The specialist records the data transmitted from your machine and uses it to analyze the issue, providing a fast and effective diagnosis.

If you experience problems with your refrigerator, call 1-800-243-0000 in USA (1-888-542-2623 in Canada). Only use the Smart Diagnosis™ feature when instructed to do so by the LG call center agent. The transmission sounds that you will hear are normal and sound similar to a fax machine.

Smart Diagnosis™ cannot be activated unless your refrigerator is connected to power. If your refrigerator is unable to turn on, then troubleshooting must be done without using Smart Diagnosis. ™

Using Smart Diagnosis™

First, call 1-800-243-0000 (1-888-542-2623 in Canada). Only use the Smart Diagnosis™ feature when instructed to do so by the LG call center agent.

1 Open the refrigerator door.

2 Hold the mouthpiece of your phone in front of the speaker that is located on the right side of the control pad, when instructed to do so by the call center.

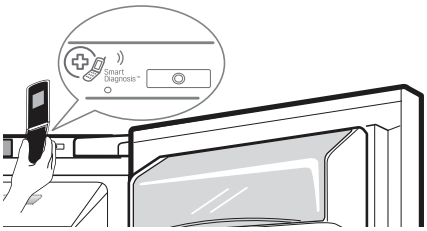

3 Press and hold the Freezer button for three seconds while continuing to hold your phone to the speaker .



4 After you hear three beeps, release the Freezer button.

5 Keep the phone in place until the tone transmission has finished. This takes about 3 seconds, and the display will count down the time. Once the countdown is over and the tones have stopped, resume your conversation with the specialist, who will then be able to assist you in using the information transmitted for analysis.

NOTE

- For best results, do not move the phone while the tones are being transmitted.
- If the call center agent is not able to get an accurate recording of the data, you may be asked to try again.

NOTE

- Call quality differences by region may affect the function.
- Use the home telephone for better communication performance, resulting in better service.
- Bad call quality may result in poor data transmission from your phone to the machine, which could cause Smart Diagnosis ™ to malfunction. .

TROUBLESHOOTING

Review the Troubleshooting section before calling for service; doing so will save you both time and money.

Problem	Possible causes	Solutions
Refrigerator and Freezer section are not cooling.	The refrigerator control is set to OFF (some models).	Turn the control ON. Refer to the Setting the Controls section for proper temperature settings.
	Refrigerator is in the defrost cycle.	During the defrost cycle, the temperature of each compartment may rise slightly. Wait 30 minutes and confirm the proper temperature has been restored once the defrost cycle has completed.
	Refrigerator was recently installed.	It may take up to 24 hours for each compartment to reach the desired temperature.
	Refrigerator was recently relocated.	If the refrigerator was stored for a long period of time or moved on its side, it is necessary for the refrigerator to stand upright for 24 hours before connecting it to power.
Cooling System runs too much.	Refrigerator is replacing an older model.	Modern refrigerators require more operating time but use less energy due to more efficient technology.
	Refrigerator was recently plugged in or power restored.	The refrigerator will take up to 24 hours to cool completely.
	The door is opened often or a large amount of food / hot food was added.	Adding food and opening the door warms the refrigerator, requiring the compressor to run longer in order to cool the refrigerator back down. In order to conserve energy, try to get everything you need out of the refrigerator at once, keep food organized so it is easy to find, and close the door as soon as the food is removed. (Refer to the Food Storage Guide.)
	Doors are not closed completely.	Firmly push the doors shut. If they will not shut all the way, see the Doors will not close completely or pop open section in Troubleshooting.
	Refrigerator is installed in a hot location.	The compressor will run longer under warm conditions. At normal room temperatures 70°F (21 °C) expect your compressor to run about 40% to 80% of the time. Under warmer conditions, expect it to run even more often. The refrigerator should not be operated above 110°F (43 °C).
	Condenser / back cover is clogged.	Use a vacuum cleaner with an attachment to clean the condenser cover and vents. Do not remove the panel covering the condenser coil area.

Problem	Possible causes	Solutions
Refrigerator or Freezer section is too warm.	Refrigerator was recently installed.	It may take up to 24 hours for each compartment to reach the desired temperature.
	The air vents are blocked. Cold air circulates from the freezer to the fresh food section and back again through air vents in the wall dividing the two sections.	Locate air vents by using your hand to sense airflow and move all packages that block vents and restrict airflow. Rearrange items to allow air to flow throughout the compartment. (Refer to the Airflow diagram in the Using Your Refrigerator section.)
	Doors are opened often or for long periods of time.	When the doors are opened often or for long periods of time, warm, humid air enters the compartment. This raises the temperature and moisture level within the compartment. To lessen the effect, reduce the frequency and duration of door openings.
	Unit is installed in a hot location.	The refrigerator should not be operated in temperatures above 110°F (43 °C).
	A large amount of food or hot food was added to either compartment.	Adding food warms the compartment requiring the cooling system to run. Allowing hot food to cool to room temperature before putting it in the refrigerator will reduce this effect.
	Doors not closed correctly.	See the Doors will not close correctly or pop open section in Parts & Features Troubleshooting.
	Temperature control is not set correctly.	If the temperature is too warm, adjust the control one increment at a time and wait for the temperature to stabilize. Refer to the Setting the Controls section for more information.
	Defrost cycle has recently completed.	During the defrost cycle, the temperature of each compartment may rise slightly and condensation may form on the back wall. Wait 30 minutes and confirm the proper temperature has been restored once the defrost cycle has completed.

Problem	Possible causes	Solutions
Interior moisture buildup.	Doors are opened often or for long periods of time.	When the doors are opened often or for long periods of time, warm, humid air enters the compartment. This raises the temperature and moisture level within the compartment. To lessen the effect, reduce the frequency and duration of door openings.
	Doors not closed correctly.	See the Doors will not close correctly section in the Troubleshooting section.
	Weather is humid.	Humid weather allows additional moisture to enter the compartments when the doors are opened leading to condensation or frost. Maintaining a reasonable level of humidity in the home will help to control the amount of moisture that can enter the compartments.
	Defrost cycle recently completed.	During the defrost cycle, the temperature of each compartment may raise slightly and condensation may form on the back wall. Wait 30 minutes and confirm that the proper temperature has been restored once the defrost cycle has completed.
	Food is not packaged correctly.	Food stored uncovered or unwrapped, and damp containers can lead to moisture accumulation within each compartment. Wipe all containers dry and store food in sealed packaging to prevent condensation and frost.
Food is freezing in the refrigerator compartment.	Food with high water content was placed near an air vent.	Rearrange items with high water content away from air vents.
	Refrigerator temperature control is set incorrectly.	If the temperature is too cold, adjust the control one increment at a time and wait for the temperature to stabilize. Refer to the Setting the Controls section for more information.
	Refrigerator is installed in a cold location.	When the refrigerator is operated in temperatures below 41°F (5°C), food can freeze in the refrigerator compartment. The refrigerator should not be operated in temperatures below 55°F (13°C).
Frost or ice crystals form on frozen food (outside of package).	Door is opened frequently or for long periods of time.	When the doors are opened often or for long periods of time, warm, humid air enters the compartment. This raises the temperature and moisture level within the compartment. Increased moisture will lead to frost and condensation. To lessen the effect, reduce the frequency and duration of door openings.
	Door is not closing properly.	Refer to the Doors will not close correctly or pop open section in the Troubleshooting section.
Refrigerator or Freezer section is too cold.	Incorrect temperature control settings.	If the temperature is too cold, adjust the control one increment at a time and wait for the temperature to stabilize. Refer to the Setting the Controls section for more information.

Problem	Possible causes	Solutions
Frost or ice crystals on frozen food (inside of sealed package).	Condensation from food with a high water content has frozen inside of the food package.	This is normal for food items with a high water content.
	Food has been left in the freezer for a long period of time.	Do not store food items with high water content in the freezer for a long period of time.
Icemaker is not making enough ice.	Demand exceeds ice storage capacity.	The icemaker will produce approximately 70-210 cubes in a 24 hour period.
	House water supply is not connected, valve is not turned on fully, or valve is clogged.	Connect the refrigerator to a cold water supply with adequate pressure and turn the water shutoff valve fully open. If the problem persists, it may be necessary to contact a plumber.
	Water filter has been exhausted.	It is recommended that you replace the water filter: • Approximately every six months. • When the water filter indicator turns on. • When the water dispenser output decreases. • When the ice cubes are smaller than normal.
	Low house water supply pressure.	The water pressure must be between 20 and 120 psi (0,14 y 0,82 MPa) on models without a water filter and between 40 and 120 psi (0,28 y 0,82 MPa) on models with a water filter. If the problem persists, it may be necessary to contact a plumber.
	Reverse Osmosis filtration system is used.	Reverse osmosis filtration systems can reduce the water pressure below the minimum amount and result in icemaker issues. (Refer to Water Pressure section.)
	Tubing connecting refrigerator to house supply valve is kinked.	The tubing can kink when the refrigerator is moved during installation or cleaning resulting in reduced water flow. Straighten or repair the water supply line and arrange it to prevent future kinks.
	Doors are opened often or for long periods of time.	If the doors of the unit are opened often, ambient air will warm the refrigerator which will prevent the unit from maintaining the set temperature. Lowering the refrigerator temperature can help, as well as not opening the doors as frequently.
	Doors are not closed completely.	If the doors are not properly closed, ice production will be affected. See the Doors will not close completely or pop open section in Parts & Features Troubleshooting for more information.
	The temperature setting for the freezer is too warm.	The recommended temperature for the freezer compartment for normal ice production is 0°F (–18 °C). If the freezer temperature is warmer, ice production will be affected.

Problem	Possible causes	Solutions
Icemaker is not making enough ice (continued).	Refrigerator was recently installed or icemaker recently connected.	It may take up to 24 hours for each compartment to reach the desired temperature and for the icemaker to begin making ice.
	Icemaker not turned on.	Locate the icemaker ON/OFF switch and confirm that it is in the ON (I) position.
	The ice detecting sensor is obstructed.	Foreign substances or frost on the ice-detecting sensor can interrupt ice production. Make sure that the sensor area is clean at all times for proper operation.
	The refrigerator is not connected to a water supply or the supply shutoff valve is not turned on.	Connect the refrigerator to the water supply and turn the water shutoff valve fully open.
	Icemaker shutoff (arm or sensor) obstructed.	If your icemaker is equipped with an ice shutoff arm, make sure that the arm moves freely. If your icemaker is equipped with the electronic ice shutoff sensor, make sure that there is a clear path between the two sensors.
	Reverse osmosis water filtration system is connected to your cold water supply.	Reverse osmosis filtration systems can reduce the water pressure below the minimum amount and result in icemaker issues. (Refer to the Water Pressure section.)
Ice has bad taste or odor.	Water supply contains minerals such as sulfur.	A water filter may need to be installed to eliminate taste and odor problems. NOTE: In some cases, a filter may not help. It may not be possible to remove all minerals/odor/taste in all water supplies.
	Icemaker was recently installed.	Ice that has been stored for too long will shrink, become cloudy, and may develop a stale taste. Throw away old ice and make a new supply.
	The food has not been stored properly in either compartment.	Rewrap the food. Odors may migrate to the ice if food is not wrapped properly.
	The interior of the refrigerator needs to be cleaned.	See the Care and Cleaning section for more information.
	The ice storage bin needs to be cleaned.	Empty and wash the bin (discard old cubes). Make sure that the bin is completely dry before reinstalling it.
Icemaker is making too much ice.	Icemaker shutoff (arm/ sensor) is obstructed	Empty the ice bin. If your icemaker is equipped with an ice shutoff arm, make sure that the arm moves freely. If your icemaker is equipped with the electronic ice shutoff sensor, make sure that there is a clear path between the two sensors. Reinstall the ice bin and wait 24 hours to confirm proper operation.

Problem	Possible causes	Solutions
Clicking	The defrost control will click when the automatic defrost cycle begins and ends. The thermostat control (or refrigerator control on some models) will also click when cycling on and off.	Normal Operation
Rattling	Rattling noises may come from the flow of refrigerant, the water line on the back of the unit, or items stored on top of or around the refrigerator.	Normal Operation
	Refrigerator is not resting solidly on the floor.	Floor is weak or uneven or leveling legs need to be adjusted. See the Door Alignment section.
	Refrigerator with linear compressor was jarred while running.	Normal Operation
Whooshing	Evaporator fan motor is circulating air through the refrigerator and freezer compartments.	Normal Operation
	Air is being forced over the condenser by the condenser fan.	Normal Operation
Gurgling	Refrigerant flowing through the cooling system.	Normal Operation
Popping	Contraction and expansion of the inside walls due to changes in temperature.	Normal Operation
Sizzling	Water dripping on the defrost heater during a defrost cycle.	Normal Operation
Vibrating	If the side or back of the refrigerator is touching a cabinet or wall, some of the normal vibrations may make an audible sound.	To eliminate the noise, make sure that the sides and back cannot vibrate against any wall or cabinet.
Dripping	Water running into the drain pan during the defrost cycle.	Normal Operation
Pulsating or High-Pitched Sound	Your refrigerator is designed to run more efficiently to keep your food items at the desired temperature. The high efficiency compressor may cause your new refrigerator to run longer than your old one, but it is still more energy efficient than previous models. While the refrigerator is running, it is normal to hear a pulsating or high-pitched sound.	Normal Operation

Problem	Possible causes	Solutions
Doors will not close correctly or pop open.	Food packages are blocking the door open.	Rearrange food containers to clear the door and door shelves.
	Ice bin, crisper cover, pans, shelves, door bins, or baskets are out of position.	Push bins all the way in and put crisper cover, pans, shelves and baskets into their correct positions. See the Using Your Refrigerator section for more information.
	The doors were removed during product installation and not properly replaced.	Remove and replace the doors according to the Removing and Replacing Refrigerator Handles and Doors section.
	Refrigerator is not leveled properly.	See Door Alignment in the Refrigeration Installation section to level refrigerator.
Doors are difficult to open.	The gaskets are dirty or sticky.	Clean the gaskets and the surfaces that they touch. Rub a thin coat of appliance polish or kitchen wax on the gaskets after cleaning.
	Door was recently closed.	When you open the door, warmer air enters the refrigerator. As the warm air cools, it can create a vacuum. If the door is hard to open, wait one minute to allow the air pressure to equalize, then see if it opens more easily.
Refrigerator wobbles or seems unstable.	Leveling legs are not adjusted properly.	Refer to the Leveling and Door Alignment section.
	Floor is not level.	It may be necessary to add shims under the leveling legs or rollers to complete installation.
Lights do not work.	LED interior lighting failure.	The refrigerator compartment lamp is LED interior lighting, and service should be performed by a qualified technician. Refer to the Light Bulb Replacement section.
Refrigerator has an unusual odor.	The Air Filter may need to be set to the MAX setting or replaced.	Set the Air Filter to the MAX setting. If the odor does not go away within 24 hours, the filter may need to be replaced. See the Replacing the Air Filter section for replacement instructions.
The interior of the refrigerator is covered with dust or soot.	The refrigerator is located near a fire source, such as a fireplace, chimney, or candle.	Make sure that the refrigerator is not located near a fire source, such as a fireplace, chimney or candle.

LG ELECTRONICS U.S.A., INC.
LG REFRIGERATOR LIMITED WARRANTY - U.S.A.

Should your LG Refrigerator ("Product") fail due to a defect in materials or workmanship under normal home use, during the warranty period set forth below, LG will at its option repair or replace the product. This limited warranty is valid only to the original retail purchaser of the product and applies only when purchased and used within the United States including U.S. Territories. Proof of original retail purchase is required to obtain warranty service under this limited warranty.

WARRANTY PERIOD			
Refrigerator	**Sealed System (Condenser, Dryer, Connecting Tube, Refrigerant and Evaporator)**		**Linear Compressor**
One (1) year from the date of original retail purchase.	One (1) year from the date of original retail purchase.	Seven (7) years from the date of original retail purchase.	Ten (10) years from the date of original retail purchase.
Parts and Labor (internal/functional parts only)	Parts and Labor	Parts only (Consumer will be charged for labor)	Part only (Consumer will be charged for labor)

Noises associated with normal operation and failure to follow instructions found in the use and care and installation guides or operating the unit in an unsuitable environment will not be covered under this warranty.

- **Replacement products and parts are warranted for the remaining portion of the original warranty period or ninety (90) days, whichever is greater.**
- **Replacement products and parts may be new or remanufactured.**

THIS WARRANTY IS IN LIEU OF ANY OTHER WARRANTY, EXPRESS OR IMPLIED, INCLUDING WITHOUT LIMITATION, ANY WARRANTY OF MERCHANTABILITY OR FITNESS FOR A PARTICULAR PURPOSE. TO THE EXTENT ANY IMPLIED WARRANTY IS REQUIRED BY LAW, IT IS LIMITED IN DURATION TO THE EXPRESS WARRANTY PERIOD ABOVE. NEITHER THE MANUFACTURER NOR ITS U.S. DISTRIBUTOR SHALL BE LIABLE FOR ANY INCIDENTAL, CONSEQUENTIAL, INDIRECT, SPECIAL, OR PUNITIVE DAMAGES OF ANY NATURE, INCLUDING WITHOUT LIMITATION, LOST REVENUES OR PROFITS, OR ANY OTHER DAMAGE WHETHER BASED IN CONTRACT, TORT, OR OTHERWISE. Some states do not allow the exclusion or limitation of incidental or consequential damages or limitations on how long an implied warranty lasts, so the above exclusion or limitation may not apply to you. This warranty gives you specific legal rights and you may also have other rights that vary from state to state.

THIS LIMITED WARRANTY DOES NOT COVER:

1. Service trips to deliver, pick up, install, or repair the product; instruct the customer on operation of the product; repair or replace fuses or correct wiring or plumbing, or correction of unauthorized repairs/ installation.
2. Failure of product to perform during power failures and interruptions or inadequate electrical service.
3. Damage caused by leaky or broken water pipes, frozen water pipes, restricted drain lines, inadequate or interrupted water supply or inadequate supply of air.
4. Damage resulting from operating the product in a corrosive atmosphere or contrary to the instructions outlined in the product owner's manual.
5. Damage to the product caused by accidents, pests and vermin, lightning, wind, fire, floods, or acts of God.
6. Damage resulting from misuse, abuse, improper installation, repair, or maintenance. Improper repair includes use of parts not approved or specified by LG.
7. Damage or failure caused by unauthorized modification or alteration, or if it is used for other than the intended purpose, or any water leakage where the unit was not properly installed.
8. Damage or failure caused by incorrect electrical current, voltage, or plumbing codes, commercial or industrial use, or use of accessories, components, or consumable cleaning products that are not approved by LG.
9. Damage caused by transportation and handling, including scratches, dents, chips, and/or other damage to the finish of your product, unless such damage results from defects in materials or workmanship and is reported within one (1) week of delivery.
10. Damage or missing items to any display, open box, discounted, or refurbished product.
11. Products with original serial numbers that have been removed, altered, or can not be readily determined. Model and Serial numbers, along with original retail sales receipt, are required for warranty validation.
12. Increases in utility costs and additional utility expenses.
13. Replacement of light bulbs, filters, or any consumable parts.
14. Repairs when your product is used in other than normal and usual household use (e.g. commercial use, offices, and recreational facilities) or contrary to the instructions outlined in the product owner's manual.
15. Costs associated with removal of your product from your home for repairs.
16. The removal and reinstallation of the product if it is installed in an inaccessible location or is not installed in accordance with published installation instructions, including LG's owner's and installation manuals.
17. Shelves, door bins, drawers, handles, accessories, and other parts besides those that were originally included with this particular model.

The cost of repair or replacement under these excluded circumstances shall be borne by the consumer.

For complete warranty details and customer assistance,
please call or visit our website:
Call 1-800-243-0000 (24 hours a day, 365 days a year) and select the appropriate option from the menu, or visit our website at www.lg.com
Or by mail: LG Customer Information Center:
P. O. Box 240007, 201 James Record Road Huntsville, Alabama 35813
ATTN: CIC

Write your warranty information below:

Product Registration Information:

Model:
Serial Number:
Date of Purchase:

LG ELECTRONICS CANADA, INC.
LG REFRIGERATOR LIMITED WARRANTY - Canada

WARRANTY: Should your LG Refrigerator ("Product") fail due to a defect in material or workmanship under normal home use during the warranty period set forth below, LG Canada will at its option repair or replace the Product upon receipt of proof of original retail purchase.
This warranty is valid only to the original retail purchaser of the product and applies only to a Product distributed in Canada by LG Canada or an authorized Canadian distributor thereof. The warranty only applies to Products located and used within Canada.

WARRANTY PERIOD: (Note: If the original date of purchase can not be verified, the warranty will begin sixty (60) days from the date of manufacture)			
Refrigerator/Freezer	**Sealed System (Condenser, Dryer, Connecting Tube, Refrigerant and Evaporator)**		**Linear Compressor**
One (1) year from the date of original retail purchase.	One (1) year from the date of original retail purchase.	Seven (7) years from the date of original retail purchase.	Ten (10) years from the date of original retail purchase.
Parts and Labor (internal/functional parts only)	Parts and Labor	Parts only (Consumer will be charged for labor)	Part only (Consumer will be charged for labor)

Noises associated with normal operation and failure to follow instructions found in the use and care and installation guides or operating the unit in an unsuitable environment will not be covered under this warranty.

- **Replacement products and parts are warranted for the remaining portion of the original warranty period or ninety (90) days, whichever is greater.**
- **Replacement products and parts may be new or remanufactured.**
- **LG Authorized Service Center warranties their repair work for thirty (30) days.**

LG CANADA'S SOLE LIABILITY IS LIMITED TO THE WARRANTY SET OUT ABOVE. EXCEPT AS EXPRESSLY PROVIDED ABOVE, LG CANADA MAKES NO AND HEREBY DISCLAIMS ALL OTHER WARRANTIES AND CONDITIONS RESPECTING THE PRODUCT, WHETHER EXPRESS OR IMPLIED, INCLUDING, BUT NOT LIMITED TO, ANY IMPLIED WARRANTY OR CONDITION OF MERCHANTABILITY OR FITNESS FOR A PARTICULAR PURPOSE, AND NO REPRESENTATIONS SHALL BE BINDING ON LG CANADA. LG CANADA DOES NOT AUTHORIZE ANY PERSON TO CREATE OR ASSUME FOR IT ANY OTHER WARRANTY OBLIGATION OR LIABILITY IN CONNECTION WITH THE PRODUCT. TO THE EXTENT THAT ANY WARRANTY OR CONDITION IS IMPLIED BY LAW, IT IS LIMITED TO THE EXPRESS WARRANTY PERIOD ABOVE. LG CANADA, THE MANUFACTURER OR DISTRIBUTOR SHALL NOT BE LIABLE FOR ANY INCIDENTAL, CONSEQUENTIAL, SPECIAL, DIRECT OR INDIRECT DAMAGES, LOSS OF GOODWILL, LOST PROFITS, PUNITIVE OR EXEMPLARY DAMAGES OR ANY OTHER DAMAGE, WHETHER ARISING DIRECTLY OR INDIRECTLY FROM ANY CONTRACTUAL BREACH, FUNDAMENTAL OR OTHERWISE, OR FROM ANY ACTS OR OMISSIONS, TORT, OR OTHERWISE. This warranty gives you specific legal rights. You may have other rights which may vary from province to province depending on applicable provincial laws. Any term of this warranty that negates or varies any implied condition or warranty under provincial law is severable where it conflicts with provincial law without affecting the remainder of this warranty's terms.

THIS LIMITED WARRANTY DOES NOT COVER:

1. Service trips to deliver, pick up, install, or repair the product; instruct the customer on operation of the product; repair or replace fuses or correct wiring or plumbing, or correction of unauthorized repairs/installation.
2. Failure of product to perform during power failures and interruptions or inadequate electrical service.
3. Damage caused by leaky or broken water pipes, frozen water pipes, restricted drain lines, inadequate or interrupted water supply or inadequate supply of air.
4. Damage resulting from operating the product in a corrosive atmosphere or contrary to the instructions outlined in the product owner's manual.
5. Damage to the product caused by accidents, pests and vermin, lightning, wind, fire, floods, or acts of God.
6. Damage resulting from misuse, abuse, improper installation, repair, or maintenance. Improper repair includes use of parts not approved or specified by LG.
7. Damage or failure caused by unauthorized modification or alteration, or if it is used for other than the intended purpose, or any water leakage where the unit was not properly installed.
8. Damage or failure caused by incorrect electrical current, voltage, or plumbing codes, commercial or industrial use, or use of accessories, components, or consumable cleaning products that are not approved by LG.
9. Damage caused by transportation and handling, including scratches, dents, chips, and/or other damage to the finish of your product, unless such damage results from defects in materials or workmanship and is reported within one (1) week of delivery.
10. Damage or missing items to any display, open box, discounted, or refurbished product.
11. Products with original serial numbers that have been removed, altered, or can not be readily determined. Model and Serial numbers, along with original retail sales receipt, are required for warranty validation.
12. Increases in utility costs and additional utility expenses.
13. Replacement of light bulbs, filters, or any consumable parts.
14. Repairs when your product is used in other than normal and usual household use (e.g. commercial use, offices, and recreational facilities) or contrary to the instructions outlined in the product owner's manual.
15. Costs associated with removal of your product from your home for repairs.
16. The removal and reinstallation of the product if it is installed in an inaccessible location or is not installed in accordance with published installation instructions, including LG's owner's and installation manuals.
17. Shelves, door bins, drawers, handles, accessories, and other parts besides those that were originally included with this particular model.

The cost of repair or replacement under these excluded circumstances shall be borne by the consumer.

For complete warranty details and customer assistance, please call or visit our website: Call 1-888-542-2623 (24 hours a day, 365 days a year) and select the appropriate option from the menu, or visit our website at **www.lg.com**

Write your warranty information below:

Product Registration Information:

Model: _____
Serial Number: _____
Date of Purchase: _____



LG Customer Information Center

For inquiries or comments,
visit **www.lg.com** or call:

1-800-243-0000 USA, Consumer User

1-888-865-3026 USA, Commercial User

1-888-542-2623 CANADA

Register your product Online!

www.lg.com