Alpicool®
WE MAKE YOU FEEL COOL

USER MANUAL

Compact Car Refrigerator

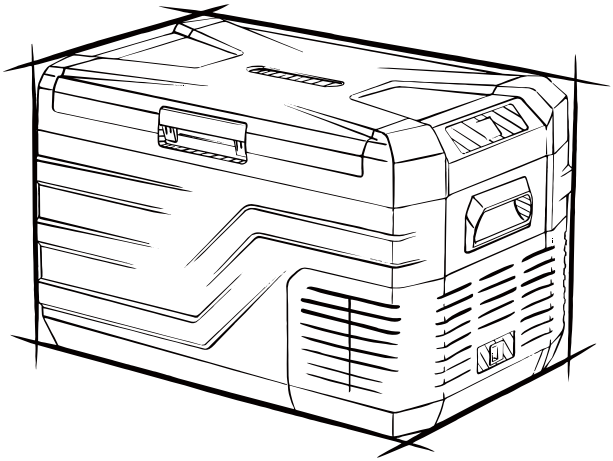

Model: NL30 / NL40 / NL50

Capacity: 28QT (26.8L) / 37QT (35.3L) / 46QT (43.6L)

Please read this manual carefully before use and keep it properly for further reference.

CONTENTS

1. SAFETY INSTRUCTIONS Page2

2. PREPARING BEFORE USE Page2

3. PRODUCT INTRODUCTION Page5

4. OPERATION INSTRUCTION Page7

5. BATTERY PROTECTION MODE Page8

6. CLEANING AND MAINTENANCE Page9

7. ERROR CODES PROBLEM AND TROUBLESHOOTING Page11

8. WARRANTY AND SERVICE Page12

9. SPECIFICATION Page13

1. SAFETY INSTRUCTIONS

WARNING!

- Do not operate the fridge if it is visibly damaged.
- Do not block the gaps of the fridge with things like pin, wire, etc.
- Do not expose the fridge to rain or soak it in water.
- Do not place the fridge near naked flames or other heat sources (heaters, direct sunlight, gas ovens etc.)
- Do not store any explosive substances like spray cans with a flammable propellant in the fridge.
- Before using the fridge, ensure the supply cord and plug is dry and not trapped or damaged.
- Do not locate multiple portable socket-outlets or portable power supplies at the rear of the fridge.
- Check the voltage specification on the type plate corresponds to that of the energy supply. The fridge is only to be used with the power supply unit provided.
- Before using the fridge, it must be left horizontal for more than 12 hours.
- Make sure that the fridge stays horizontally when it is running. The tilt angle must be less than 5° for long time running and be less than 45° for short time running.
- The fridge must be well-ventilated for heat dissipation and make sure to keep some space around it (Back Space 8 inches, Side Space 4 inches).
- Do not use mechanical devices or other means to accelerate the defrosting process, other than those recommended by the manufacturer.
- Do not damage the refrigerant circuit.
- Risk of child entrapment. Before you throw away your old refrigerator or freezer: take off the doors, leave the shelves in place so that children may not easily climb inside.

CAUTION!

- Repairs may only be carried out by qualified personnel. Incorrect repair may lead to safety hazards. If power cable is damaged, it must be replaced by the manufacturer or qualified persons.
- The installation of DC power in the boat must be handled by qualified electricians.
- The fridge can be used by children aged from 8 years and above and persons with reduced physical, sensory or mental capabilities or lack of experience and knowledge if they've been given supervision or instruction concerning use of the device in a safe way and understand the hazards.

NOTICE!

- Disconnect the power supply before each cleaning and maintenance and after every use.
- Cleaning and maintenance shall not be made by children without supervision.
- Food is suggested to be stored in its original packaging or in suitable containers.
- If the fridge is about to be left empty for long periods of time, switch off, defrost, clean, dry, and leave the door open to prevent mold developing within the compartment.



Please according to local regulations regarding disposal of the appliance for its flammable refrigerant and blowing gas.

2. PREPARING BEFORE USE

- Unpack and take out the fridge and accessories, and left it stay horizontal for 12hours.
- Before using it for the first time, clean the inside and outside of the car refrigerator with a damp cloth and leave the door open, wait until it gets dry.
- Place your refrigerator in a proper position which depends on your using scenario (car, truck, RV, camper, Van, Jeep, SUV, boat, home, etc.)
- According to your using scenarios, please choose the right power cord (AC cord or DC cord) for the right power supply.

3. PRODUCT INTRODUCTION

3.1 Package Content

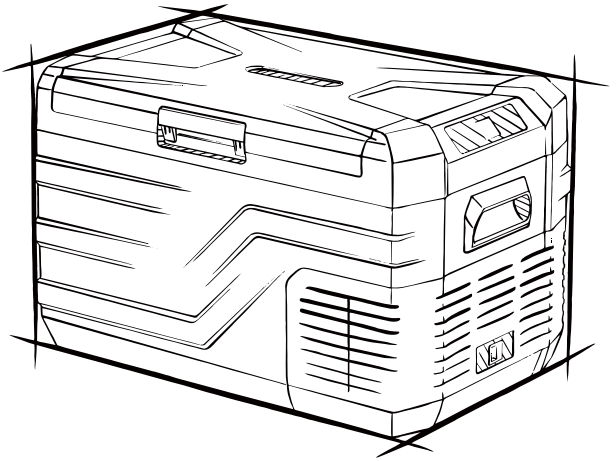

NL Series Compact Car Refrigerator



User Manual

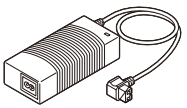

100/240V AC Power Adapter

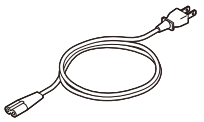

1.5m 12/24V AC Power Cord

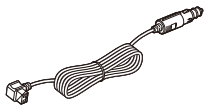

2.5m 12/24V DC Power Cord

3.2 Product Features

- High-efficiency and Powerful Compressor
- Fast cooling system from 77°F to -4°F(based on 25℃ / 77°F room temperature).
- Support DC 12/24V or AC 100~240V (using dedicated adapter) power supply.
- Featured with 3-level battery protection and temperature memory function.
- 45dB low noise and anti-tilt angle of 45 degrees
- USB charging port and interior LED light.

3.3 Product Size

NL30:

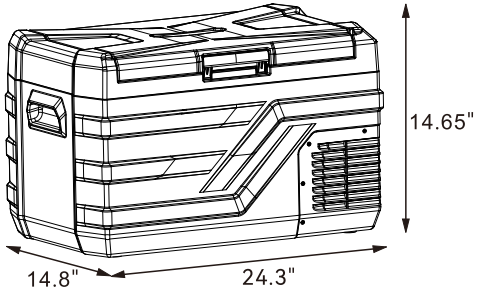

Internal size:

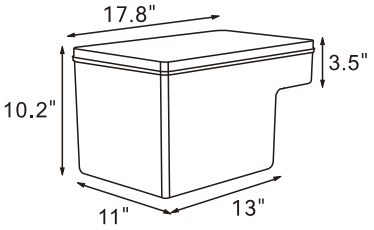

NL40:

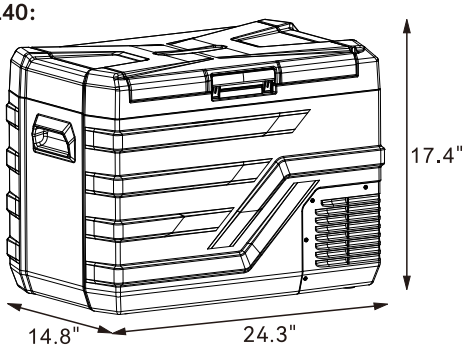

Internal size:

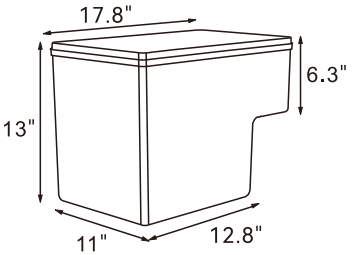

NL50:

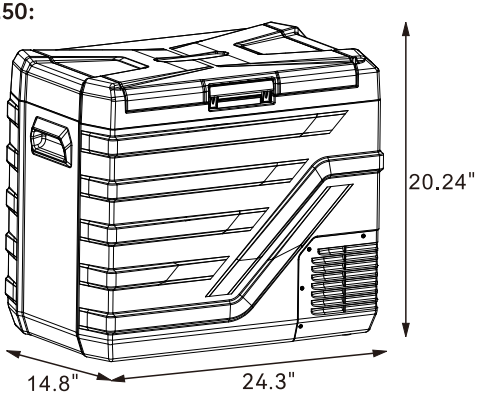

Internal size:

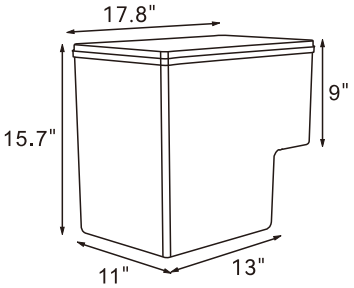

3.4 Product Structure

Model NL30:

① Door Latch
② Sealing Strip
③ Storage Room
④ Control Panel
⑤ Recessed Handle
⑥ Charging Port
⑦ Heat Dissipation Cover

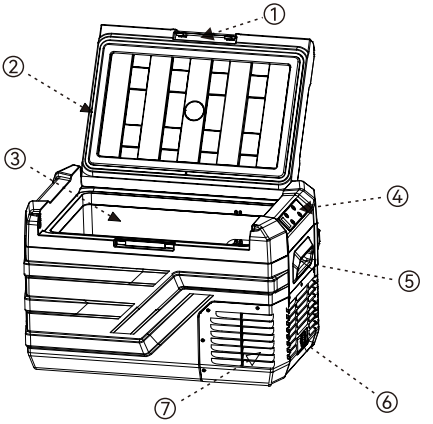

3.5 Door Opening Direction

The door can be taken off to change the opening direction, open the door at an angle of 45 degrees, and you can take it off easily. When installing it back, align the door shaft with the compartment hole and then insert it.

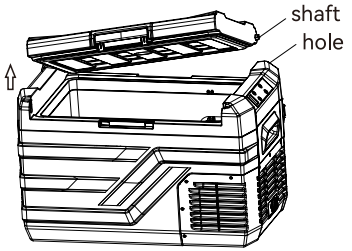

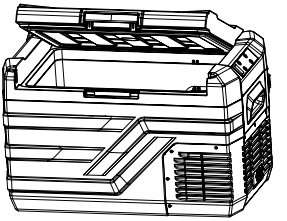

4. OPERATION INSTRUCTION

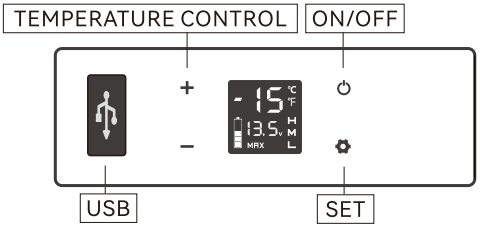

4.1 Power Supply

Connect to 12/24V DC power (use in car, truck, RV or power station)
Connect to 100~240V AC power (use a home outlet or AC outlet of power station)

4.2 Display Screen Initialization

Once powered on, all symbols in display will light up for 1 second and then be switched to power ON status.

4.3 Power ON / OFF

Press ⏻ to turn ON or turn OFF the fridge. Once the fridge is running, the LED display will light up all the time.

4.4 Temperature Setting

Press ⊕ or ⊖ to adjust the temperature, keep pressing ⊕ or ⊖ to adjust the temperature quickly. The setting will be saved automatically after stopping operating for 3 seconds.
Temperature range: -4~68°F (-20~20℃)
Note: The screen displays the current temperature inside the fridge, not the setting temperature.

4.5 Temperature Unit Switch

Turn OFF the fridge, long press ⚙ for 3 seconds until displays E1, and short press ⚙ to switch to E5, then press ⊕ or ⊖ to switch Celsius or Fahrenheit. (*Factory setting is Fahrenheit)

4.6 MAX / ECO Mode

In working status, press ⚙ to switch MAX mode or ECO mode. (*Factory setting is MAX)
MAX: Fast cooling ECO: Energy-saving cooling

4.7 Memory Function

There is a power-off memory function for the car refrigerators. When the power is lost, working state (On/Off status, working mode, etc.) before power-off can be automatically recovered at the next startup, no need to set it again.

4.8 Restore Factory Setting

Turn OFF the fridge, long press ⚙ for 3 seconds until the screen displays E1, under E1 mode, long press ⊕ and ⊖ at the same time for 3 seconds to reset the fridge.

Recommended Temperature for Common Food:

				
Meat	Frozen Food	Sea food	Vegetables	Cooked Food
-18℃/0℉	-18℃/0℉	-3℃/26℉	3~10℃ /37~50℉	4℃/39℉

				
Water	Canned Drinks	Fruits	Soft Drinks	Alcoholic Drinks
5℃/41℉	5℃/41℉	5~8℃/41~46℉	8~10℃/46~50℉	13℃/55℉

5. BATTERY PROTECTION MODE

Built-in smart electronic control module can automatically monitor car battery voltage. The refrigerator will be automatically shut down when the power is excessively consumed, so that protecting the vehicle from extra battery consumption to affect auto ignition.

When set to "High", the battery monitor will provide maximum protection for the battery running the refrigerator against excessive / full discharge.

When set to "Low", the battery monitor will allow the refrigerator to use more of the battery energy.

INPUT / MODE	Factory Setting is H (High)			
	DC 12V		DC 24V	
	CUT OUT	CUT IN	CUT OUT	CUT IN
L	8.5V	10.9V	21.3V	22.7V
M	10.1V	11.4V	22.3V	23.7V
H	11.1V	12.4V	24.3V	25.7V

*The voltage is theoretical value, it could be a deviation from different using scenarios.
* H should be set when the product is connected to car power, and M or L should be set when it is connected to a portable battery or other back-up battery.
NOTE: When the refrigerator is running, "OFF" or "ON" is the stop or start of the compressor.

• **Battery Protection Levels:** H (High)→M (Medium)→L (Low)
Under running status, long press ⚙ for 3 seconds to enter the battery protection setting. The screen will flash, and Press ⚙ again to select battery protection mode from H (High), M (Medium), L (Low) levels in turns.

• **Displayed in the panel at this location:**

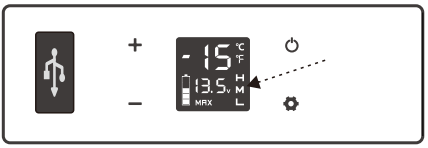

If no operations were detected, the set level will flash for 3 seconds, then exit and save the current setting.

6. CLEANING AND MAINTENANCE

■Cleaning:

- Unplug the fridge first to avoid electric shock.
- Use a wet cloth to clean the fridge and dry it.
- Do not soak the fridge in water and do not wash it directly.
- Do not use abrasive cleaning agents as these can damage the fridge.

■Storage:

If the fridge will not be in use for a long time, please follow the steps:

- Turn off the power and remove the plug.
- Take out all the items that stored in the fridge.
- Wipe off excess water with a soft rag.
- Leave the lid slightly open to prevent odors from forming.
- Put the fridge in a cool and dry place.
- Recommended storage environment:
  Ambient temperature: 77°F (25℃), ambient humidity: ≤ 75%.

■Defrosting:

Humidity can form frost in the interior of the cooling fridge or on the evaporator, which will affect the cooling performance. Defrost the device regularly to avoid this.

- Switch off the device.
- Take out the contents of the device.
- Keep the lid open.
- Remove the drain from the hole.
- Wipe off the defrosted water.

Never use hard or sharp tools to remove ice or to loosen objects which have frozen in place.

7. ERROR CODES PROBLEM AND TROUBLESHOOTING

If there is an unusual problem that cannot be resolved through simple fault analysis, please consult professional customer service with your order number for assistance: Here is our email address: **service@alpicool.com.**

Note: In order to resolve the issue, you had better attach more details as follows in your email.

1. The order number.
2. If possible, pictures or videos to show the problem.
3. How do you connect with the fridge? And what is the power source?
4. Is there any error code show on the display?
5. Your name and shipping address, for shipping the part replacement.

Troubles	Causes and Solutions
Refrigerator Does Not Work	• Check if the power is connected properly. (check if the plug is loosened or positive and negative poles are reversed) • Check if the power switch on the operation panel is turned on. • Check if the cooling ventilation is normal. • Check if the fuse is blown.
Poor Cooling Performance	• Check if the lid is closed properly. • Check if the door seal is damaged or deformed. • Check if there is poor ventilation around the fridges. • Check if the temperature is set properly.
Abnormal Noise	• Refrigerator is not put on a fat level surface. • Check for vibrations in surrounding objects. • Parts in the refrigerator get loose or fall off.
Water-flow Sound	• It's caused by the flow of refrigerant, it happens when the first time of using the fridge or adjust it to a low temperature setting, it will disappear when the fridge cool down.
Refrigerator Condensation	• It's a normal phenomenon, the moisture will condense to water when it touches a cold surface of the refrigerator.

Definition Of Error Codes On The Display

Error Code	Error Type	Solutions
F1	Low Input Voltage	• Failure 1: Insert refrigerator power cord into the cigarette lighter before the car starts. Solution 1: Wait for a while to connect to the car after it started. • Failure 2: Input voltage of the adapter is too low. Solution 2: Adjust the battery protection level to middle-voltage or low-voltage. If it doesn't work, please replace a new adapter.
F2	Fan Issue	• Solution 1: Take off the shelf and check if the wire of the fan is loosen. • Solution 2: Replace a new fan. Please contact customer service for instruction.
F3	Input Voltage Fault Due To Compressor Frequently Starting	• When the refrigerator is used in car and F3 appears ①Please shut down for 5 minutes and restart it. ②If it doesn't work, that can be identified to be F1 fault, please solve it according to the solution of F1. • When the refrigerator is connecting with adapter and F3 appearing ①Please adjust battery protection level to the middle level or low level. ②If it doesn't work, please replace a new adapter.
F4	Low Rotational Speed of Compressor	• Please turn off and unplug the fridge for 1 hour, and reboot the fridge.
F5	Overheating of Compressor or Electric Board	• Please turn off and unplug the fridge for 1 hour, then take the fridge to a well-ventilated environment and reboot the fridge. • Please make sure that the ventilation area is not blocked and leave it at least 8 inches space for the fridge.
F6	Malfunction of Module Hardware	• Please restore it to factory setting and reboot the fridge after 1 hour. If F6 still remains, please contact customer service for help.
F7 & F8	Open or Short Circuit of NTC	• Need to replace sensor module, please contact customer service for help.

8. WARRANTY AND SERVICE

Warranty:

Alpicool Outdoors Portable Car Refrigerator provides a 3-year warranty for the compressor and 1-year warranty for all other accessories. It commences from the date of purchase on any OFFICIAL ALPICOOL authorized platforms, such as Amazon, Walmart, HomeDepot etc., except the following situations:

- Contrived damage.
- Damage caused by force majeure such as earthquake, conflagration, etc.
- Damage from inappropriate use or violating this instruction.
- Damage or malfunction caused by disassembling.

36-month limited warranty
Lifetime technical support

Customer Service:

If there is any problem with the operation or use of the product, please feel free to contact us via:

- Amazon and other platforms:

service@alpicool.com
Reply within 48 hours

+1 541 829 1937
4PM - 23PM (UTC-8) Sunday - Thursday

9. SPECIFICATION

Model	NL30	NL40	NL50
Rated Voltage	DC 12 / 24V OR AC 100~240V (USING DEDICATED ADAPTER)		
Rated Power	60W		
Total Capacity	28QT / 26.8L	37QT / 35.3L	46QT / 43.6L
Noise	≤45dB		
Temperature Range	-4~68°F (-20~20°C)		
Climate Category	T / ST / N		
Dimension (L*W*H)	24.3 x 14.8 x 14.65 in	24.3 x 14.8 x 17.40 in	24.3 x 14.8 x 20.24 in
Net Weight	25.6 LB / 11.6 KG	28 LB / 12.7 KG	28.7 LB / 13 KG

*Due to product improvement, the technical information might be different from the actual information, please refer to the rating label on the product.

Disposal:

Place the packaging material in the appropriate recycling waste bins wherever possible.



If you want to eventually dispose of the product, ask your local recycling center or specialty distributor for details on how to do so in accordance with the applicable disposal regulations.

Explore More from Alpicool

@Alpicool Outdoors

@Alpicool Outdoors

@Alpicool_Outdoors