Use & Care Guide

Manual de uso y cuidado

English / Spanish

Kenmore®

Top Mount Refrigerator

Refrigerador-Congelador Superior

Model: 111.6121*, 6120*, 7121*

* = color number

P/N 3013540310

Sears Brands Management Corporation
Hoffman Estates, IL, U.S.A. 60179

www.kenmore.com

Kenmore®

TABLE OF CONTENTS

PRODUCT RECORD 3

WARRANTY 4

REFRIGERATOR SAFETY 5-6

Proper Disposal of Your Old Refrigerator 6

INSTALLATION INSTRUCTIONS 7

Unpack the Refrigerator 7

Location Requirements 8

Electrical Requirements 8

Parts and Features 9

Water Supply Requirements 10

Connect the Water Supply 10

Connect to Refrigerator 11

Complete the Installation 12

Front Base Grille Installation 13

Reverse Doors 13-14

Handles Installation 15

Adjust the Doors 16

REFRIGERATOR USE 17

Using the Controls 17

Icemaker 18

REFRIGERATOR FEATURES 19

Refrigerator Shelves 19

Deli Drawer 19

Crisper 20

FREEZER FEATURES 21

DOOR FEATURES 22

Door Bins 22

Dairy Compartment 22

FOOD STORAGE GUIDE 23

Fresh Freezer Food Storage 23

REFRIGERATOR CARE 24

Cleaning 24

To Clean Your Refrigerator 24

Vacation and Moving Care 25

TROUBLESHOOTING GUIDE 26

SERVICE NUMBER ..... BACK COVER

PRODUCT RECORD

In the space below, record the date of purchase, model and serial number of your product. You will find the model and serial number printed on an identification label located on the interior liner of the refrigerator compartment. Have these items of information available whenever you contact Sears concerning your product.

Model No._____ Date of Purchase _____

Serial No._____

Save these instructions and attach your sales receipt for future reference.

REFRIGERATOR WARRANTY

KENMORE LIMITED WARRANTY

FOR ONE YEAR from the date of sale this appliance is warranted against defects in material or workmanship when it is correctly installed, operated and maintained according to all supplied instructions.
WITH PROOF OF SALE, a defective appliance will receive free repair or replacement at option of seller.
For warranty coverage details to obtain free repair or replacement, visit the web page: www.kenmore.com/warranty
This warranty applies for only 90 DAYS if this appliance is ever used for other than private household purposes.

This warranty covers ONLY defects in material and workmanship, and will NOT pay for:

1. Expendable items that can wear out from normal use, including but not limited to filters, belts, bags or screw-in base light bulbs.
2. A service technician to clean or maintain this appliance, or to instruct the user in correct appliance installation, operation and maintenance.
3. Service calls to correct appliance installation not performed by Sears authorized service agents, or to repair problems with house fuses, circuit breakers, house wiring, and plumbing or gas supply systems resulting from such installation.
4. Damage to or failure of this appliance resulting from installation not performed by Sears authorized service agents, including installation that was not in accord with electrical, gas or plumbing codes.
5. Damage to or failure of this appliance, including discoloration or surface rust, if it is not correctly operated and maintained according to all supplied instructions.
6. Damage to or failure of this appliance, including discoloration or surface rust, resulting from accident, alteration, abuse, misuse or use for other than its intended purpose.
7. Damage to or failure of this appliance, including discoloration or surface rust, caused by the use of detergents, cleaners, chemicals or utensils other than those recommended in all instructions supplied with the product.
8. Damage to or failure of parts or systems resulting from unauthorized modifications made to this appliance.
9. Service to an appliance if the model and serial plate is missing, altered, or cannot easily be determined to have the appropriate certification logo.

Disclaimer of implied warranties; limitation of remedies
Customer's sole and exclusive remedy under this limited warranty shall be product repair or replacement as provided herein. Implied warranties, including warranties of merchantability or fitness for a particular purpose, are limited to one year or the shortest period allowed by law. Seller shall not be liable for incidental or consequential damages. Some states do not allow the exclusion or limitation of incidental or consequential damages, or limitation on the duration of implied warranties of merchantability or fitness, so these exclusions or limitations may not apply to you.

This warranty applies only while this appliance is used in the United States.

This warranty gives you specific legal rights, and you may also have other rights which vary from state to state.

Sears Brands Management Corporation, Hoffman Estates, IL 60179

REFRIGERATOR SAFETY

Your safety and the safety of others are very important.

We have provided many important safety messages in this manual and on your appliance. Always read and obey all safety messages.



This is the safety alert symbol.
This symbol alerts you to potential hazards that can kill or hurt you and others.

All safety messages will follow the safety alert symbol and either the word "DANGER" or "WARNING." These words mean:

⚠ DANGER You can be killed or seriously injured if you don't immediately follow instructions.

⚠ WARNING You can be killed or seriously injured if you don't follow instructions.

All safety messages will tell you what the potential hazard is, tell you how to reduce the chance of injury, and tell you what can happen if the instructions are not followed.

IMPORTANT SAFETY INSTRUCTIONS

WARNING: To reduce the risk of fire, electric shock, or injury to persons when using the refrigerator, follow basic precautions, including the following:

- Plug into a grounded 3 prong outlet.
- Do not remove ground prong.
- Do not modify plug on power cord. If plug does not fit electrical outlet, have proper outlet installed by a qualified electrician.
- Do not use a two-prong adapter, extension cord or power strip.
- Do not service or replace any part of refrigerator unless specifically recommended in Use & Care Guide or published user-repair instructions. Do not attempt service if instructions are not under-stood or if they are beyond personal skill level.
- Always disconnect refrigerator from electrical supply before attempting any service.
- Disconnect power cord by grasping the plug, not the cord.
- Install refrigerator according to Installation Instructions. All connections for water, electrical power and grounding must comply with local codes and be made by licensed personnel when required.
- Keep your refrigerator in good condition. Bumping or dropping refrigerator can damage refrigerator or cause refrigerator to malfunction or leak. If damage occurs, have refrigerator checked by qualified service technician.
- Replace worn power cords and/or loose plugs.
- Always read and follow manufacturer's storage and ideal environment instructions for items being stored in refrigerator.
- Your refrigerator should not be operated in the presence of explosive fumes.
- Remove doors from your old refrigerator.
- Children should not climb, hang or stand on any part of the refrigerator.
- Clean up spills or water leakage associated with water installation.
- Use nonflammable cleaner.
- Keep flammable materials and vapors, such as gasoline, away from refrigerator.
- Use two or more people to move and install refrigerator.
- Disconnect power before installing icemaker (on icemaker kit ready models only).

SAVE THESE INSTRUCTIONS

SPECIFICATIONS

MODELS		7121*, 6121 *, 6120*
EXTERNAL DIMENSIONS	WIDTH	32.9 in
	BACKGROUND	32.0 in
	HIGH	66.7 in
NET WEIGHT		220.5 Lbs
SYSTEM CARACTERISTICS	FREEZER CAPACITY	5.8 cu ft
	FRESH FOOD CAPACITY	15.0 cu ft
	TOTAL CAPACITY	20.8 cu ft
	COOLING SYSTEM	FORCED CONVECTION
	DEFROST SYSTEM	BY RESISTENCE, TYPE SHEATH
		AUTOMATIC
	REFRIGERANT	R134a
	SUPPLY VOLTAGE	115V-127V/60Hz

Proper Disposal of Your Old Refrigerator

⚠ DANGER

Child Entrapment and Suffocation Hazard

Remove doors from your old refrigerator.
Failure to do so can result severe injury or death.

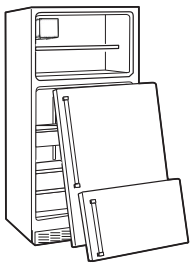

Before You Throw Away Your old refrigerador or freezer:

- Take off the doors.
- Leave the shelves in place so that children may not easily climb inside.

Junked or abandoned refrigerators are still dangerous – even if they will sit for "just a few days." If you are getting rid of your old refrigerator, please follow these instructions to help prevent accidents.

Important information to know about disposal of refrigerants:
Dispose of refrigerator in accordance with Federal and Local regulations. Refrigerants must be evacuated by a licensed, EPA certified refrigerant technician in accordance with established procedures.

⚠ WARNING

STATE OF CALIFORNIA
PROPOSITION 65 WARNINGS

The California Safe Drinking Water and Toxic Enforcement Act requires the Governor of California to publish a list of substances known to the State of California to cause cancer. birth defects. or other reproductive harm, and requires businesses to warn of potential exposure to such substances.
This product contains a chemical known to the State of California to cause cancer. birth defects, or other reproductive harm. This appliance can cause low-level exposure to some of the substances listed, including benzene, formaldehyde. And carbon monoxide.

INSTALLATION INSTRUCTIONS

Unpack the Refrigerator

⚠ WARNING

Excessive Weight Hazard

Use two or more people to move and install refrigerator.
Failure to do so can result in back or other injury.

Remove the Packaging

- Remove tape and glue residue from surfaces before turning on the refrigerator. Rub a small amount of liquid dish soap over the adhesive with your fingers. Wipe with warm water and dry.

  NOTE: Do not use sharp instruments, rubbing alcohol, flammable fluids, or abrasive cleaners to remove tape or glue. These products can damage the surface of your refrigerator. For more information, see "Refrigerator Safety."

- Dispose of/recycle all packaging materials.

Important: Do not remove the white foam air return insert that is located behind the control panel on the ceiling of the refrigerator (on some models). The insert is part of the refrigerator and not part of the packing material. If the insert is removed, ice may migrate down from the freezer and cause icicles to form.

When Moving Your Refrigerator:
Your refrigerator is heavy. When moving the refrigerator for cleaning or service, be sure to cover the floor with cardboard or hardboard to avoid floor damage. Always pull the refrigerator straight out when moving it. Do not wiggle or "walk" the refrigerator when trying to move it, as floor damage could occur.

Clean Before Using

- After you remove all of the package materials, clean the inside of your refrigerator before using it. See the cleaning instructions in "Refrigerator Care."

  Important information to know about glass shelves and covers:
  Do not clean glass shelves or covers with warm water when they are cold. Shelves and covers may break if exposed to sudden temperature changes or impact, such as bumping. Tempered glass is designed to shatter into many small, pebble-size pieces. This is normal. Glass shelves and covers are heavy. Use both hands when removing them to avoid dropping.

INSTALLATION INSTRUCTIONS

Location Requirements

⚠ WARNING



Explosion Hazard

Keep flammable materials and vapors, such as gasoline, away from refrigerator.
Failure to do so can result in death, explosion, or fire.

Important: This refrigerator is designed for indoor household use only.
To ensure proper ventilation for your refrigerator, allow for 2" (5.08 cm) of space on each side and at the top. Allow for 2" (5.08 cm) of space behind the refrigerator. If your refrigerator has an icemaker, allow extra space at the back for the water line connections. When installing your refrigerator next to a fixed wall, leave a 2" (5.08 cm) minimum space on the hinge side (some models require more) to allow the door to swing open.

NOTE: This refrigerator is intended for use in a location where the temperature ranges from a minimum of 39°F (4°C) to a maximum of 110°F (43°C). The preferred room temperature range for optimum performance, which reduces electricity usage and provides superior cooling, is between 60°F (15°C) and 90°F (32°C). It is recommended that you do not install the refrigerator near a heat source, such as an oven or radiator.
Use caution when installing the unit on vinyl or hardwood floors so as not to mark or otherwise damage the flooring. Apiece of plywood, a rug or other material should be used to protect the floor while positioning the unit.

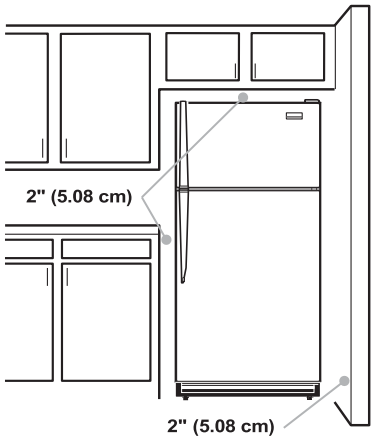

Electrical Requirements

⚠ WARNING



Electrical Shock Hazard

Plug into a grounded 3 prong outlet.
Do not remove ground prong. Do not use an adapter.
Do not use an extension cord.
Failure to follow these instructions can result in death, fire, or electrical shock.

Before you move your refrigerator into its final location, it is important to make sure you have the proper electrical connection.

Recommended grounding Method
A 115 volt, 60 Hz, AC only, 15- or 20-amp fused, grounded electrical supply is required. It is recommended that a separate circuit serving only your refrigerator be provided. Use an outlet that cannot be turned off by a switch. Do not use an extension cord.

NOTE: Before performing any type of installation or cleaning, disconnect the refrigerator from the electrical source. When you are finished, reconnect the refrigerator to the electrical source.

PARTS AND FEATURES

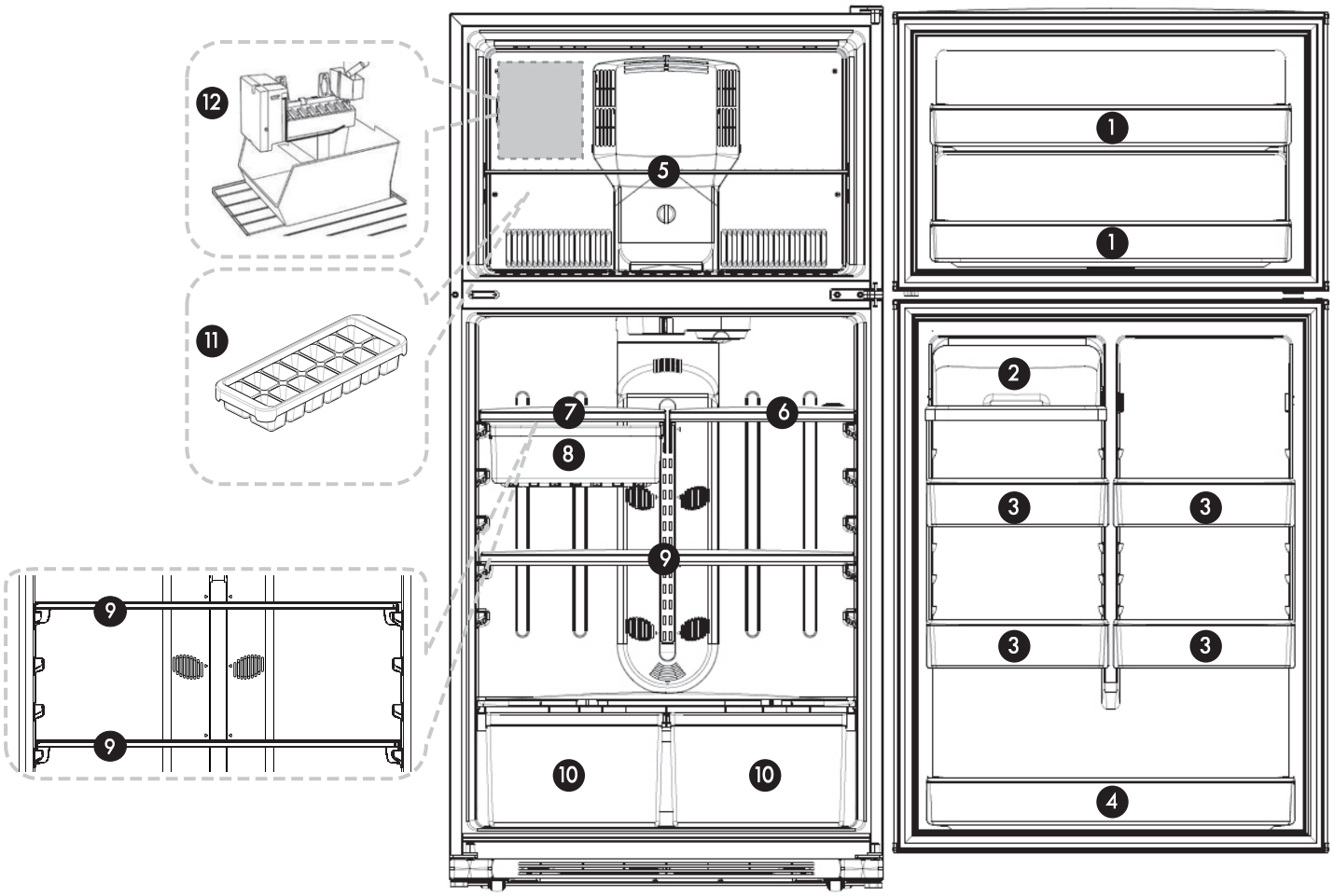

*This instruction manual refers to several models. Features may vary according to model.

1. Freezer door bin
2. Dairy compartment
   for spreadable food items such as butter or margarine.
3. Adjustable half width door bin
4. Full width door bin
5. Adjustable wire shelf
6. Adjustable half width shelf
7. Adjustable half width shelf
   with deli drawer
8. Deli drawer
9. Adjustable full width shelf
10. Humidity controlled crisper drawer
    for storage of fruits and vegetables
11. Ice tray (optional)
12. Ice maker / Ice storage bin (optional)

Water Supply Requirements(optional)

This water line installation is not warranted by the refrigerator or icemaker manufacturer. Follow these instructions carefully to minimize the risk of expensive water damage.
Gather the required tools and parts before starting installation. Read and follow the instructions provided with any tools listed here.

Tools Needed:

- ¼" outer diameter refrigerator copper tubing kit
- Flat-blade screwdriver
- ½" open-end wrenches or adjustable wrench
- Two ¼" outer diameter compression nuts and 2 sleeves
- Power drill and drill bit

Important:
- If you turn the refrigerator on before the water line is connected, turn the icemaker OFF.
- All installations must meet local plumbing code requirements.
- Use copper tubing and check for leaks. Install copper tubing only in areas where the household temperatures will remain above freezing.
- To prevent burns and product damage, do not hook up the water line to the hot water line.
- When using any electrical device (such as a power drill) during installation, be sure the device is double insulated or grounded in a manner to prevent the hazard of electric shock, or is battery powered.

Note: If your existing copper water line has a flared fitting at the end, you will need an adapter (available at plumbing supply stores) to connect the water line to the refrigerator OR you can cut off the flared fitting with a tube cutter and then use a compression fitting.
Shutoff valve to connect to the cold water line.
The shutoff valve should have a water inlet with a minimum inside diameter of 5/32"(3.97 mm) at the point of connection to the cold water line. Saddle-type shutoff valves are included in many water supply kits. Before purchasing, make sure a saddle-type va lve complies with your local plumbing codes.
Install the shutoff valve on the nearest frequently used drinking water line.

Water Pressure

Important: A cold water supply with water pressure between 30 and 120 psi (207 and 827 kPa) is required to operate the icemaker.

NOTE: If the water pressure is less than what is required, ice cubes could be hollow or irregular shaped.
If you have questions about your water pressure, call a licensed, qualified plumber.

Reverse osmosis water Supply

If a reverse osmosis water filtration system is connected to your cold water supply, the water pressure to the reverse osmosis system needs to be a minimum of 40 to 60 psi (276 to 414 kPa). If the icemaker is still not operating properly:

- Check to see whether the sediment filter in the reverse osmosis system is blocked. Replace the filter if necessary.

- Allow the storage tank on the reverse osmosis system to refill after heavy usage.

Connect the Water Supply(optional)

Read all directions before you begin.

Important: If you turn the refrigerator on before the water line is connected, turn the icemaker OFF.

Connect to Water Line

1. Unplug refrigerator or disconnect power.

2. Turn OFF main water supply. Turn ON nearest faucet long enough to clear line of water.

3. Locate a ½" to 1 ¼" (1.25 cm to 3.18 cm) vertical cold water pipe near the refrigerator.

   Important:
   - Make sure it is a cold water pipe.
   - Horizontal pipe will work, but drill on the top side of the pipe, not the bottom. This will help keep water away from the drill and normal sediment from collecting in the valve.

4. Determine the length of copper tubing you need. Measure from the connection on the lower left rear of refrigerator to the water pipe. Add 8 ft (2.4 m) to allow for cleaning. Use ¼" (6.35 mm) O.D. (outside diameter) copper tubing. Be sure both ends of copper tubing are cut square.

Connect the Water Supply (continued)

5. Drill a ¼" hole in the cold water pipe (even if using a self-piercing valve), using a sharp bit. Remove any burrs resulting from drilling the hole in the pipe. Take care not to allow water to drain into the drill. Failure to drill a ¼" hole may result in reduced ice production or smaller cubes.

6. Fasten the shutoff valve to the cold water pipe with the pipe clamp. Be sure the outlet end is solidly in the ¼" drilled hole in the water pipe and that the washer is under the pipe clamp. Tighten the packing nut. Tighten the pipe clamp screws slowly and evenly so washer makes a watertight seal. Do not overtighten or you may crush the copper tubing.

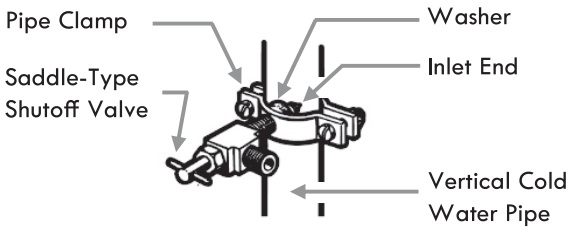

7. Place the compression nut and sleeve for copper tubing onto the end of the tubing and connect it to the shutoff valve. Make sure the tubing is fully inserted into the valve. Tighten the compression nut securely.
For plastic tubing, insert the molded end of the tubing into the shutoff valve and tighten compression nut until it is hand-tight; then tighten one additional turn with a wrench. Overtightening may cause leaks.

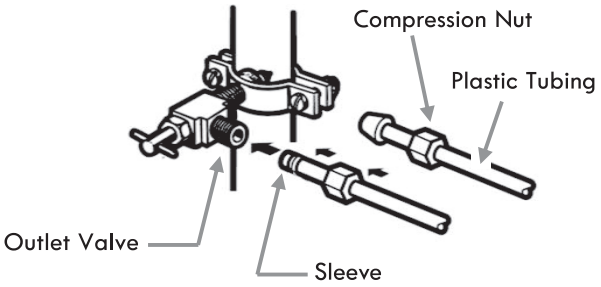

8. Place the free end of the tubing in a container or sink, and turn ON the main water supply. Flush the tubing until water is clear. Turn OFF the shutoff valve on the water pipe. Coil the copper tubing.

Connect to Refrigerator

1. Unplug refrigerator or disconnect power.

2. Remove the screws holding the compressor compartment access cover to the back of the refrigerator case. Remove the cover and the plastic flexible cap from the water valve (refrigerator connection)

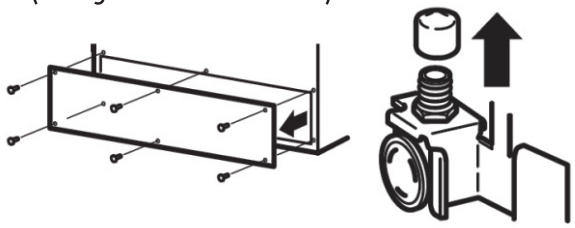

NOTE: Be sure to save the screws as the access cover must be reinstalled later to ensure your refrigerator will function properly.

3. Place the compression nut and sleeve onto the end of the tubing as shown. Insert the end of the tubing into the water valve connection as far as possible. While holding the tubing, tighten the fitting.
For plastic tubing, insert the molded end of the tubing into the water valve connection and tighten compression nut until it is hand-tight; then tighten one additional turn with a wrench. Overtightening may cause leaks.

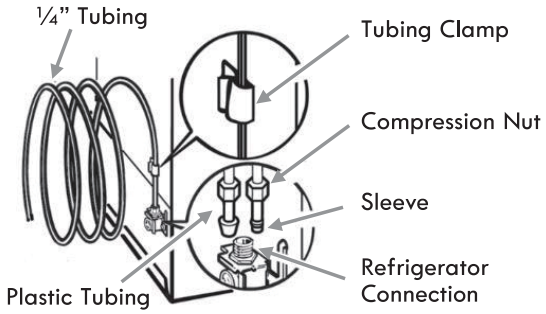

4. Use the tube clamp on the back of the refrigerator to secure the tubing to the refrigerator as shown. This will help avoid damage to the tubing when the refrigerator is pushed back against the wall.

5. Turn shuoff valve ON.
Reattach the access cover.

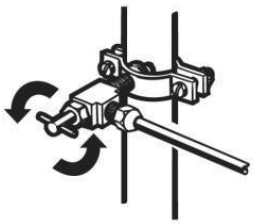

6. Check for leaks. Tighten any connections (including connections at the valve) or nuts that leak.

7. The icemaker is equipped with a built-in water strainer. If your water conditions require a second water strainer, install it in the ¼" (6.35 mm) water line at either tube connection. Obtain a water strainer from your nearest appliance dealer.

Complete the Installation

⚠ WARNING



Electrical Shock Hazard

Plug into a grounded 3 prong outlet.

Do not remove ground prong. Do not use an adapter.

Do not use an extension cord.

Failure to follow these instructions can result in death, fire, or electrical shock.

1. Plug into a grounded 3 prong outlet.
2. Start the icemaker. Move the feeler arm to the ON (down) position. The icemaker will not begin to operate until it reaches its operating temperature of 15°F (-9°C) or below. It will then begin operation automatically.

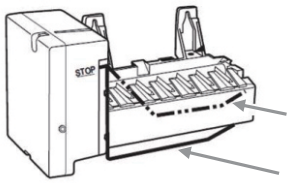

Feeler arm in the STOP (up) position.

Feeler arm in the ON (down) position.

NOTE: Allow 24 hours to produce the first batch of ice. Discard the first three batches of ice produced. Allow 3 days to completely fill ice container.
In lower water pressure conditions, the water valve may turn on up to 3times to deliver enough water to the icemaker.

Front Base Grille

The front base grille which was packaged inside the refrigerator for shipment and should be installed after the refrigerator has been leveled.

1. Align the base grille to the screw holes.
   (The cut out side on the base grille installs around the lower hinge of the door.)
2. Secure the base grille into screw holes with Phillips screwdriver.

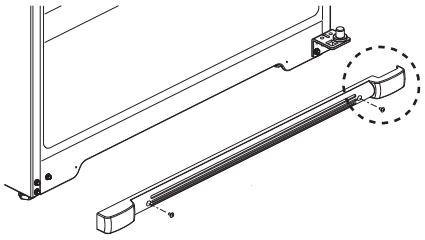

NOTE: Reverse these steps to remove this style of base grille.

Reverse Doors (optional)

Important: If you want to reverse your doors so that they open in the opposite direction, follow these steps.

Tools r equired: 5/16 " end wrench, Phillips screwdriver, Putty knife, 5/16 " socket and ratchet

Unplug the refrigerator

1. Tape the freezer door shut with masking tape. Pry off hinge cap with a flat blade screwdriver and set aside.
2. With a 5/16 " socket and ratchet, remove screws from the top hinge and set aside.
3. Remove the tape and carefully lift and remove freezer door (including the top hinge) off the center hinge.
4. With a Phillips screwdriver, remove the door stop from the underside of the freezer door and secure it on the opposite side.
5. With a putty knife, carefully pry out the hinge hole plug from the top of the freezer door and install it on the other side.
6. Remove the screw hole plug from top of cabinet and install it on the opposite side.

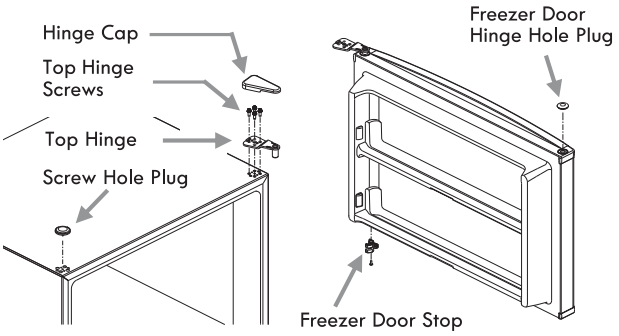

NOTE:
- Do not misplace the top hinge screws.
- Set the door on a non-scratching surface with the inside up.
- Do not let door to drop to the floor when setting it down, or the door stop could be damaged.

7. Tape the refrigerator door shut with masking tape.With a 5/16 " socket and ratchet, remove the middle hinge screws and middle hinge from the top of refrigerator door. Using a flat blade screwdriver, pry out the dome cap and the middle hinge hole cover. And then install them on the opposite side.

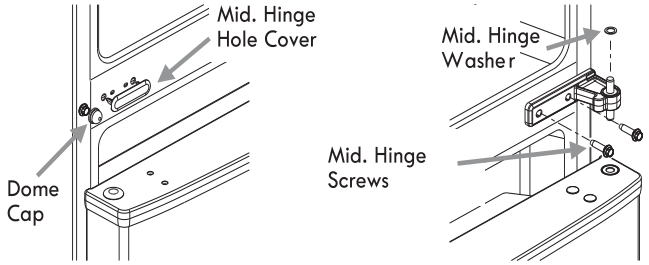

NOTE: Do not misplace the middle hinge screws and the middle hinge washer. If the washer is not on the hinge, check to see if it is stuck to the bottom of the door.

8. Remove the tape and carefully lift and remove refrigerator door.
9. Remove front base grille and set aside.
10. With a 5/16 " socket and ratchet, remove the bottom hinge plate from lower corner of refrigerator and secure it on the opposite side
11. Remove the washer and shaft from the inside of the hinge plate and install them on the outside of the hinge plate.

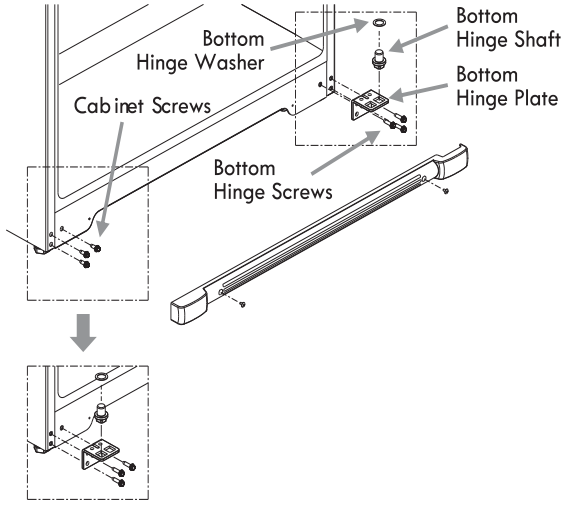

NOTE:
- Do not misplace the bottom hinge screws, cabinet screws and bottom hinge washer.I f the washer is not on the hinge, check to see if the it is stuck to the bottom of the door.
- Set the door on a non-scratching surface with the inside up.
- Do not let door to drop to the floor when setting it down, or the door stop could be damaged.

Reverse Doors (optional) (continued)

12. Remove the refrigerator door stop from the underside of refrigerator door and secure it on the opposite side with a Phillips screwdriver.

13. With a screwdriver, pry out the plugs from the top of refrigerator door and replace them on the opposite side.

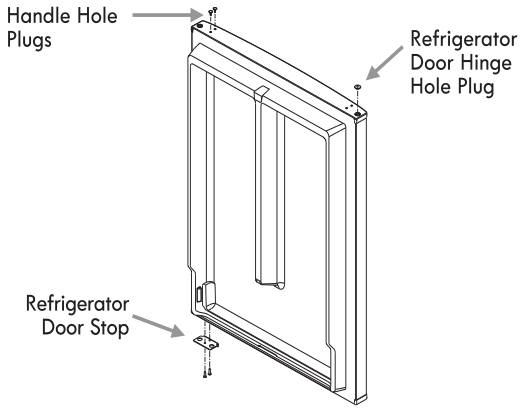

14. Remove the gaskets from freezer and refrigerator door. And then rotate them 180 degrees. Reassemble them by pushing from bottom to top.

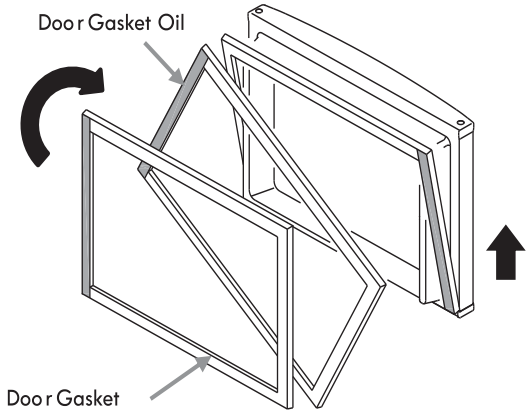

NOTE: The oil on the gasket is normal. There is no need to clean the oil. It helps to prevent deformation of the hinge side of gasket. If more oil is needed, use Vaseline.

15. Carefully place refrigerator door onto the hinge plate in lower corner. Ensure that the washer is in place on top of the hinge shaft.

16. Attach the middle hinge with the screws removed from the opposite side and secure them using a 5/16" wrench.

17. Use foam door spacer to set the correct gap between the freezer and refrigerator door. Place spacer between the doors when tightening the freezer door top hinge.

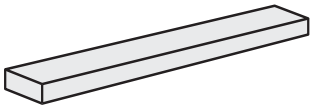

NOTE: You may need to use the spacer again to set gap. Ensure the washer is in place on top of the hinge shaft.

18. Slide top hinge into place on freezer door and secure screws with 5/16 " wrench. Confirm that all screws have been tightened securely.

19. Snap hinge cap securely in place.

20. Replace front base grille. Remember to plug in your refrigerator and reset the controls to the appropriate setting(s).

Handle Installation

Important: Handles are labeled F (freezer) and R (refrigerator) for typical setup of right swinging doors. The handles can be reversed for the setup of left swinging doors. Figure 1 shows the installation orientation of the handles for right and left swing doors.

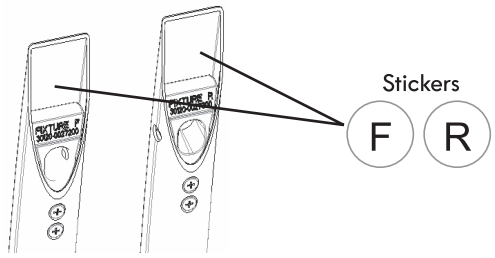

NOTE: Before installation, select the proper handle by reading the sticker located here.

Tools required: Phillips screwdriver

Included Parts: Hex Wrench(A), Two Standoff Screws (B), Four Handle Screws (C)

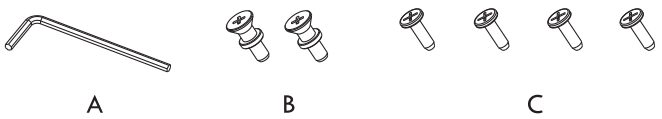

For the installation of the handles, see Figure 1 (below) for correct orientation.

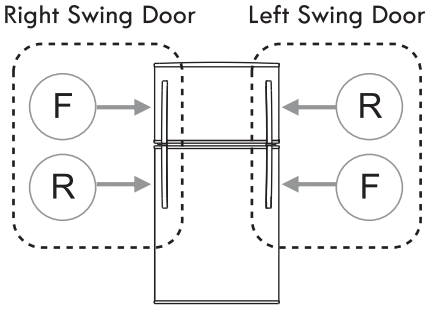

Step: 1.
Install the standoff screws (B)
(typically into both the freezer and refrigerator doors)

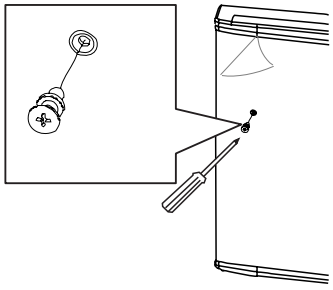

NOTE: Remove protective film before installing the handle. (on some models)

Step: 2.
Install the handle screws (C) (typically 2 per handle). Make sure the opposite end of the handle is placed over the standoff screw (B) prior to tightening the screws (C).

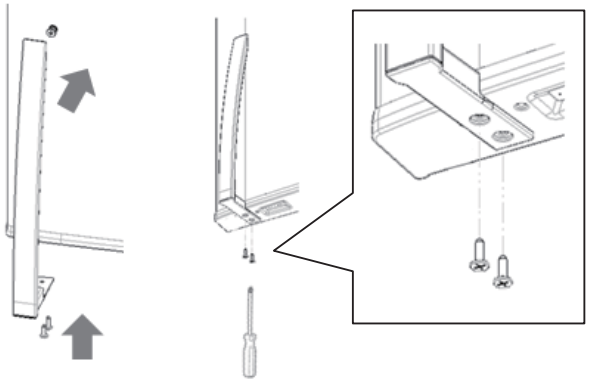

Step: 3.
Tighten the hex screw in the handles using the hex wrench provided.

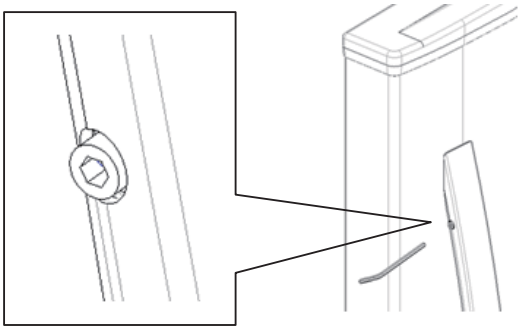

Adjusting the Doors

Leveling

Your refrigerator has two front adjustable legs - near each front corner of ther refrigerator, next to the rollers. If your refrigerator seems unsteady or you want the doors to close easier, adjust the refrigerator's tilt using the following instructions:

1. Remove the base grille. See "Front Base Grille Installation".

2. Turn the two front leveling legs clockwise to raise the front of the refrigerator and counterclockwise to lower.

   NOTE: Having someone push against the top of the refrigerator takes some weight off the leveling legs which makes it easier to adjust.

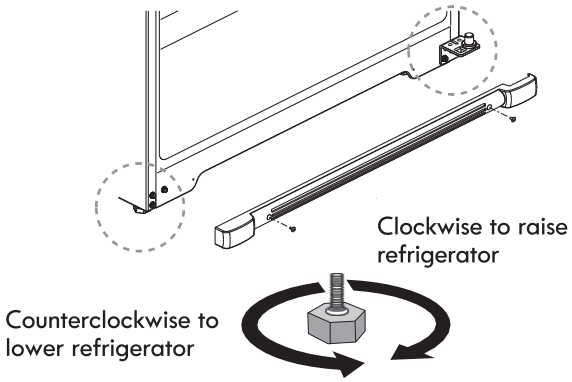

3. Open both doors again to make sure they close as easily as you like and that they stay closed. If not, tilt the refrigerator slightly more to the rear by turning both leveling legs clockwise .

4. Replace the base grille.

NOTE:
- Before moving the refrigerator away from the wall be sure to turn the leveling legs counterclockwise so that the weight of the refrigerator is fully transferred to the front rollers.
- If the floor is not level and it is necessary to raise the rear of ther refrigerator we suggest rolling the rear rollers onto a piece of plywood or other shim material.

Door Aligning

If the space between your doors looks uneven, you can adjust it using the following instructions:

NOTE: Use foam door spacer to set the correct gap between the freezer and refrigerator door. Place spacer between the doors when tightening the freezer door top hinge.

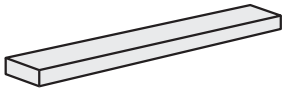

If the freezer door is too high:
1. Remove the hinge cap on top of the freezer door and loosen the screws with a 5/16 " socket and ratchet.
2. Place the door spacer between the doors to establish the correct gap and tighten the hinge screws.
3. Fully tighten all screws and replace the hinge cap.

If both doors are too high:
1. Remove the hinge cap on top of the freezer door and loosen the screws with a 5/16 " socket and ratchet.
2. Loosen the two middle hinge screws with a 5/16 " socket and ratchet.
3. Slide the middle hinge to the left to lower the doors.
4. Fully tighten all screws and replace hinge cap.

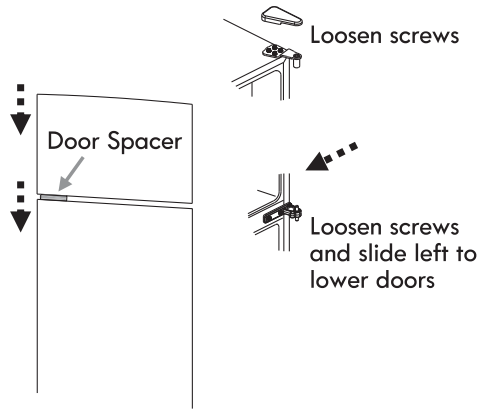

If both doors are too low:
1. Remove the hinge cap on top of the freezer door and loosen the screws with a 5/16 " socket and ratchet.
2. Loosen the two middle hinge screws with a 5/16 " socket and ratchet.
3. Slide the middle hinge to the right to raise the doors.
4. Fully tighten all screws and replace hinge cap.

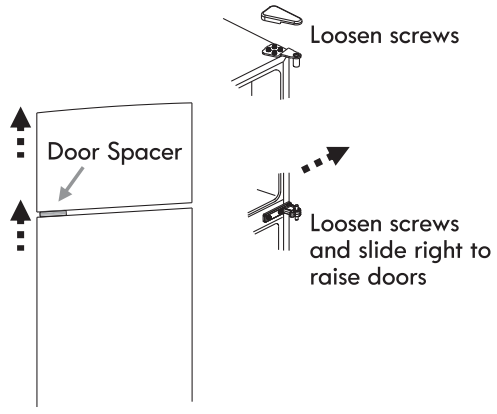

Using the Controls

Your refrigerator has two controls that affect the temperature.
The Temperature control is located at the top front of the refrigerator compartment and the Airflow control is located on the back wall of the freezer compartment.

Important:

- The recommended setting should be correct for normal household refrigerator use. The controls are set correctly when milk or juice is as cold as you like and when ice cream is firm.
- Wait 24 hours for your refrigerator to cool completely before adding food. If you add food before the refrigerator has cooled completely, your food may spoil. **NOTE:** Adjusting the refrigerator and freezer temperature controls to a colder than recommended setting will not cool the compartments any faster.
- If the temperature is too warm or too cold in the refrigerator or freezer, first check the air vents to be sure they are not blocked before adjusting the controls.

Refrigerator Temperature Control

The temperature control dial is calibrated in a range from 1 (least cold) to 7 (coldest). For your convenience, the temperature control is preset at the factory to the recommended setting (4).

Recommended Setting "4"

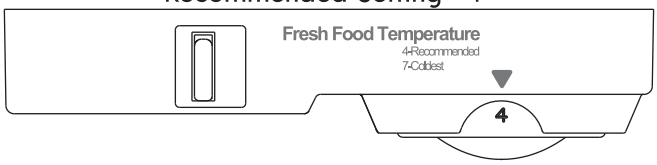

NOTE: Your refrigerator will run continuously for several hours when you first start it. This is normal.

Adjusting the Temperature Control
If you need to adjust the temperature in the refrigerator (or freezer compartment), follow the indications in the TEMPERATURE CONTROL GUIDE table.

NOTE: Do not adjust the control more than one setting at a time. Wait 24 hours between adjustments for the temperature to stabilize.

- Garage Ready Settings: For optimal operation in a garage environment, set temperature control in refrigerator compartment to 4 and set temperature control in freezer compartment to Recommended.

NOTE: Sustained exposure to ambient temperatures below 39°F (4°C) may result in freezing of food and beverages stored in the refrigeration section.

Freezer Temperature Control

The temperature control dial is calibrated in a range from "Coldest" to "Cold".

For your convenience, the Temperature control is preset at the factory to the recommended setting which is indicated on the dial.

Use the freezer temperature control to adjust the freezer temperature to your desired condition. It is recommended that when you plug in the refrigerator for the first time, make sure the control setting is on Recommended.

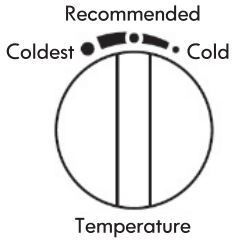

Adjusting the freezer Temperature
If you need to adjust the temperature in the freezer (or refrigerator compartment), follow the indications in the TEMPERATURE CONTROL GUIDE table below.

Important: Once the performance is achieved, return the Airflow control to the Recommended setting to keep the refrigerator operating at optimum efficiency.

TEMPERATURE CONTROL GUIDE

Condition/reason	Adjustment
REFRIGERATOR too warm	Refrigerator temperature Control one setting higher
FREEZER too warm/too little ice	Freezer Temperature Control one setting higher
REFRIGERATOR too cold	Refrigerator temperature Control one setting lower
FREEZER too cold	Freezer Temperature Control one setting lower
Faster Ice Production	COLDEST
High Temperature location (over 90 deg F)	COLDEST - To maintain ice making production rate

Frost Free

Your refrigerator is designed to defrost automatically

Warm Cabinet Surfaces

At times, the front of the refrigerator cabinet may be warm to the touch. This is a normal occurrence that helps prevent moisture from condensing on the cabinet. The condition will be more noticeable when you first start the refrigerator, during hot weather and after excessive or lengthy door openings.

Icemaker (on some models)

Turning the Icemaker On/Off

NOTE: Do not force the wire shutoff arm up or down.

- To turn the icemaker on, simply lower the wire shutoff arm.

  NOTE: Your icemaker has an automatic shutoff. As ice is made, the ice cubes will fill the ice storage bin and the ice cubes will raise the wire shutoff arm to the OFF (arm up) position.

- To manually turn the icemaker off, lift the wire shutoff arm to the OFF (arm up) position and listen for the click to make sure the icemaker will not continue to operate.

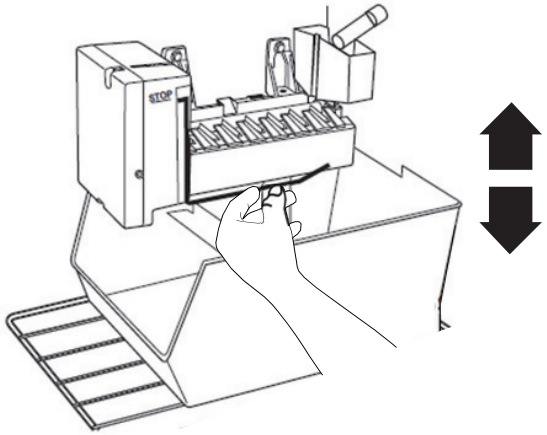

NOTE: Turn the icemaker off before removing the ice storage bin to serve ice or to clean the bin. This will keep the ice cubes from dropping out of the icemaker and into the freezer compartment. After replacing the ice storage bin, turn on the icemaker.

Ice Production Rate

- The icemaker should produce approximately 8 to 12 batches of ice in a 24 hour period. If ice is not being made fast enough, turn the freezer control toward a higher (colder) number in half steps. Wait 24 hours and, if necessary, gradually turn the freezer control to the highest setting, waiting 24 hours between each increase.

Remember

- The icemaker will not begin to operate until it reaches a temperature of 15°F (-9°C) or below. It will then begin operation automatically.

- In conditions of lower water pressure or first water supply, the icemaker water valve may turn on up to 3 times to deliver enough water to the icemaker.

- Ice will only begin to be produce after 24 hours. Discard the first three batches of ice produced. This water supply is not component of refrigerator, consumer can buy it from electric device stores.

- The quality of your ice will be only as good as the quality of the water supplied to your icemaker. Avoid connecting the icemaker to a softened water supply. Water softener chemicals (such as salt) can damage parts of the icemaker and lead to poor quality ice. If a softened water supply cannot be avoided, make sure the water softener is operating properly and is well maintained.

- Do not store anything on top of the icemaker or in the ice storage bin.

REFRIGERATOR FEATURES

Your model may have some or all of these features.

To know about glass shelves and covers:

Refrigerator Shelves

The shelves in your refrigerator are adjustable to match your individual storage needs.
Storing similar food items together in your refrigerator and adjusting the shelves to fit different heights of items will make finding the exact item you want easier. It will also reduce the amount of time the refrigerator door is open, and save energy.

Important:

Do not clean glass shelves or covers with warm water when they are cold. Shelves and covers may break if exposed to sudden temperature changes or impact, such as bumping.
Tempered glass is designed to shatter into many small, pebble-size pieces. This is normal.
Glass shelves and covers are heavy. Use both hands when removing them to avoid dropping.

CAUTION: To avoid personal injury or property damage.

- Never attempt to adjust a shelf when it is loaded with food.
- Confirm that shelf is secure prior to loading items onto it.

Full Width Shelf

Select models are equipped with wire or glass full width shelves that are supported by rails molded into the interior walls of the fresh food compartment.

To remove and replace a full width shelf:

Remove food from the shelf.
Grasp each side of the shelf.
Pull the shelf forward approximately 1 inch (25mm).
While supporting the shelf from underneath, lift it up and out.
Slide the shelf into the desired alternate position.

Half-Width Shelf

One side of the shelf rests on a molded side-wall support; a bracket on the other side hooks into a track on the rear cabinet wall.

To remove and replace a half-width shelf:

1. Remove food from the shelf.
2. Tilt up the front edge of the shelf.
3. Lift up the rear of the shelf.
4. Pull the shelf out of the track.
5. Move the shelf into the desired alternate position.
6. While tilting the shelf up, insert the top hook at the back of the shelf in a slot on the track.
7. Lower the front of the shelf until the bottom of the shelf locks into place.

.

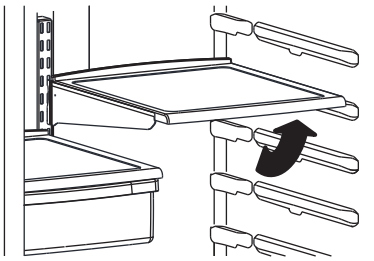

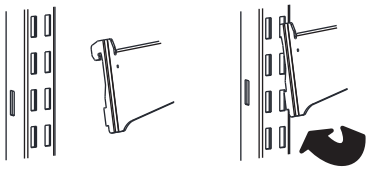

Deli Drawer

To remove and replace the deli drawer:

1. Slide deli drawer out to the stop.
2. Lift front of deli drawer with one hand while supporting bottom of drawer with other hand. Slide drawer out the rest of the way.
3. Replace the drawer by sliding it back in fully past the drawer stop.

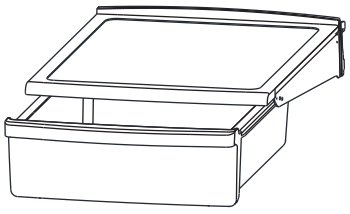

Crisper

Crisper Drawers

The Crispers provide a storage area for fruit and vegetables.
Excess water that may accumulate in the bottom of the drawers or under the drawers should be wiped dry.

To remove and replace the crisper drawer:

1. Slide the crisper drawer straight out to the stop. Lift the front and slide the drawer out the rest of the way.
2. Replace the drawer by sliding the drawer in fully past the stop.

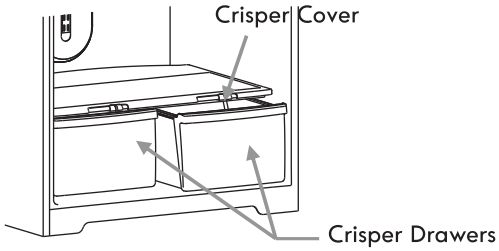

NOTE: If the refrigerator door prevents you from taking out a crisper drawer, first try removing any obstructing door bins. If bin removal still does not provide enough clearance, the refrigerator will need to be rolled forward from its installation position until the door can be opened enough to glide the drawers out.

Crisper Cover

To remove and replace the crisper cover:

1. Remove the food from the cover and then the crisper drawers.
2. Remove the glass pane from the cover frame.
3. Slightly lift up the front of the crisper cover frame.
4. Support the cover from underneath to lift it up and then out of the cabinet.
5. To replace the cover, tilt front of cover frame slightly up and carefully insert the back of the cover frame into the cabinet.
   With the cover front tilted slightly upward, carefully insert the cover top back into the cabinet.
6. Position the back and sides of the cover on the supports and let the cover top settle into place.
7. Replace the glass by pushing the front edge firmly into the crisper cover. Replace the drawers.

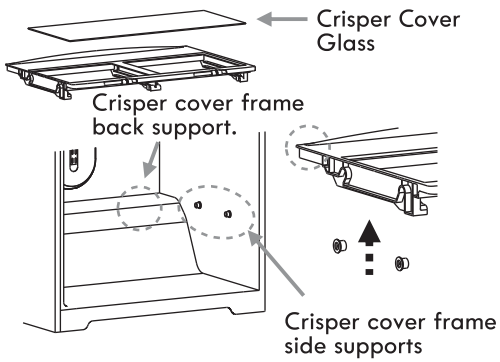

Crisper Humidity Control

You can control the amount of humidity in the moisture-sealed crisper. For most fruits, slide the control (select models) to “lo” to provide and vegetables with skins lower humidity conditions in the drawer. For leafy vegetables, slide the control to “hi” to provide higher humidity conditions in the drawer. For best results, keep the crisper drawers tightly closed.

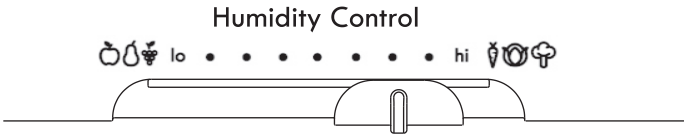

- Fruit: Wash, let dry and store in refrigerator in plastic bag or crisper. Do not wash or hull berries until they are ready to use. Sort and keep berries in original container in crisper, or store in a loosely closed paper bag on a refrigerator shelf.
- Vegetables with skins: Place in plastic bag or plastic container and store in crisper.
- Leafy vegetables: Wash in cold water, drain and trim or tear off bruised and discolored areas. Place in plastic bag or plastic container and store in crisper.

⚠ CAUTION:

To avoid personal injury or property damage.
- Never attempt to adjust a shelf when it is loaded with food.
- Confirm that shelf is secure prior to loading items onto it.

To remove and replace a wire shelf:

1. Remove the food from the shelf.
2. Lift up left side of shelf slightly and slide it left as far as it will go into the center of the left shelf support holes. The right side of the shelf will release from the support holes on the right. Raise up right side of shelf to remove from freezer compartment.
3. To replace, angle right side of shelf up and insert left side of shelf as far as it will go into the center of the left shelf support holes. Lower the right side of shelf to align with right side support holes. Slide the shelf to the right to secure into the support holes.
   NOTE: If icemaker is not in use, the shelf may be inserted into the higher set of support holes to adapt to storage needs once the ice storage bin is removed.
4. To replace, holding the shelf diagonally, insert the left end of the shelf into the center of the shelf supports ont the side wall.
5. Insert the right end of the shelf into the shelf supports on the side wall. Rest each end of the shelf on the bottom of the shelf supports.

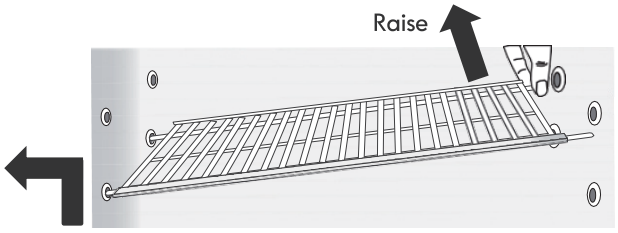

Lift up and slide

Door Bins

To remove and replace the bins:

1. Remove the bin by lifting it and pulling it straight out.
2. Replace the bin by sliding it in above the desired support and pushing it down until it stops.

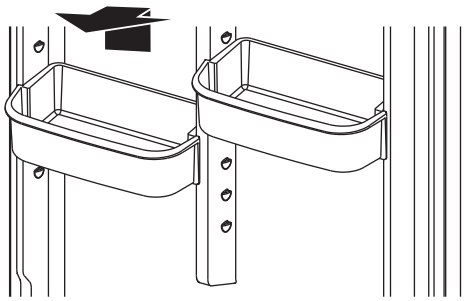

Dairy Compartment

The covered dairy compartment is designed to store spreadable food items such as butter or margarine. To use this compartment, simply raise the lid to store or retrieve items.

To remove for cleaning:

1. Grasp the dairy compartment from the bottom and lift up and out.

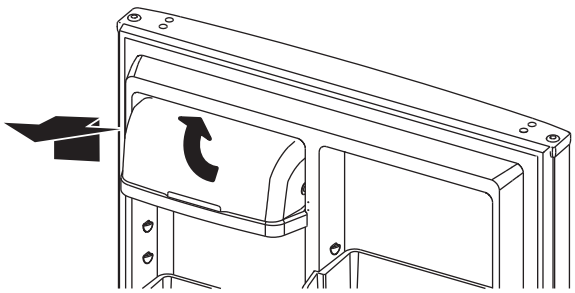

FOOD STORAGE GUIDE

Fresh Food Storage

- The fresh food compartment of a refrigerator should be kept between 34°F (1°C) and 40°F (4°C) with an optimum temperature of 37°F (3°C). To check the temperature, place an appliance thermometer in a glass of water and place in the center of the refrigerator. Check after 24 hours. If the temperature is above 40°F (4°C) adjust the control as explained on "**Temperature Control**" page.

- Avoid overcrowding the refrigerator shelves. This reduces the circulation of air around the food and results in uneven cooling.

- Storage in the crisper drawers traps humidity to help preserve the fruit and vegetable quality for longer time periods

- Sort fruits and vegetables before storage and use bruised or soft items first. Discard those showing signs of decay.

- Always wrap odorous foods such as onions and cabbage so the odor does not transfer to other foods.

- While vegetables need a certain amount of humidity to remain fresh, too much moisture can shorten storage times (especially leafy items). Drain vegetables well before storing.

- Raw meat and poultry should be wrapped securely so leakage and contamination of other foods or surfaces does not occur.

- Occasionally mold will develop on the surface of hard cheeses (Swiss, Cheddar, Parmesan). Cut off at least an inch around and below the moldy area.
  Keep your knife or instrument out of the mold itself.
  Do not try to save individual cheese slices, soft cheese, cottage cheese, cream, sour cream or yogurt when mold appears.

- Most dairy foods such as milk, yogurt, sour cream and cottage cheese have freshness dates on their cartons for appropriate length of storage.
  Store these foods in the original carton and refrigerate immediately after purchasing and after each use.

Freezer Food Storage

- The freezer compartment of a refrigerator should be kept at approximately 0°F (-18°C). To check the temperature, place an appliance thermometer between the frozen packages and check afeter 24 hours. If the temperater is above 0°F (-18°C), adjust the control as explained on "**Temperature Control**" page.

- Storage times will vary according to the quality and type of food, the type of packaging or wrap used (should be airtight and moisture-pfoof), and the storage temperature.

- Seal the package or container securely to avoid taste and odor transfer throughout the product. Ice crystals inside a sealed package are normal. This simply means that moisture in the food and air inside the package have condensed, creating ice crystals.

- A freezer operates more efficiently when it is at least 2/3 full. Leave a space between the packages so cold air can circulate freely, allowing food to freeze as quickly as possible.

- To minimize dehydration and quality deterioration use aluminum foil, freezer wrap, freezer bags or airtight containers. Force as much air out of the packages as possible and be sure they are tightly sealed. Trapped air can cause the food to dry out, change color and develop an off-flavor (freezer burn).

- Do not refreeze meat that has completely thawed.

- Avoid adding too much warm food to the freezer at one time. This overloads the freezer, slows the rate of freezing and can raise the temperature of frozen foods.

- Avoid storing hard-to-freeze foods such as ice cream and orange juice on the freezer door shelves. These foods are best stored in the freezer interior where the temperature varies less with door openings.

Cleaning

⚠ WARNING



Explosion Hazard

Use nonflammable cleaner.

Failure to do so can result in death, explosion, or fire.

Both the refrigerator and freezer sections defrost automatically. However, clean both sections about once a month to avoid buildup of odors. Wipe up spills immediately.

Important: Because air circulates between both sections, any odors formed in one section will transfer to the other. You must thoroughly clean both sections to eliminate odors. To avoid odor transfer and drying out of food, wrap or cover foods tightly.

To Clean Your Refrigerator

Warning: To avoid electrical shock which can cause severe personal injury or death, disconnect the power cord before moving or cleaning the refrigerator.

NOTE: Do not use abrasive or harsh cleaners such as window sprays, scouring cleansers, flammable fluids, cleaning waxes, concentrated detergents, bleaches or cleansers containing petroleum products on exterior surfaces (doors and cabinet), plastic parts, interior and door liners or gaskets. Do not use paper towels, scouring pads, or other harsh cleaning tools.

1. Unplug refrigerator or disconnect power.

2. Hand wash, rinse, and dry removable parts and interior surfaces thoroughly. Use a clean sponge or soft cloth and a mild detergent in warm water.

3. Clean the exterior surfaces.

   Painted metal: Wash painted metal exteriors with a clean, soft cloth or sponge and a mild detergent in warm water. Rinse surfaces with clean, warm water and dry immediately to avoid water spots.

   Stainless Steel: Wash stainless steel surfaces with a clean, soft cloth or sponge and a mild detergent in warm water. Rinse surfaces with clean, warm water and dry immediately to avoid water spots.

   NOTE: When cleaning stainless steel, always wipe in the direction of the grain to avoid cross-grain scratching.

   Stainless Steel Cleaner
   For best cleaning results, use Kenmore Stainless Steel Cleaner item #02240083 or equivalent. Available on Kenmore.com or by calling 1-844-553-6667.

4. There is no need for routine condenser cleaning in normal home operating environments. If the environment is particularly greasy or dusty, or there is significant pet traffic in the home, the condenser should be cleaned every 2 to 3 months to ensure maximum efficiency. If you need to clean the condenser:

   - Remove the base grille. See **Front Base Grille** in Installation Instructions section.
   - Use a vacuum cleaner with a soft brush to clean the grille, the open areas behind the grille and the front surface area of the condenser.
   - Replace the base grille when finished.

5. Plug in refrigerator or reconnect power.

Vacation and Moving Care

Vacations

If you choose to leave the refrigerator on while you're away:

1. Use up any perishables and freeze other items.

2. If your refrigerator has an automatic icemaker, and is connected to the household water supply, turn off the water supply to the refrigerator. Property damage can occur if the water supply is not turned off.

3. If you have an automatic icemaker, turn off the icemaker.
   NOTE: Raise the wire shutoff arm to OFF (up) position.

4. Empty the ice bin.

If you choose to turn off the refrigerator before you leave:

1. Remove all food from the refrigerator.

2. Disconnect the refrigerator from the electrical outlet.

3. If your refrigerator has an automatic icemaker:
   - Turn off the water supply to the icemaker at least one day ahead of time.
   - When the last load of ice drops, raise the wire shutoff arm to the OFF (up) position.
   - Bleed the water from the icemaker fill line and dry the icemaker thoroughly.

4. Clean refrigerator, wipe it, and dry well.

5. Tape rubber or wood blocks to the tops of both doors to prop them open far enough for air to get in. This stops odor and mold from building up.

NOTE: If using an automatic icemaker, discard first two or three ice harvests, when refrigerator is put back into service .

Moving

1. If your refrigerator has an automatic icemaker:
   - Turn off the water supply to the icemaker at least one day ahead of time.
   - Disconnect the water line from the back of the refrigerator.
   - When the last load of ice drops, raise the wire shutoff arm to the OFF (up) position.

2. Remove all food from the refrigerator and pack all frozen food in dry ice.

3. Empty the ice bin.

4. Unplug refrigerator.

5. Clean, wipe, and dry thoroughly.

6. Take out all removable parts, wrap them well, and tape them together so they don't shift and rattle during the move.

7. Depending on the model, raise the front of the refrigerator so it rolls more easily OR raise the leveling legs so they don't scrape the floor.

8. Tape the doors closed and tape the power cord to the back of the refrigerator.

When you get to your new home, put everything back and refer to the "Installation Instructions" section for preparation instructions. Also, if your refrigerator has an automatic icemaker, remember to reconnect the water supply to the refrigerator.

TROUBLESHOOTING GUIDE

First try the solutions suggested here or visit our website to possibly avoid the cost of a service call.

⚠ WARNING



Electrical Shock Hazard

Plug into a grounded 3 prong outlet.
Do not remove ground prong. Do not use an adapter.
Do not use an extension cord.
Failure to follow these instructions can result in death, fire, or electrical shock.

⚠ WARNING



Explosion Hazard

Use nonflammable cleaner.
Failure to do so can result in death, explosion, or fire.

Review this chart of troubleshooting tips first…you may not need to call for service at all.

GENERAL OPERATION

Problem	Possible Causes	What to Do
The refrigerator will not operate	Not connected to an electrical supply	Plug the power cord into a grounded 3 prong outlet. Do not use an extension cord.
	No power to the electrical outlet.	Plug in a lamp to see if the outlet is working.
	Household fuse blown or circuit breaker tripped.	Replace the fuse or reset the circuit breaker. If the problem continues, contact an electrician.
	New installation	Allow 24 hours following installation for the refrigerator to cool completely.
Runs too long, too frequently	Today's refrigerators start and stop more often to maintain even temperatures.	
	Normal at startup for new or recently installed units.	Wait 24 hours for refrigerator to completely cool down (see "Temperature Controls" page).
	Prolonged or frequent door openings.	This is normal. Minimize door openings.
	Door not sealing.	Check to see if something is preventing door from closing.
	Front base grille blocked.	Unblock to allow warm air to exit unit.
The door will not close completely	The door is blocked open	Move food packages away from door. Push bin or shelf back into the correct position. Make sure the crisper cover is fully pushed in, so that the back rests on the supports.
The door is difficult to open	Gaskets are dirty or sticky.	Clean gaskets and contact surfaces with mild soap and warm water. Rinse and dry with soft cloth.
Warm air from cabinet bottom	This is normal air flow for condenser circulation.	
There is interior moisture buildup.	Humid room	Contributes to moisture buildup in the refrigerator.
	Door(s) opened often or not closed completely.	Allows humid air to enter the refrigerator. Minimize door openings and keep door fully closed.
Cabinet vibrates	Cabinet not level. Weak floor.	Level cabinet.
Odor in cabinet	Odor producing foods not covered.	Cover or wrap odorous foods tightly. Clean cabinet.

TROUBLESHOOTING GUIDE

TEMPERATURE

Problem	Possible Causes	What to Do
Freezer, refrigerator too warm	New installation	Allow 24 hours following installation for the refrigerator to cool completely.
	Control set too warm. Prolonged door openings.	Adjust temperature control. Minimize door openings.
	A large amount of warm food has been recently added.	Allows several hours for refrigerator to return to normal temperature.
	Products with high sugar content may not harden completely when frozen.	
Freezer, refrigerator too cold	Control set too cold.	Adjust temperature control.

NOISE

Problem	Possible Causes	What to Do
The refrigerator is noisy **NOTE:** Refrigerator noise has been reduced over the years. Due to this reduction in operating noise, you may notice unfamiliar noises that are normal.	Normal noise: buzzing	Heard when the water valve opens to fill the icemaker
	Normal noise: clicking/Snapping	Valves opening or closing
	Normal noise: pulsating	Fans/compressor adjusting to optimize performance
	Normal noise: sizzling/Gurgling	Water dripping on the heater during defrost cycle
	Normal noise: popping	Contraction/expansion of inside walls, especially during initial cool-down.
	Normal noise: water running	May be heard when ice melts during the defrost cycle and water runs into the drain pan.
	Normal noise: creaking/cracking	Occurs as ice is being ejected from the icemaker mold.
	Cabinet not level.	Level cabinet.

TROUBLESHOOTING GUIDE

Icemaker

Problem	Possible Causes	What to Do
The icemaker is not producing ice or not enough ice (on some models)	The icemaker is not connected to a water supply	Connect refrigerator to water supply and turn water shutoff valve fully open.
	A kink in the line can reduce water flow	Straighten the water source line
	Icemaker is not turned on	Make sure the icemaker wire shutoff arm or switch (depending on model) is in the ON position.
	New installation	Ice will only begin to be produce after 24 hours
	Large amount of ice recently removed	Allow sufficient time for icemaker to produce more ice.
	Ice cube jammed in the icemaker ejector arm	Remove ice from the ejector arm with a plastic utensil.
	A reverse osmosis water filtration system connected to your cold water supply can decrease water pressure	See “Water Supply Requirements.”
The ice cubes are hollow or small (on some models) **NOTE:** This is an indication of low water pressure.	The water valve is not completely open	Turn the water shutoff valve fully open
	A kink in the line can reduce water flow	Straighten the water source line.
	A reverse osmosis water filtration system connected to your cold water supply can decrease water pressure	See “Water Supply Requirements”
	Supply line or shuoff valve is clogged.	Call a licensed, qualified plumber
Off-taste, odor or gray color in the ice (on some models)	New plumbing connections can cause discolored or off-flavored ice	Discard the ice and wash the ice storage bin. Allow 24 hours for the icemaker to make new ice, and discard the first 3 batches of ice produced.
	Ice stored too long can develop an off-taste	Discard ice. Wash ice bin. Allow 24 hours for icemaker to make new ice.
	Food odor transferring to ice	Use airtight, moisture proof packaging to store food.
	There are minerals (such as sulfur) in the water	A water filter may need to be installed to remove the minerals.

Kenmore®

Customer Care Hotline

To schedule in-home repair service
or order replacement parts

Para pedir servicio de reparación
a domicilio, y ordenar piezas

1-844-553-6667

www.kenmore.com

