Miele

Operating instructions
Fridge-freezer



It is **essential** to read these operating and installation instructions before installing and using the appliance. This prevents both personal injury and damage to the appliance.

en-AU, NZ

M.-Nr. 11 753 401

Contents

Warning and Safety instructions **5**

Caring for the environment **15**

Installation **16**
Installation location 16
Side-by-side combinations 17
Climate range 18
Ventilation 18
Furniture door 19
Horizontal and vertical gaps 19
Weight of the furniture door 20
Installation dimensions 21
Installation in a tall unit/side view 21
Connections and ventilation 22
Limiting the opening angle of the appliance doors 23
Electrical connection 24

Saving energy **25**

Guide to the appliance **26**
Display 28
Using the appliance 28
Settings mode 29
Adjusting the interior fittings 31
Using the door shelf fine adjustment 31
Repositioning the door shelf with fine adjustment 31
Moving the door/bottle shelf 32
Clipping the egg trays on 32
Adjusting or removing the bottle holder 32
Moving an adjustable shelf/adjustable shelf with lighting 32
Moving the adjustable shelf with pivotable glass shelf (FlexiTray) 33
Moving the storage drawer (CompactCase) 33
Moving the charcoal filters 34
Accessories supplied 35
Optional accessories 35

Switching on and off **36**
Before using for the first time 36
Connecting the appliance 36
Switching on the appliance 36
Switching off the appliance 37
Switching off the refrigerator section separately 37
Switching off for longer periods of time 37

Contents

The correct temperature **38**
Temperature display 39
Setting the temperature in the refrigerator/freezer sections 39
Possible temperature settings 39

Using SuperCool, SuperFreeze and DynaCool **40**

Selecting further settings **43**
Explanation of the different settings 43
Party mode 43
Holiday mode 43
Switching the lock function on 43
Sabbath mode 44
Changing the time before the door alarm is triggered 45
Miele@home 46
Changing the volume of the alarms and buzzers 48
Adjusting the display brightness 48
Switching off Demo mode 48
Resetting the settings to their factory default settings 48
Information 49
Charcoal filter change indicator 49
Cleaning mode 49

Temperature and door alarm **50**

Storing food in the refrigerator section **52**
Different storage zones 52
Food which is not suitable for storage in the refrigerator 53
Notes on buying food 53
Storing food correctly 54

Storing food in the DailyFresh drawer **55**

Freezing and storing food **57**
Freezing fresh food 57
Storing frozen food 57
Home freezing 58
Storage time for frozen food 59
Cooling drinks quickly 60

Defrosting **61**

Cleaning and care **62**
Cleaning agents 62
Preparing the refrigeration appliance for cleaning 63
Cleaning the interior of the machine 64
Cleaning accessories by hand or in the dishwasher 64

Contents

Removing and dismantling accessories for cleaning 65
Cleaning the door seal 73
Cleaning the ventilation gaps 73
After cleaning 74

Problem solving guide **75**

Noises **85**

Service **86**
Contact in case of fault 86
Warranty 86

This refrigeration appliance complies with current local and national safety requirements. However, inappropriate use can lead to personal injury and damage to property.

Please read the operating and installation instructions carefully before using the refrigeration appliance for the first time. They contain important information on safety, installation, use and maintenance of the appliance. This is to protect yourself from injury and from damaging your refrigeration appliance.

In accordance with standard IEC 60335-1, Miele expressly and strongly advises that you read and follow all information provided concerning the installation of the refrigeration appliance, as well as safety notes and warnings.

Miele cannot be held liable for injury or damage caused by non-compliance with these instructions.

Keep these instructions in a safe place and pass them on to any future owner.

Correct application

▶ This appliance is designed for domestic use and for use in similar environments by guests in hotel or motel rooms, bed & breakfasts and other typical living quarters. This does not include common/ shared facilities or commercial facilities within hotels, motels or bed & breakfasts.

This appliance is not suitable for outdoor use.

▶ This appliance is intended for cooling and storing food and drinks as well as for storing deep-frozen food, freezing fresh food and for making ice.
Any other usage is not supported by the manufacturer and could be dangerous.

▶ This appliance is not suitable for storing and keeping cool medicines, blood plasma, laboratory preparations or similar substances or products. Incorrect use of the appliance for such purposes may cause deterioration of the items stored.
The appliance is also not suitable for use in areas where there is a risk of explosion.
Miele cannot be held liable for damage resulting from incorrect or improper use or operation of the appliance.

▶ This appliance is not intended for use by persons (including children) with reduced physical, sensory or mental capabilities or lack of experience and knowledge, unless they have been given supervision and instruction concerning its use by a person responsible for their safety.
They may only use the appliance unsupervised if its operation has been clearly explained to them and they are able to use it safely and are able to understand and recognise the possible dangers caused by incorrect operation.

Safety with children

▶ Young children must not be allowed to use this appliance.

▶ Older children may only use the appliance when its operation has been clearly explained to them and they are able to use it safely, recognising the dangers of misuse.

▶ Cleaning work may only be carried out by older children under the supervision of an adult.

▶ Please supervise children in the vicinity of the appliance and do not let them play with it.

▶ Danger of suffocation! Children may be able to wrap themselves in packing material (e.g. foil) or pull it over their head with the risk of suffocation. Keep packaging material away from children.

Technical safety

▶ The refrigerant circuit has been checked for leaks. The refrigeration appliance complies with all current local and national safety requirements.



▶ Warning: Risk of fire / Flammable materials.

The refrigerant inside the appliance (details on the data plate) is environmentally friendly but flammable.
The use of this refrigerant does, however, sometimes lead to a slight increase in the noise level of the appliance. In addition to the noise of the compressor, you might be able to hear the refrigerant flowing around the system. Unfortunately, these effects cannot be avoided, but they do not not affect the performance of the refrigeration appliance.
When transporting and installing the refrigeration appliance, ensure that no parts of the cooling circuit are damaged. Splashes of refrigerant can damage the eyes and leaking refrigerant can ignite.
In the event of any damage:

- Avoid naked flames or anything which creates a spark.
- Disconnect the refrigeration appliance from the mains electricity supply.
- Ventilate the room in which the appliance is located for several minutes.
- Call Miele.

▶ The more refrigerant there is in a refrigeration appliance, the larger the room should be in which it is installed. In the event of a leakage, if the appliance is in a small room, there is the danger of a combustible gas/air mixture building up. For every 8 g of refrigerant, at least 1 m^3 of room space is required. The amount of refrigerant in the refrigeration appliance is stated on the data plate inside the appliance.

▶ To avoid the risk of damage to the appliance, make sure that the connection data (fuse rating, frequency and voltage) on the data plate corresponds to the household supply. Check that this is the case before connecting the appliance.
Consult a qualified electrician if in any doubt.

▶ The electrical safety of this appliance can only be guaranteed when correctly earthed. It is essential that this standard safety requirement is met. If in any doubt please have the electrical installation tested by a qualified electrician.

▶ Temporary or permanent operation with a self-sufficient or non-mains synchronous energy supply system (e.g. isolated networks, back-up systems) is possible. A requirement for the operation is that the energy supply system complies with all current local and national requirements that apply to stand-alone, solar and/or battery systems. The protective measures provided in the installation and in this Miele product must also be assured in their function and operation in isolated operation or in non-mains synchronous operation, or replaced with equivalent measures in the installation.

▶ If the electrical connection cable supplied is damaged, it must only be replaced by an original spare part to prevent a hazard for the user. Miele can only guarantee the safety of the appliance when original Miele parts are used. For safety reasons, replacement may only be carried out by a suitably qualified specialist or Miele Customer Service.

▶ Do not connect the appliance to the mains electricity supply by a multi-socket unit or an extension lead. These do not guarantee the required safety of the appliance (e.g. danger of overheating).

▶ If moisture gets into electrical components or into the mains connection cable, it could cause a short circuit. Therefore, do not operate this refrigeration appliance in areas which are exposed to moisture (e.g in a garage or laundry).

▶ This appliance must not be installed and operated in mobile installations (e.g. on a ship).

▶ Do not use a damaged appliance. It could be dangerous. Check the appliance for visible signs of damage.

▶ For safety reasons, this appliance may only be used when it has been fully installed.

▶ During installation, maintenance and repair work, the appliance must be disconnected from the mains electricity supply. It is only completely isolated from the electricity supply when:

- the mains circuit breaker has been switched off, or
- the screw-out fuse is removed (in countries where this is applicable), or
- it is switched off at the wall socket and the plug is withdrawn from the socket. Do not pull the mains connection cable but the mains plug to disconnect your appliance from the mains electricity supply.

▶ Repairs and other work by unqualified persons could be dangerous. Installation must be performed by a suitably qualified and competent person. Maintenance and repairs must only be carried out by a Miele authorised technician.

▶ The manufacturer's warranty will be invalidated if the appliance is not repaired by a Miele authorised technician.

▶ Faulty components must only be replaced with genuine Miele original spare parts. Miele can only guarantee the safety standards of the appliance when Miele spare parts are used.

▶ This refrigeration appliance is supplied with a special lamp to cope with particular conditions (e.g., temperature, moisture, chemical resistance, abrasion resistance and vibration). This lamp must only be used for the purpose for which it is intended. The lamp is not suitable for room lighting. Replacement lamps may only be replaced by a Miele authorised technician. This refrigeration appliance contains several light sources with at least energy efficiency class F.

▶ In areas which may be subject to infestation by cockroaches or other vermin, pay particular attention to keeping the appliance and its surroundings clean at all times. Any damage caused by cockroaches or other vermin will not be covered by the warranty.

Correct installation

▶ When installing the refrigeration appliance, it is a mandatory requirement to follow the installation instructions supplied with it.

▶ Always wear protective gloves when transporting and installing the refrigeration appliance.

▶ Two people are required to install the refrigeration appliance.

▶ Change the door hinging (if necessary) as described in the installation instructions supplied with the appliance.

▶ Only install the refrigeration appliance in a solid, rectangular, and level housing unit, positioned on an even and level floor.

Correct use

▶ This refrigeration appliance is designed for use within specific ambient temperatures (climate range). Do not use it in ambient temperatures for which it is not designed. The climate class is stated on the data plate inside the refrigeration appliance. A lower ambient temperature will cause the compressor to switch off for longer periods, meaning that the refrigeration appliance is unable to maintain the required temperature.

▶ To ensure proper air flow in and out of the appliance, the ventilation gaps in the appliance and built-in structure must not be covered or blocked in any way. This would also increase the energy consumption and could cause damage to the appliance.

▶ If storing food which contains a lot of fat or oil in the appliance or the appliance door, make sure that it does not come into contact with plastic components as this could cause stress cracks or break the plastic. Make sure that no fat or oil leaks onto the plastic parts of the appliance.

▶ Risk of fire and explosion! Do not store any explosive materials or products containing flammable propellants (e.g. spray cans) in the refrigeration appliance. Electrical components can cause flammable mixes of gases to ignite.

▶ Danger of explosion! Do not operate any electrical equipment (e.g. an electric ice cream maker) inside the appliance. Danger of sparking and explosion.

▶ Risk of injury and damage! Do not store cans or bottles containing carbonated drinks or liquids which could freeze in the freezer section. Otherwise they could burst, causing injury or damage.

▶ Risk of injury and damage! When chilling drinks in the freezer section, make sure that bottles are not left in for more than one hour. Otherwise they could burst, causing injury or damage.

▶ Danger of injury! Never handle frozen food or the metal parts of the appliance with wet hands. Your hands may freeze to the frozen food or to the metal.

▶ Danger of injury! Do not take ice cubes out with your bare hands and never place ice cubes or ice lollies in your mouth straight from the freezer zone. The very low temperature of the frozen goods can cause frost burn to the lips and tongue.

▶ Do not refreeze thawed or partially thawed food. Defrosted food should be used up as quickly as possible, as food soon loses its nutritional value and goes off. Defrosted food may only be refrozen after it has been cooked.

▶ Food stored for too long may present a risk of food poisoning. Storage times will depend on several factors, including the freshness and quality of the food, as well as the temperature at which it is stored. Follow the instructions given on the food manufacturer's packaging regarding storage conditions and use-by dates.

Accessories and spare parts

▶ Only use original Miele accessories. Using spare parts or accessories from other manufacturers will invalidate the warranty, and Miele cannot accept liability.

▶ Miele will guarantee to supply functional spare parts for a minimum of 10 years and up to 15 years following the discontinuation of your refrigeration appliance.

Cleaning and care

▶ Do not use any oils or grease on the door seals, as these will cause the seals to deteriorate and become porous with time.

▶ Do not use a steam cleaning appliance to clean this appliance. Steam could reach the electrical components and cause a short circuit.

▶ Sharp edged or pointed objects will damage the evaporator, causing irreversible damage to the appliance. Do not use sharp edged or pointed objects to

- remove frost and ice, or accelerate the defrosting process,
- separate frozen foods and remove ice trays.

▶ Never place electric heaters or candles in the appliance to defrost it. These can damage the plastic parts.

▶ Do not use defrosting sprays or de-icers, as they might contain substances which could damage the plastic parts or which could cause a build-up of gases and pose a danger to health.

Transport

▶ To avoid damage to the appliance, always transport it upright and in its packaging.

▶ Risk of injury and damage! The refrigeration appliance is very heavy and must be transported by two people.

Disposal of your old appliance

▶ Children playing could become trapped in the refrigeration appliance and could suffocate.

- Remove the appliance door(s).
- Remove the drawers.
- Leave the adjustable shelves in the refrigeration appliance so children cannot climb inside.
- If your old refrigeration appliance has a door lock, destroy it. This way you will prevent the risk of playing children accidentally locking themselves in and endangering their lives.

▶ Risk of electric shock!

- Cut the electrical plug off the power supply cord.
- Cut the power supply cord off the old appliance.

Dispose of the electrical plug and power supply cord separately from the old appliance.

▶ During and after disposal, make sure that the refrigeration appliance is not placed near petrol or other flammable gases and liquids.

▶ Risk of fire due to escaping oil or refrigerant!
The refrigerant and oil inside the appliance are flammable. In high enough concentrations, escaping refrigerant or oil may ignite if they come into contact with an external heat source.
During disposal, make sure that the cooling circuit is not damaged in order to prevent refrigerant and oil escaping in an uncontrolled manner (see the data plate for details of the refrigerant).

▶ Splashes of coolant can damage the eyes. Be careful not to damage any part of the pipework whilst awaiting disposal, e.g. by

- puncturing the refrigerant channels in the condenser,
- bending any pipework, or
- scratching the surface coating.

Symbol on the compressor (depending on model)

This information is only relevant for recycling. There is no risk during normal operation.



▶ The oil in the compressor can be fatal if swallowed or if it penetrates the airways.

Disposal of the packing material

The transport and protective packaging has been selected from materials which are environmentally friendly for disposal, and can normally be recycled.

Recycling the packaging reduces the use of raw materials in the manufacturing process and also reduces the amount of waste in landfill sites. Ensure that any plastic wrappings, bags etc. are disposed of safely and kept out of the reach of babies and young children. Danger of suffocation.

Only for Australia: Note for installer: Expanded polystyrene (EPS) packaging included. Please retain and dispose of EPS packaging responsibly. For further information, please contact Miele.

Disposing of your old appliance

Electrical and electronic appliances contain many valuable materials. They also contain certain materials, compounds, and components which were essential for their correct functioning and safety. These could be hazardous to human health and to the environment if disposed of with general waste or if handled incorrectly. Please do not, therefore, dispose of your old appliance with your household waste.



Take care not to damage your refrigeration appliance before or during disposal in an authorised, environmentally friendly manner. This is to ensure that refrigerant in the cooling circuit and oil in the compressor is contained, and will not leak into the environment.

Please dispose of it at your local community waste collection/recycling centre for electrical and electronic appliances, or contact Miele. You are also responsible for deleting any personal data that may be stored on the appliance prior to disposal. You should remove any old batteries which are not securely enclosed by the appliance and remove any lamps without destroying them, where this is possible. These must be taken to a suitable collection point where they can be handed in free of charge. Please ensure that your old appliance presents no danger to children while being stored awaiting disposal.

Installation

Installation location

⚠ Danger of damage and injury due to the appliance tipping over!

This refrigeration appliance is very heavy and can tip forward when the door is open.

Keep the appliance door(s) closed until the refrigeration appliance has been built in. The refrigeration appliance must be secured in its building-in niche in accordance with the operating and installation instructions.

⚠ Fire hazard and risk of damage from appliances that give off heat.

Appliances that give off heat can catch fire and set fire to the refrigeration appliance.

This refrigeration appliance must not be installed underneath a cooktop.

⚠ Fire risk and danger of damage from open flames!

Open flames can set fire to the refrigeration appliance.

Keep open flames (e.g. a candle) away from the refrigeration appliance.

This appliance should be installed in a dry, well-ventilated room.

⚠ Risk of damage due to high humidity.

In environments with high humidity, condensation can build up on external refrigeration appliance panels.

This condensate can cause corrosion on external appliance panels.

Install the refrigeration appliance in a dry and/or air-conditioned room with sufficient ventilation.

After installation, please make sure that the appliance door(s) closes (close) properly and the refrigeration appliance is installed in accordance with these installation instructions. It is essential to comply with the specified ventilation cut-out requirements.

When deciding on the installation site, please bear in mind that your refrigeration appliance will use more energy if installed near to a heater, a cooker or other appliance that gives off heat. Avoid direct sunlight.

The higher the ambient temperature, the longer the compressor runs and the higher the energy consumption is.

Please note the following when installing the appliance:

- The mains socket must not be located directly behind the appliance and should be easily accessible.
- The plug and mains connection cable must not touch the rear of the refrigeration appliance as they could be damaged by vibrations from the appliance.
- Other appliances must also not be plugged into a socket located directly behind this appliance.
- WARNING: When positioning the appliance, ensure the mains connection cable is not trapped or damaged.
- WARNING: Do not locate multiple portable socket-outlets or portable power supplies at the rear of the appliance.
- The floor at the installation site must be horizontal and level and must be as high as the surrounding floor.

Side-by-side combinations

⚠ Risk of damage due to condensation on the external appliance panels.
In environments with high humidity, condensation can build up on external appliance panels, which can cause corrosion.
Do not place different refrigeration appliances directly next to one another.

If the model number for your refrigeration appliance does have the letter **S** in it, it can be installed side-by-side. Your refrigeration appliance is equipped with built-in heating units in the side panels.

Please contact Miele for information on which combinations are suitable for your appliance.

Installation

Climate range

This refrigeration appliance is designed for use within specific ambient temperatures (climate range). Do not use it in ambient temperatures for which it is not designed. The climate class is stated on the data plate inside the refrigeration appliance.

Climate range	Ambient temperature
SN	10 to 32 °C
N	16 to 32 °C
ST	16 to 38 °C
T	16 to 43 °C
SN-ST	10 to 38 °C
SN-T	10 to 43 °C

A lower ambient temperature leads to the compressor switching off for longer periods. This can cause the internal temperature in the appliance to rise with the risk of food deteriorating and going off.

Ventilation

⚠ Risk of fire and damage due to insufficient ventilation!

If the appliance is not ventilated sufficiently, the compressor will run more frequently and for longer periods. This will result in increased energy consumption and a higher operating temperature of the compressor. This, in turn, can result in damage to the compressor.

Please ensure that there is adequate ventilation around the appliance.

It is essential to observe the required ventilation gaps.

The ventilation gaps must not be covered or blocked in any way.

They must also be cleaned on a regular basis to remove dust.

Air at the back of the refrigeration appliance gets warm. The appliance housing unit must therefore be constructed to allow sufficient space for ventilation (see “Installation dimensions” and the installation instructions provided).

Furniture door

Horizontal and vertical gaps

Depending on the style of kitchen furniture, the thickness and edge radius of the furniture door panel and the gap that runs around the door, vertically and horizontally, are specified.

It is essential to pay attention to the following:

- **Horizontal gap**

The gap between the furniture door panel and the housing unit door above or below it must be at least 3 mm.

- **Vertical gap**

If the gap between the refrigeration appliance furniture door panel and the adjoining housing unit door or wall on the hinged side is too small, the appliance door could collide with the adjoining furniture unit door or side wall when opened.

It may be necessary to adjust the size of this gap to suit the thickness and edge radius of the appliance furniture door.

This must be taken into consideration when planning your kitchen and when replacing an old refrigeration appliance with a new one to ensure the installation conditions required are met.

Appliance furniture door thickness **A** [mm]	Gap **X** [mm] for different edge radii **B**			
	R0	R1.2	R2	R3
≥16–19	min. 3			
20	5	4	4	3.5
21	5.5	5	4.5	4
22	6.5	6	5.5	5

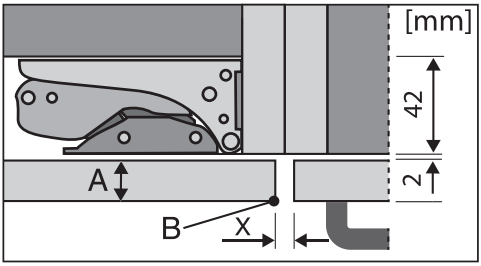

Adjoining kitchen furniture front

A = Furniture front thickness
B = Edge radius
X = Gap

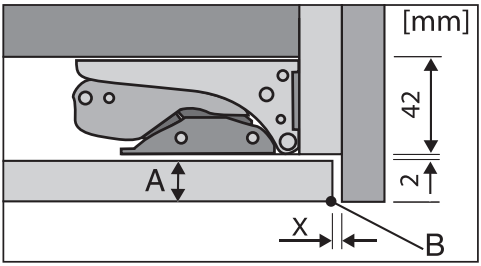

Adjoining side wall

A = Furniture front thickness
B = Edge radius
X = Gap

Useful tip: Fit a spacer between the housing unit body and the side wall. This way you will get a sufficiently wide gap.

Weight of the furniture door

⚠ If the door panel is too heavy, this can cause damage!
Fitting a furniture front which is heavier than the maximum permitted weight could damage the hinges. Among other things, this damage can lead to functional impairments.
Before fitting furniture doors, ensure that the weight of the door does not exceed the maximum weight permitted:

The maximum permissible weights of the door panels in kg are:

Refrigeration appliance	Upper furniture door panel	Lower furniture door panel
KFNS 7784 ...	18	12

Installation dimensions

Installation in a tall unit/side view

All dimensions are given in mm.

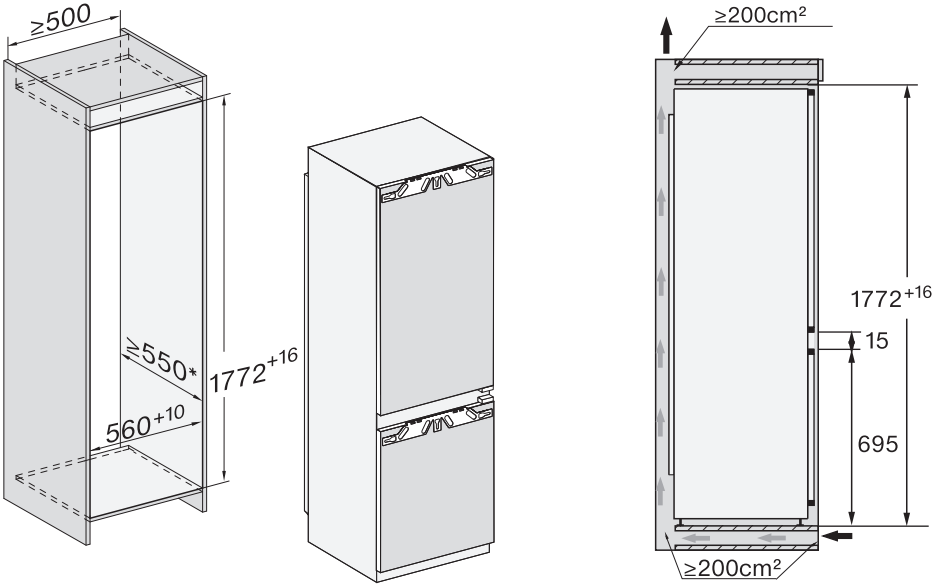

Before installation, ensure the furniture unit dimensions are the correct size.

Installation

Connections and ventilation

All dimensions are given in mm.

The specified ventilation cross-sections must be adhered to in order to ensure the correct functioning of the refrigeration appliance.

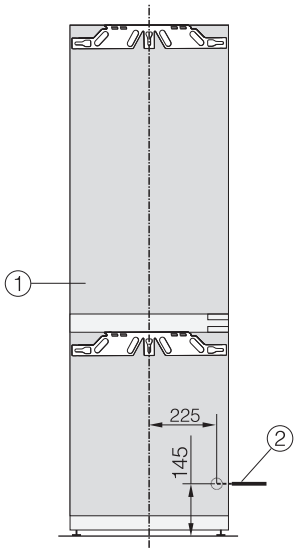

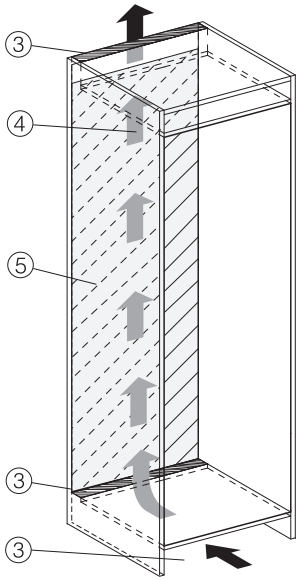

① Front view

② Mains connection cable, length = 2200 mm
A longer mains connection cable is available from Miele.

③ Ventilation cut-out min. 200 cm²

④ Ventilation

⑤ No connections permitted in the rear panel

Limiting the opening angle of the appliance doors

The door hinges are set to enable the appliance doors to be opened wide.

If the opening angle of the doors needs to be limited to approx. 90°, the hinge can be adjusted to accommodate this.

The locking pins for limiting the door opening must be fitted before the appliance is installed.

The refrigerator section door must be taken off in order to insert the pins into the upper hinge of the freezer section door (see the installation instructions provided).

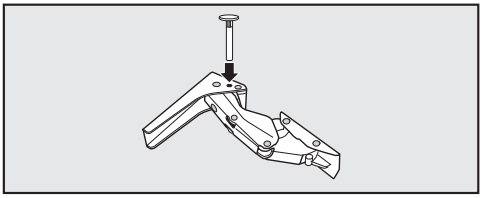

- Place the locking pins supplied for limiting the door opening into the hinges from above.

This will limit the opening angles of the appliance doors to approx. 90°.

Electrical connection

The refrigeration appliance must only be connected to an earthed socket using the connection cable supplied.

The socket should be easily accessible after the refrigeration appliance has been installed. If the socket is not easily accessible, ensure that a suitable means of disconnection is provided on the installation side for each pole.

⚠ Risk of fire from overheating.

Connecting the appliance to a multi-socket plug adapter or to an extension lead can overload the cable.

For safety reasons, do not use an extension cable or multi-socket adapter.

All electrical work must be carried out by a suitably qualified and competent person in strict accordance with national and local safety regulations.

For safety reasons, we recommend using a suitable residual current device (RCD) in the relevant electrical installation for connecting the refrigeration appliance.

If the mains connection cable is damaged, it must only be replaced with a specific mains connection cable of the same type (available from Miele).

The data plate indicates the nominal power consumption and the connection data. Compare this information with the data of the on-site electrical connection. If in any doubt, consult a qualified electrician.

Temporary or permanent operation with a self-sufficient or non-mains synchronous energy supply system (e.g. isolated networks, back-up systems) is possible. A requirement for the operation is that the energy supply system complies with all current local and national requirements that apply to stand-alone, solar and/or battery systems.
The protective measures provided in the domestic installation and in this Miele product must also be assured in their function and operation in isolated operation or in non-mains synchronous operation, or replaced with equivalent measures in the installation.

Connecting the appliance

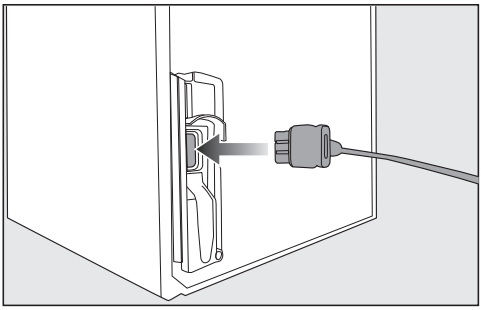

- Insert the plug connector into the back of the appliance.

Make sure that the plug connector has locked into position correctly.

- Insert the plug of the appliance into the socket and switch it on.

The appliance is now connected to the electricity supply.

How to save energy:

Installation location

The refrigeration appliance has to cool more often at higher ambient temperatures and consumes more energy in the process. Therefore, you should:

- Install the refrigeration appliance in a well-ventilated room.
- Do not install the refrigeration appliance near to a heat source (heater element, cooker).
- Protect the refrigeration appliance from direct sunlight.
- Ensure an ideal ambient temperature of 20 °C.
- Clean the ventilation gaps on a regular basis to remove any dust.

Temperature setting

The colder the temperature, the higher the energy consumption. The following settings are recommended:

- 4 to 5 °C in the refrigerator section.
- -18 °C in the freezer section.

Use

Energy consumption is increased by heat input and impeded air circulation. Therefore, you should:

- Only open the appliance door(s) when necessary and for as short a time as possible. Arrange the food in such a way that makes it easy to find in the appliance.
- Always close the appliance door(s) properly after opening them.
- Allow hot food and drinks to cool down before placing them in the refrigeration appliance.
- Store food well packaged or covered.
- Do not overfill the compartments to allow air to circulate.
- Place frozen food in the refrigerator section to defrost.
- Keep drawers and shelves arranged as they were when the appliance was delivered.

Guide to the appliance

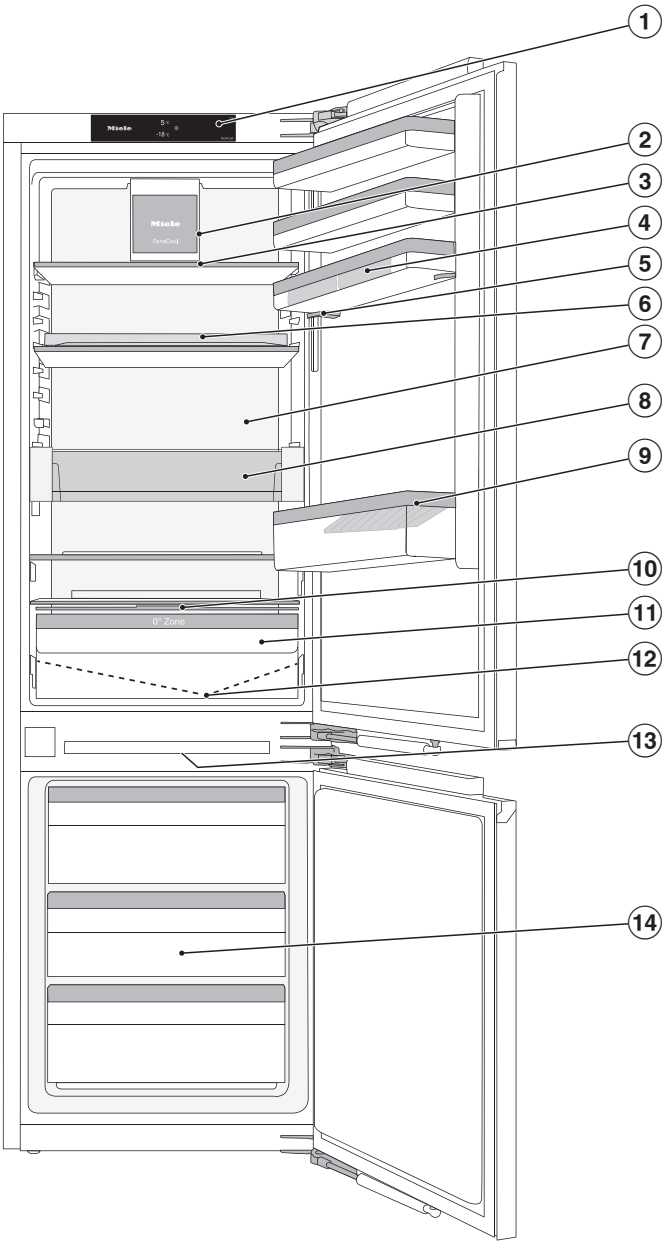

① Display
② Fan with lighting
③ Adjustable shelf with lighting (FlexiLight 2.0)
④ Egg tray
⑤ Door shelf with fine adjustment
⑥ Adjustable shelf with pivotable glass shelf (FlexiTray)
⑦ Dry rear wall for preventing the formation of condensation
⑧ Drawer module (CompactCase) for storing small packages
⑨ Bottle shelf with bottle holder
⑩ Compartment cover for setting the humidity level in the DailyFresh drawer
⑪ DailyFresh drawer for fruit and vegetables (humidity-controlled)
⑫ Condensate channel and drain hole
⑬ Freezer section interior lighting
⑭ Freezer drawers

Guide to the appliance

Display

The display can be scratched by pointed or sharp objects, e.g. pens.
Only touch the display with your fingertips.
It is possible that the display will not react to finger contact if your fingers are cold.

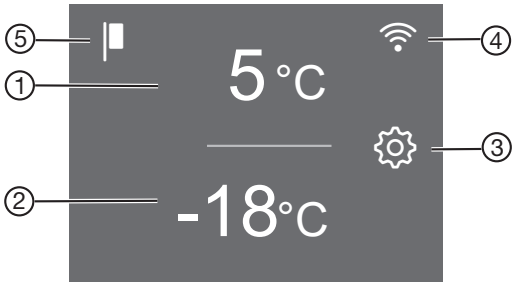

① Temperature display for the refrigerator section

② Temperature display for the freezer section

③ Settings mode sensor ⚙
For adjusting various functions in Settings mode

④ Display for Miele@home connection status
(only visible when the Miele@home function has been set up)

⑤ Demo mode display
(only visible when the Demo mode function has been switched on)

Using the appliance

- Touch the area/symbol you want on the touch display.
- Swipe left or right across the display until the value/symbol you want is shown in the middle.
- Tap on the option you want in the display to confirm.

The selected value/symbol will light up orange (except for a few exceptions).

- To leave the Settings level, tap on ⮌ or *OK*.

Settings mode

In Settings mode, you can select the following appliance functions and alter their settings to some extent:

Symbol	Function	Factory default setting
	Switching the Party mode function on or off (see “Selecting further settings”)	Off
	Switching the Holiday mode function on or off (see “Selecting further settings”)	Off
	Switching the lock function on or off (see “Selecting further settings”)	(Off)
	Switching the refrigeration appliance off (see “Switching on and off”)	
	Switching the Sabbath mode function on or off (see “Selecting further settings”)	Off
	Calling up information on the Sabbath mode function	—
	Changing the time before the door alarm is triggered (see “Selecting further settings”)	1:00
	Changing over the cooling circuit (technical measurement function, not relevant for the customer)	Off
	Setting up the Miele@home function for the first time, activating and deactivating Wi-Fi, or resetting the network configuration (see “Selecting further settings”)	APP
/	Switching the keypad tone on or off	On
/	Changing the volume of the alarms and buzzers or switching them off entirely (see “Selecting further settings”)	On /Level 5
	Changing the display brightness (see “Selecting further settings”)	Level 4

°C / °F	Changing the temperature unit (°Celsius or °Fahrenheit)	°C
	Switching the Demo mode function off (only visible when switched on) (see “Selecting further settings”)	Off
	Resetting to default settings (see “Selecting further settings”)	—
i	Call up information (model identifier and serial number) about your refrigeration appliance (see “Selecting further settings”)	—
	Switching on the reminder to change the charcoal filter (see “Optional accessories”) (see “Selecting further settings”)	Off
	Switching Cleaning mode on or off (see “Cleaning and care” and “Selecting further settings”)	Off

Adjusting the interior fittings

Using the door shelf fine adjustment

Use the fine adjustment if you need a different height clearance on the door shelf/bottle shelf.

You can adjust the height of the door shelf while it is loaded.

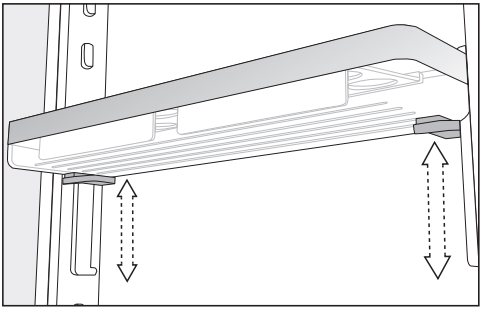

- Hold the door shelf in both hands, press the grey buttons on both sides under it and move it.

Repositioning the door shelf with fine adjustment

Only move the door/bottle shelves in the appliance door when they are empty.

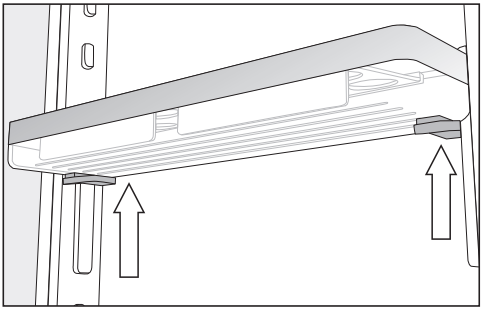

- Take hold of the sides of the door shelf with both hands so that you are touching each of the grey buttons underneath it.
- Press the grey buttons at the same time and slide the door shelf up and off the guide rails.

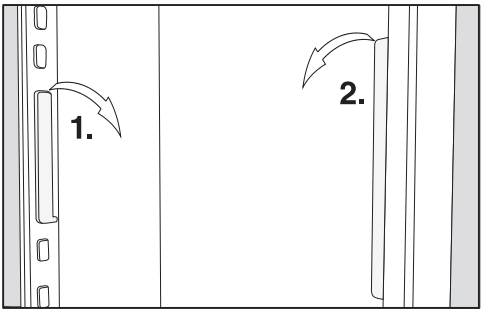

- Remove the guide rail from the lugs and move it to the desired position.
- Move the second guide rail parallel to the first rail.
- Push the shelf down onto the guide rails.

Moving the door/bottle shelf

Only move the door/bottle shelves in the appliance door when they are empty.

- Push the door/bottle shelf upwards, then remove it by pulling it forwards.
- Refit the door/bottle shelf at the required height.

Clipping the egg trays on

- Clip the egg trays onto the rear edge of the door shelf.

Adjusting or removing the bottle holder

The non-slip fins of the bottle holder make bottles more secure when you open and close the appliance door.

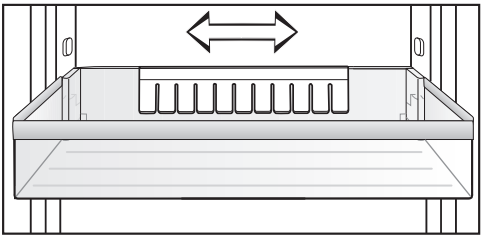

The bottle holder can be moved to the left or right to create more room for drink cartons.

The bottle holder can be removed completely, e.g. for cleaning:

- Pull the bottle holder up to remove it.

Moving an adjustable shelf/adjustable shelf with lighting

The shelves can be adjusted according to the height of the food.

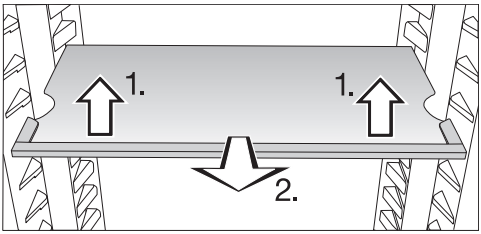

- Raise the shelf slightly at the front and pull it forwards a little.
- Lift it until the notches at the side are in line with the shelf supports. The shelf can then be raised or lowered to the required level.
- Push the shelf in.

Make sure that the shelf with lighting clicks into position.

Stoppers prevent the shelves from being dislodged by mistake.

Moving the adjustable shelf with pivotable glass shelf (FlexiTray)

⚠ Risk of damage caused by loading too much food and not distributing items evenly.

Loading too much food and not distributing items evenly can damage the pivotable glass shelf.

Do not exceed the maximum load size of 8 kg. Arrange food items evenly across the full surface of the shelf.

The pivotable glass shelf can be turned 180°, improving access to the food placed at the back.

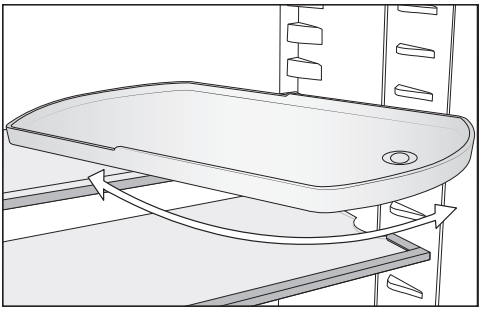

⚠ Danger of injury from dropping the glass shelf.

The pivotable glass shelf can come out when removing the adjustable shelf, causing the glass shelf to drop out of the tray and break.

Keep hold of the pivotable glass shelf when removing the adjustable shelf.

You can move the adjustable shelf with pivotable glass shelf as you wish.

Moving the storage drawer (CompactCase)

- Pull the drawer out as far as it will go. Tilt the drawer up slightly and remove the drawer.

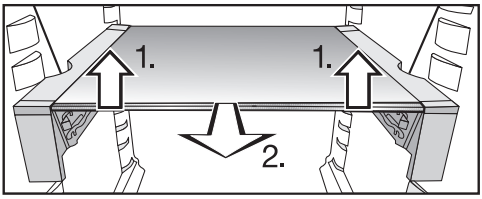

- Use both hands to slightly lift the storage surface including the holder at the front 1). Pull the storage surface forwards a little 2.) and lift the storage surface with the recesses on the left and right over the shelf supports.
- Move the shelf up or down as needed.
- Push the shelf to the back as far as it will go.
- Insert the drawer from above into the upper or lower guide in the holder as required.

Moving the charcoal filters

KKF-FS charcoal filters with holder (Active AirClean) are available as optional accessories (see “Optional accessories”).

When you are storing very strong smelling food (e.g. very ripe cheese):

- Place the holder with the charcoal filters on the shelf where this food is kept.
- Change the charcoal filters sooner if necessary.
- Use more charcoal filters (with holders) in the appliance (see “Optional accessories”).

The holder for the charcoal filters sits on a protective strip at the back of the shelf.

- To move the charcoal filters, pull the holder upwards to remove it from the protective strip.
- Then pull the protective strip off the shelf.
- Refit the protective strip on the shelf you wish to use it on.

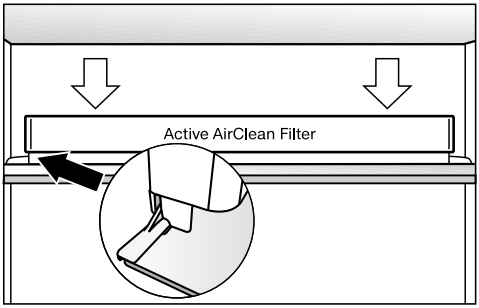

- Refit the holder on the protective strip.

Accessories supplied

Adjustable shelf with pivotable glass shelf (FlexiTray)

Egg tray

Bottle holder

Ice cube tray

Optional accessories

A range of useful Miele accessories and care products is available for your appliance.

Miele all purpose microfibre cloth

Light soiling and fingerprints on stainless steel fronts, control panels and furniture can be easily removed with this microfibre cloth.

KKF-FS charcoal filter with holder (Active AirClean)

Charcoal filters neutralise unpleasant odours in the refrigerator section for improved air quality.

KKF-RF replacement charcoal filters (Active AirClean)

Replacement filters to fit the holder are available. We recommend replacing the charcoal filters every 6 months.

Flexible bottle rack

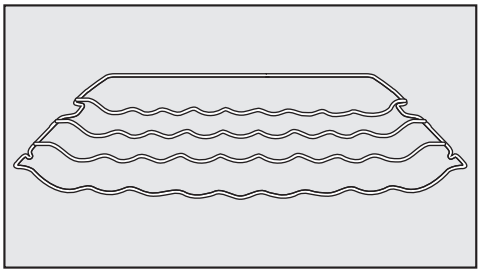

Bottles can be stored horizontally in the refrigerator section using the bottle rack to save space.
The bottle rack can be placed in different positions in the refrigerator section.

Adjustable shelf with pivotable glass shelf (FlexiTray)

For a description, see “Guide to the appliance – Adjusting the interior fittings”.

Optional accessories can be ordered from the Miele webshop. They can also be ordered directly from Miele (see end of this booklet for contact details).

Before using for the first time

- Remove all packaging material and protective film.
- Clean the inside of the appliance and the accessories (see “Cleaning and care”).

Connecting the appliance

- Connect the appliance to the electricity supply as described in "Electrical connection".

Miele will then appear in the appliance display, followed by ⏻.

Switching on the appliance

- Open the appliance door.
- Tap ⏻ on the display.

The refrigeration appliance will start to cool and the interior lighting will come.

When the set freezer temperature is reached, the symbol disappears, the temperature display of the freezer lights up constantly and the alarm stops.

- If the alarm annoys you, tap .

The alarm will stop.

The refrigeration appliance will gradually reach the preset temperatures.

To enable the temperature to get sufficiently cold inside the refrigeration appliance, allow the appliance to run for a few hours. Do not place food in the refrigeration appliance until it has reached the preset temperature.

Do not place food in the freezer section until it has reached the preset temperature (min. -18 °C).

Switching off the appliance

You can only switch the entire refrigeration appliance off in Settings mode ⚙.

- Tap ⚙.
- Swipe left or right until ⏻ is shown in the middle.
- Tap ⏻.

The cooling and interior lighting are switched off.

⏻ will appear in the display.

Please note: the refrigeration appliance is not disconnected from the power supply when it is switched off.

Switching off the refrigerator section separately

The refrigerator section can be switched off without having to switch off the freezer section. This is useful, e.g. while on holiday.

- Touch the temperature display for the refrigerator section.
- Swipe right until ⏻ is shown in the middle.
- Tap ⏻.

The temperature display for the refrigerator section will go out. ⏻ will appear in the display.

The refrigerator section is switched off.

The temperature display for the freezer section remains lit up.

Switching the refrigerator section back on again separately

- Tap ⏻ in the temperature display for the refrigerator section.
- Tap ⏻.

The refrigerator section switches back on.

Switching off for longer periods of time

If, during a long absence, the refrigeration appliance is switched off but not cleaned and the door is left shut, there is a danger of mould building up inside the appliance.
It is essential to clean the refrigeration appliance if it is not going to be used for a long time.

If the appliance is not going to be used for a longer period of time, observe the following:

- Switch the appliance off.
- Switch off at the wall and withdraw the plug from the socket, or switch off the mains circuit breaker.
- Clean the refrigeration appliance and leave the door ajar to air the appliance and avoid odours building up inside.

It is also advisable to carry out the last instruction if you are switching off only the refrigerator section for a longer period of time.

The correct temperature

It is very important to set the correct temperature to ensure the shelf life of food. Reducing the temperature reduces the growth rate of microorganisms. Food does not spoil as quickly.

The temperature in the appliance will rise:

- the more often the door is opened and the longer it is kept open.
- the more food is stored in it.
- the warmer the food is which is being put into it.
- the higher the ambient temperature surrounding the refrigeration appliance. This refrigeration appliance is designed for use within specific ambient temperatures (climate range). Do not use it in ambient temperatures for which it is not designed.

... in the refrigerator section

We recommend a temperature of **4 °C** in the refrigerator section.

... in the freezer section

To freeze fresh food, a temperature of **-18 °C** is required. This will prolong the storage life of your food and retain its quality.
As soon as the temperature rises above -10 °C, the bacteria become active in the food again so it cannot be kept as long. For this reason, partially defrosted or defrosted food must not be refrozen. Food may be refrozen once it has been cooked, as the high temperatures achieved during cooking destroy most bacteria.

Temperature display

In normal operation, the temperature display shows the **current average refrigerator section temperature** and the **maximum freezer section temperature**.

Depending on the ambient temperature and the temperature setting, it can take the appliance a few hours to reach the temperature required and for this temperature to then be shown constantly in the display.

Setting the temperature in the refrigerator/freezer sections

- Touch the temperature display for the section you want to change.
- Swipe left or right until the temperature you want is shown in the middle.
- Tap on the temperature you want to confirm.

The temperature display will then change back to the current refrigeration and freezer temperature in the refrigeration appliance.

Possible temperature settings

- Refrigerator section: 2 to 9 °C
- Freezer section: -15 to -26 °C

SuperCool ❄

When switched on, the SuperCool function ❄ can be used to rapidly reduce the temperature in the **refrigerator section** to its lowest setting (depending on the ambient temperature). The refrigeration appliance will work at full power and lower the temperature. Select this function for the rapid chilling of large amounts of fresh food or drink.

When the SuperCool function ❄ is switched on, the appliance may make more noise than usual.

The SuperCool function ❄ should be switched on **4 hours before** placing food or drinks in the refrigerator section.

The SuperCool function ❄ will switch itself off automatically after approx. 12 hours. The appliance will then run at normal power again.

Useful tip: To save energy, you can manually switch off the SuperCool function ❄ once food and drinks are sufficiently chilled.

Switching SuperCool ❄ on and off

- Touch the temperature display for the refrigerator section.
- Touch ❄ to switch the SuperCool function on and off again.

When the SuperCool function is **switched on**, ❄ will light up orange.

- Tap on the temperature display to leave the Settings level.

SuperFreeze ❄

When switched on, the SuperFreeze function ❄ can be used to rapidly reduce the temperature in the **freezer section** to its lowest setting (depending on the ambient temperature). The refrigeration appliance will work at full power and lower the temperature. Select this function before freezing fresh food. This helps food to freeze quickly and retain its nutrients, vitamins, flavours and appearance.

When the SuperFreeze function ❄ is switched on, the appliance may make more noise than usual.

SuperFreeze should be switched on approx. **6 hours before** placing food in the freezer section.
When freezing the **maximum amount of food**, the SuperFreeze function ❄ should be switched on **24 hours beforehand**.

The SuperFreeze function ❄ will switch itself off automatically after a maximum of 72 hours. The appliance will then run at normal power again. The quantity of fresh food placed in the freezer will determine the duration before it switches off.

Useful tip: To save energy, you can manually switch the SuperFreeze function off once food and drinks are sufficiently chilled.

You do not need to switch on the SuperFreeze function:

- when placing food in the freezer that is already frozen.
- when freezing only up to 2 kg fresh food daily.

Switching SuperFreeze ❄ on and off

- Touch the temperature display for the freezer section.
- Tap ❄ to switch the SuperFreeze function on and off again.

When the SuperFreeze function is **switched on**, ❄ will light up orange.

- Tap on the temperature display to leave the Settings level.

DynaCool

When the DynaCool function is not switched on, the natural circulation of air in the appliance will cause different temperature zones in the fridge, as the cold, heavy air will sink to the lowest section of the appliance. Make use of the different temperature zones when placing food in the refrigerator (see "Storing food in the refrigerator section").
However, if you are storing a large amount of similar food in the refrigerator at any one time, e.g. after your weekly shop, it is a good idea to switch on DynaCool. This way you can distribute the temperature on all the adjustable shelves inside the appliance more evenly so that all the food in the refrigerator section will be chilled to about the same degree.
The temperature can be set as usual with the temperature control.

Also switch on the DynaCool function when:

- the ambient temperature is high (above approx. 35 °C)
- the humidity levels are high (e.g. in the summer)

The fan will always switch on automatically when the compressor switches on.

Useful tip: As the energy consumption increases when DynaCool is switched on, you should switch the DynaCool function off again under normal conditions.

To save energy, the fan switches off automatically when the door is open.

Switching DynaCool on and off

- Touch the temperature display for the refrigerator section.
- Touch to switch the DynaCool function on and off again.

When the DynaCool function is **switched on**, will light up orange.

- Tap on the temperature display to leave the Settings level.

Explanation of the different settings

Only the settings that require further explanation are described below.

The door alarm and other warnings are automatically suppressed when you are in Settings mode ⚙.

Party mode

The Party mode function is recommended if you wish to chill or freeze large amounts of fresh food or drink quickly.

Useful tip: Switch on the Party mode function approx. 4 hours before placing food and drinks in the appliance.

When Party mode is switched on, the DynaCool, SuperCool and SuperFreeze functions are switched on automatically.

Party mode cannot be switched on if the refrigerator section is switched off or if Holiday mode is switched on.

The Party mode function will switch itself off automatically after approx. 24 hours. However, you can switch the Party mode function off early at any time.

Holiday mode

The Holiday mode function is useful when you go on holiday, for example, if you do not wish to switch off the refrigerator section completely or do not need a high degree of cooling.

If Holiday mode is switched on, this will be indicated in the start display. It can be switched off via the start display or Settings mode ⚙.

The refrigerator section is regulated to a temperature of 15 °C. In this way, the refrigerator section remains in operation whilst saving energy.

The freezer section remains switched on at the previously set temperature.

Food which does not go off quickly can be stored in the refrigeration appliance for some time at this moderate refrigerator temperature. Energy consumption is lower than in normal operation.
This also prevents the build-up of odours and mould, which can occur if the refrigerator section is switched off and the appliance door is closed.

⚠ Health risk due to consumption of spoiled food.

The shelf life and quality of food in the refrigerator section may deteriorate if the temperature remains above 4 °C for an extended period.

Only ever switch on the Holiday mode function for a limited period.

Do not store any temperature-sensitive food which goes off easily such as fruit, vegetables, fish, meat and dairy products during this time.

Switching the lock function on

When the lock function is switched on, it protects the refrigeration appliance from being switched off unintentionally and being adjusted unintentionally by unauthorised persons, e.g. children.

■ Tap ⚙.

- Swipe left or right until 🔓 is shown in the middle.
- Tap 🔓.

When the lock function is switched on, 🔒 will light up orange.

- Close the appliance door. Only then will the lock function 🔒 be active.

Deactivating the lock function 🔒/🔓 temporarily

If you want to adjust the temperature, for example, you can deactivate the lock function temporarily:

- Touch the temperature display for the section you want to adjust.
- Touch 🔒 for approx. 6 seconds.

The display switches to the temperature controls.

- Now select the required settings.

Closing the appliance door will reactivate the lock function 🔒.

Switching the lock function 🔒/🔓 off completely

- Tap ⚙.
- Touch 🔒 for approx. 6 seconds.
- Swipe left or right until 🔒 is shown in the middle.
- Tap 🔒.

When the lock function is switched off, 🔓 will light up.

Sabbath mode

The appliance offers a Sabbath mode for the purpose of religious observance.

If Sabbath mode is switched on, this will be indicated in the start display.

The display switches off after 3 seconds.

When Sabbath mode is switched on, you cannot adjust any settings on your refrigeration appliance.

Ensure that the appliance doors are properly closed, as visual and audible alarms are switched off.

The Sabbath mode function will switch off automatically after approx. 120 hours.

When Sabbath mode is switched on, the following are deactivated:

- The interior lighting when the door is opened.
- All audible and visual signals.
- The temperature display.

All other functions switched on previously remain activated.

⚠ Health risk due to consumption of spoiled food.

As power failures are not indicated while Sabbath mode is active, food may be exposed to increased temperatures for a certain period of time. This shortens the shelf life of the food.

If there is a power failure during Sabbath mode, check the quality of the food.

Switching Sabbath mode off

- Tap on the black display.

will appear in the display.

- Tap .

lights up orange.

- Tap on the symbol in Settings mode .

When Sabbath mode is switched off, the symbol will light up white.

Changing the time before the door alarm is triggered

You can set how quickly the door alarm should sound after an appliance door has been opened.

- Tap .
- Swipe left or right until is shown in the middle.
- Tap .
- Swipe left or right until the time you want between 30 seconds and 3 minutes 30 seconds is shown in the middle.
- Tap on the setting you want to confirm.

Miele@home

Your refrigeration appliance is equipped with an integrated Wi-Fi module.

Networking is deactivated at the factory.

To use this feature, you will need:

- a Wi-Fi network
- the Miele App
- a Miele user account. You can create a user account via the Miele App.

The Miele App will guide you as you connect your refrigeration appliance to your home Wi-Fi network.

Once the refrigeration appliance is connected to your Wi-Fi network, you can use the App to carry out the following activities, for example:

- Call up information on the operating status of your refrigeration appliance
- Change the settings on your refrigeration appliance

Connecting your refrigeration appliance unit to your Wi-Fi network will increase energy consumption, even when the appliance is switched off.

Make sure that the signal of your Wi-Fi network is sufficiently strong in the area where you want to set up your refrigeration appliance.

Availability of the Wi-Fi connection

The Wi-Fi connection shares a frequency range with other appliances (including microwave ovens and remote control toys). This may result in sporadic or even complete connection failures. Therefore, a constant availability of featured functions cannot be guaranteed.

Miele@home availability

The ability to use the Miele App depends on the availability of the Miele@home service in your country.

The Miele@home service is not available in every country.

For information about availability, please visit www.miele.com.

Miele App

You can download the Miele App from the Apple App Store® or the Google Play Store™ free of charge (only functional in selected countries).

Download on the App Store

ANDROID APP ON Google Play

Setting up Miele@home for the first time

- Tap ⚙.
- Swipe left or right until @ is shown in the middle.
- Tap @.
- Tap on the connection method you wish to use (App or WPS).

After you have successfully logged in, ᯤ will appear in the start display.

If a connection could not be created, ⊗ will appear.

- In this case, start the process again.

Deactivating or activating the Wi-Fi connection

- Tap ⚙.
- Swipe left or right until @ is shown in the middle.
- Tap @.
- Tap ᯤ to deactivate the Wi-Fi connection.

ᯤ will appear in the display.

- Tap ᯤ to reactivate the Wi-Fi connection.
- Tap ⮌ to exit the menu level.

When the Wi-Fi connection is active, ᯤ will light up in the start display.

Resetting the network configuration

- Tap ⚙.
- Swipe left or right until @ is shown in the middle.
- Tap @.
- Swipe right until ⟲ is shown in the middle.
- Tap ⟲.
- Tap OK.

All entered settings and values for Miele@home are reset to the default settings.

The Wi-Fi connection has been deactivated. ᯤ will go out in the start display.

Reset the network configuration if you are disposing of or selling your refrigeration appliance, or if you are putting a used refrigeration appliance into operation. All personal data is removed from the refrigeration appliance. This will also ensure that a previous owner is no longer able to access the appliance.

Changing the volume of the alarms and buzzers

You can change the volume of the alarms and buzzers (e.g. in the event of a door alarm or a fault message). Alternatively, you can switch the alarms and buzzers off if you find them annoying.

- Tap .
- Swipe left or right until is shown in the middle.
- Tap .
- Select the desired volume by swiping the segment bar to the left or right.
- Confirm the volume you want by tapping on the segment bar.

When the alarms and buzzers are switched off, will appear.

Adjusting the display brightness

You can adjust the display brightness to suit the lighting conditions in the room.

- Tap .
- Swipe left or right until is shown in the middle.
- Tap .
- Select the desired brightness level by swiping left or right on the segment bar.
- Confirm the brightness you want by tapping on the segment bar.

Switching off Demo mode

Demo mode allows the refrigeration appliance to be presented in the showroom without the cooling system being switched on. Do not activate this setting for domestic use.

If Demo mode has been switched on as a default setting, will appear in the start display.

- Tap .
- Tap .
- Swipe left or right until is shown in the middle.
- Tap .

After Demo mode has been switched off, the refrigeration appliance shuts down and must be switched on again.

Resetting the settings to their factory default settings

All settings made on the refrigeration appliance will be reset to the factory default settings (for settings, see “Guide to the appliance”).

- Tap .
- Swipe left or right until is shown in the middle.
- Tap .

will appear in the display.

- Touch *OK*.

The refrigeration appliance shuts down and must be switched on again.

Information i

Appliance data (model number and serial number) is shown in the display.

Keep this appliance data to hand:

- For integrating the refrigeration appliance into your Wi-Fi network (see “Selecting further settings – Miele@home”) (depending on model).
- When reporting an appliance fault to Miele (see “Service”).

Charcoal filter change indicator

After inserting the charcoal filter (optional accessory), you must activate the charcoal filter change indicator in Settings mode.

The charcoal filter change indicator in the start display will remind you to replace the charcoal filter approx. every 6 months (see “Cleaning and care – Replacing the charcoal filters”).

Cleaning mode

Cleaning mode makes it easier to clean the refrigerator section (see “Cleaning and care”). The interior lighting remains switched on, even though the refrigerator section is switched off. The buzzer will stop and the symbols in the display will also go out.

If Cleaning mode is switched on, this will be indicated in the start display.

After cleaning, Cleaning mode must be switched off. If the appliance door is closed for more than 10 minutes, Cleaning mode switches itself off automatically.

Temperature and door alarm

⚠ Health risk due to consumption of spoiled food.
If the temperature in the freezer remains above -18 °C for a long time, the frozen food may start to defrost. This shortens the shelf life of the food.
Check whether the frozen food has started to defrost. If it has, check that the food is safe to use and if it is, use it as soon as possible or cook it before freezing it again.

Temperature alarm

The refrigeration appliance is equipped with a temperature alarm so that the temperature in the freezer section cannot rise unnoticed.

If the temperature in the freezer section becomes too warm, will light up red in the freezer section temperature display.
An alarm will also sound until the cause of the alarm is rectified or the alarm is switched off.

The temperature the appliance is set at determines the temperature the appliance recognises as being too warm.

The audible and visual signals may be activated in the following situations:

- The appliance is switched on and the temperature in the appliance differs greatly from the set temperature.
- A lot of warm room air enters the freezer as you are rearranging or taking out frozen goods.
- You are freezing large amounts of food at once.
- You are freezing warm food.
- There was a power outage.
- The appliance has a fault.

Before you switch the temperature alarm off, you must determine the cause and rectify it.

You can switch the alarm off early if you wish.

■ Tap .

The alarm message is confirmed:  goes out and the alarm stops.

The start screen appears in the display: the warmest temperature recorded in the freezer section will flash in the display for about 1 minute. Then the temperature display will change to the current temperature in the freezer section.

Door alarm

The refrigeration appliance is equipped with a warning system to avoid increased energy consumption and food becoming warm if the appliance door is left open.

If an appliance door is left open for a longer period of time, ⚠ will light up yellow in the relevant temperature display. An alarm tone also sounds.

You can change the time before the door alarm is triggered. However, the door alarm can also be switched off (see “Selecting further settings”).

The alarm will stop and ⚠ will go out in the display as soon as the door is closed.

Switching the door alarm off early

You can switch the alarm off early if you wish.

- Touch ⚠ in the display.

The alarm will stop and the ⚠ symbol will go out.

If the appliance door is not closed, the alarm will sound again after 3 minutes.

If there is insufficient air circulation, the cooling performance will decrease and energy consumption will increase.

To allow air to circulate efficiently, do not pack food too closely together in the appliance.

Do not cover the fan in the rear wall of the appliance.

Different storage zones

Due to the natural air circulation, there are different temperature zones in the refrigerator section.

Cold, heavy air sinks to the lowest section of the refrigerator section. Make use of the different zones when placing food in the appliance.

This appliance has dynamic cooling, which helps to keep an even temperature when the fan is running. The difference between the various temperature zones is therefore less pronounced.

Warmest area

The warmest area is located in the top section of the main storage area and the door. Use this for storing butter so that it remains spreadable and for cheese so that it retains its flavour.

Coldest area

The coldest area in the refrigerator section is directly above the DailyFresh drawer and at the back of the appliance.

A temperature setting of 4 °C combined with appropriate hygiene measures delays the propagation of bacteria, e.g. salmonella and listeria, which can lead to serious food poisoning.

Therefore, you should use these areas to store all delicate and highly perishable food, including:

- fish, meat, poultry
- sausage products, ready meals
- dishes or baked goods containing eggs or cream
- fresh dough, cake mixtures, pizza or quiche dough
- soft cheese and other dairy products
- hummus, vegetable spreads, plant-based cream cheese substitutes
- pre-packed vegetables
- other fresh food (with a label stating it should be kept at a temperature of approx. 4 °C)

Food which is not suitable for storage in the refrigerator

Not all food is suitable for refrigeration at temperatures below 5 °C because it is sensitive to cold.

Foods which are sensitive to cold include:

- Pineapples, avocados, bananas, pomegranates, mangoes, melons, papayas, passionfruit and citrus fruits such as lemons, oranges, mandarines, grapefruits
- Fruit (which is not yet ripe)
- Eggplants, cucumbers, potatoes, capsicums, tomatoes, zucchini
- Hard cheeses, e.g. Parmesan, mountain cheese

Notes on buying food

The freshness of the food when it is first placed in the appliance is the most important factor for how long it stays fresh.
Take into account the use-by date and the correct storage temperature.
Time out of the refrigerator, e.g. transporting food in a warm car, should be kept to a minimum.

Storing food in the refrigerator section

Storing food correctly

Ensure that food stored in the refrigerator section is in packaging or covered properly (some exceptions apply in the DailyFresh drawer). This will prevent food odours from affecting other food, stop food from drying out, and also prevent any cross-contamination of bacteria. This is particularly important when storing meat products. Make sure that food such as raw meat and fish in particular does not come into contact with other food.

By ensuring that the temperature settings are correct and by taking appropriate hygiene measures, you can prolong the storage life of your food considerably. This prevents food waste.

Protein rich food

Please note that foods rich in protein deteriorate faster than others. Shellfish, for example, deteriorates faster than fish, and fish deteriorates faster than meat.

The DailyFresh drawer provides good storage conditions for fruit and vegetables.

The humidity level in the DailyFresh drawer can be regulated to suit the food being stored. Food retains its own moisture if stored at a higher humidity and does not dry out as quickly. The temperature is approximately equivalent to the temperature in the refrigerator section.

Remember that the freshness of the food when first placed in the appliance is the most important factor in determining how long it will stay fresh.

Adjusting the humidity level in the DailyFresh drawer for fruit and vegetables

The moisture level greatly depends on the type and quantity of food being stored, if stored unwrapped.
If the quantity of food being stored in this compartment is small, the humidity level may be too low.

Useful tip: If you are only storing a small amount of food, wrap it in airtight packaging.

Selecting low humidity ◊

The appliance is delivered with increased humidity and the compartment cover pushed backwards ◊◊◊.

Only change this default setting if the humidity level in the DailyFresh drawer is too high.

■ Open the DailyFresh drawer.

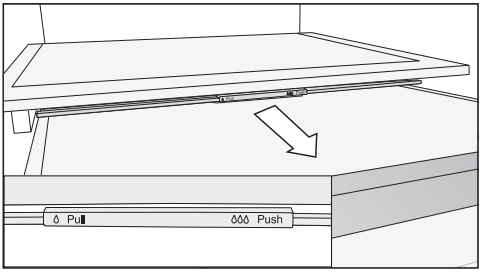

■ Pull the compartment cover forwards as far as it will go.

The compartment cover is open and the humidity decreases ◊.

Selecting increased humidity ◊◊◊

■ Open the DailyFresh drawer.

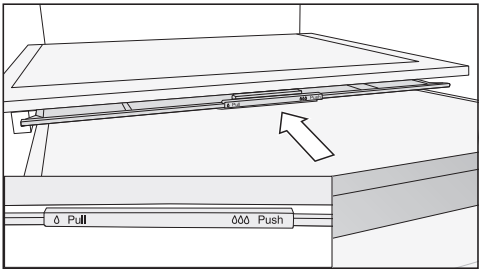

■ Slide the compartment cover backwards as far as it will go.

The compartment cover is closed and the humidity remains in the compartment ◊◊◊.

Storing food in the DailyFresh drawer

Observe the following tips if you find that food you have stored does not keep well (e.g. food becomes limp or wilts after only being stored for a short time):

- Only place fresh food in the appliance. The initial condition of the food is crucial to maintaining freshness.
- Clean the DailyFresh drawer before storing food in it.
- Dry the surface of very moist food before storing it.
- Do not store food which is sensitive to cold in the DailyFresh drawer (see “Storing food in the refrigerator section – Food which is not suitable for storage in the refrigerator”).
- Set the compartment cover to the correct position for the food being stored (low humidity ◊ or humidity increased ◊◊◊).
- An increased humidity level ◊◊◊ in the humidity-controlled compartment is achieved with the moisture present in the food being stored if it is stored unwrapped. The more food stored in the compartment, the higher the humidity.
- If too much moisture collects in the compartment at the ◊◊◊ setting and the food is affected, dry the floor and place a rack or similar item in the compartment so that excess moisture can drip down. Alternatively, reduce the humidity ◊ by pulling the compartment cover forwards.
- If the humidity level is too low despite the ◊◊◊ setting, wrap the food in airtight packaging.

Freezing fresh food

⚠ Health risk due to consumption of spoiled food.
If the temperature in the freezer remains above -18 °C for a long time, the frozen food may start to defrost. This shortens the shelf life of the food.
Check whether the frozen food has started to defrost. If it has, check that the food is safe to use and if it is, use it as soon as possible or cook it before freezing it again.

Fresh food should be frozen as quickly as possible so that the nutritional value of the food, its vitamin content, appearance and flavour are maintained.

If food is frozen quickly, the cells have less time to lose moisture, so they shrink significantly less. As there is not so much moisture loss, it is easier for the food to reabsorb it during the defrosting process, and very little water collects around the defrosted food.

Storing frozen food

When buying frozen food to store in your freezer, make sure to check:

- that the packaging is not damaged.
- the use-by date.
- that the temperature at which the frozen food is being stored in the shop is -18 °C or colder.

■ Where possible, transport frozen food in an insulated bag and then store it quickly in the refrigeration appliance.

Home freezing

Before placing food in the appliance

- When freezing more than 2 kg of fresh food, switch on the SuperFreeze function ❄ 6 hours before placing the food in the freezer.
- When freezing even larger amounts of food, switch on the SuperFreeze function ❄ 24 hours before placing the food in the freezer.

This helps food which is already stored in the freezer to stay frozen.

- Only freeze food which is fresh and in good condition.

Please note that some food is not suitable for freezing. These include, for example, vegetables that are usually eaten raw, such as lettuce or radishes.

Useful tip: To retain colour, taste, aroma, and vitamin C, vegetables should be blanched before they are frozen. To blanch, immerse the trimmed and washed vegetables in boiling water for 2-3 minutes. Remove and plunge into ice-cold water to cool quickly. Drain and pack ready for freezing.

Packaging food for freezing

- Freeze food in portions.

Useful tip: Use suitable packaging to avoid freezer burn (such as freezer containers).

- Expel as much air as possible from the packaging and close it tightly.
- Label the packaging with the contents and the date of freezing.

Placing food in the freezer

⚠ Risk of damage due to heavy loads.
Loading food which is too heavy can cause damage to the freezer drawers/glass shelves.
Do not exceed the relevant maximum load:
Freezer drawer = 12 kg
Glass shelf = 35 kg

Unfrozen food should not touch frozen food as this will cause the frozen food to begin to thaw.

- To prevent food sticking together when frozen, make sure that the packaging and containers are dry.

To ensure that food freezes through to the core quickly, do not exceed the following packaging and container sizes:

- Fruit and vegetables: max. 1 kg
- Meat: max. 2.5 kg

- Freezing small amounts of food

Freeze small items in the upper freezer drawers.

- Place the food flat in the bottom of the **upper** freezer drawers so that it freezes through to the core as quickly as possible.

– VarioRoom: freezing the maximum amount of food

If the ventilation slots are blocked, the cooling performance will decrease and energy consumption will increase.
When placing food in the freezer, make sure that the ventilation gaps are not blocked.

Useful tip: You can expand the space available in the freezer. If you wish to freeze large items such as a turkey or game, you can remove the glass shelves between the freezer drawers. To do this:

- Remove the upper freezer drawers.
- Place the food flat on the upper glass shelves so that it freezes through to the core as quickly as possible.

After the initial freezing process:

- Switch the SuperFreeze function ❄ off.
- Place the frozen food in the freezer drawers and push them back in.

Storage time for frozen food

Food group	Storage time (months)
Ice cream	2 to 6
Bread, baked goods	2 to 6
Cheese	2 to 4
Fish, oily	1 to 2
Fish, lean	1 to 5
Sausage, ham	1 to 3
Game, pork	1 to 12
Poultry, beef	2 to 10
Vegetables, fruit	6 to 18
Herbs	6 to 10

The storage times given are guidelines only.

Where the storage time given on the packaging differs, follow the advice on the packaging.

By keeping the freezer at a constant temperature of -18 °C and taking appropriate hygiene measures, you can maximize the storage life of your food and avoid food waste.

Cooling drinks quickly

To cool drinks quickly in the refrigerator section, switch on the SuperCool function ❄.

If you want to cool a large amount of drinks, or if you want to cool drinks in the freezer section, select Party mode in Settings mode ⚙.

When cooling drinks quickly in the freezer, make sure bottles are not left in for **more than one hour**. Otherwise they could burst, causing injury or damage.

Refrigerator section and DailyFresh drawer

The refrigerator section and the DailyFresh drawer defrost automatically.

Condensate and frost can build up on the back wall of the refrigerator section while the compressor is running. You do not need to remove this.

The condensate drains through a channel and drain hole into an evaporation system at the back of the refrigeration appliance. The warmth generated by the compressor causes the condensate to evaporate automatically.

Keep the condensate channel and drain hole clean to enable this. Condensate must be able to drain away unhindered at all times.

Freezer section

The appliance is equipped with a "NoFrost" system. The freezer defrosts automatically.

The moisture generated in the appliance collects on the evaporator and is automatically defrosted and dissipated from time to time.

This automatic defrosting system enables the freezer to remain permanently ice-free. Food stored in the freezer will not defrost with this system.

The data plate located inside the refrigeration appliance must not be removed. It contains information which is required in the event of a fault.

Do not let water get into the electronic unit or the lighting.

⚠ Risk of damage due to moisture ingress.
The steam from a steam cleaning appliance can damage plastic parts and electrical components.
Do not use a steam cleaning appliance to clean the refrigeration appliance.

Cleaning water must not get into the drain hole.

Cleaning agents

Cleaning and conditioning agents used in the interior of the refrigeration appliance must be food safe.

To avoid damaging the surfaces of your appliance, **do not use:**

- cleaning agents containing soda, ammonia, acid or chloride
- cleaning agents containing descaling agents
- abrasive cleaning agents, e.g. powder cleaners and cream cleaners
- solvent-based cleaning agents
- stainless steel cleaning agents
- dishwasher cleaners
- oven sprays
- glass-cleaning agents
- hard, abrasive sponges and brushes, e.g. pot scourers
- dirt eraser sponges
- sharp metal scrapers

We recommend using lukewarm water with a little washing-up liquid to clean the appliance.

Preparing the refrigeration appliance for cleaning

Cleaning the refrigerator section only:

Switch Cleaning mode on. The cooling system in the refrigerator section is switched off, but the interior lighting remains switched on.

- Tap .
- Swipe left or right until is shown in the middle.
- Tap .
- To leave this Settings level, tap .

If Cleaning mode is switched on, this will be indicated in the start display.

- Take any food out of the refrigerator section and store it in a cool place.
- Take out any removable accessories for cleaning (see “Removing and dismantling accessories for cleaning”).

Cleaning the freezer section/the entire refrigeration appliance:

- Switch the appliance off.

appears in the display and the cooling system is switched off.

- Take any food out of the freezer section/refrigeration appliance and store it in a cool place.
- Take out any removable accessories for cleaning (see “Removing and dismantling accessories for cleaning”).

Cleaning the interior of the machine

Clean the appliance regularly, or at least once a month.

If soiling is left on for any length of time, it may become impossible to remove under certain circumstances.
Surfaces may suffer discolouration or damage.
Remove any soiling immediately.

- Clean the **interior** with a clean sponge, lukewarm water and a little washing-up liquid.
- After cleaning, wipe with a damp cloth and dry with a soft cloth.
- Clean the condensate channel and drain hole frequently using a cotton swab or similar item to ensure that condensate can drain away freely.
- Leave the door open to air the refrigeration appliance sufficiently for a short while and to prevent odour build-up.

Cleaning accessories by hand or in the dishwasher

The following components must be cleaned **by hand** only:

- The stainless steel trims or strips.
- Door shelf with fine adjustment.
- Adjustable shelf with printing
- The rear protective strip and the side supports of the storage drawer (CompactCase)
- All drawers and compartment covers (these vary depending on model)
- The plastic parts of the adjustable shelf with pivotable glass shelf (FlexiTray).
- the flexible bottle rack (available as an optional accessory).
- Organisation box (available as an optional accessory)

The following components are **dishwasher-safe**:

⚠ Risk of damage due to high dishwasher temperatures.
Parts of the refrigeration appliance may become unusable, e.g. deform, if they are washed in the dishwasher at more than 55 °C.
For dishwasher-safe components, always select dishwasher programs with a maximum temperature of 55 °C.

Contact with natural dyes from carrots, tomatoes, and ketchup, etc. may discolour the plastic parts in the dishwasher. This discolouration does not affect the stability of the parts.

- The bottle holder, egg tray, ice cube tray

- Shelves and bottle shelves in the appliance door (without stainless steel trim).
- The guide rails for the door shelf with fine adjustment.
- The adjustable shelves (with the trim removed and without the printing)
- The glass shelves (without protective trims)
- The holder for the charcoal filter (optional accessory)

Removing and dismantling accessories for cleaning

Removing the door shelf with fine adjustment

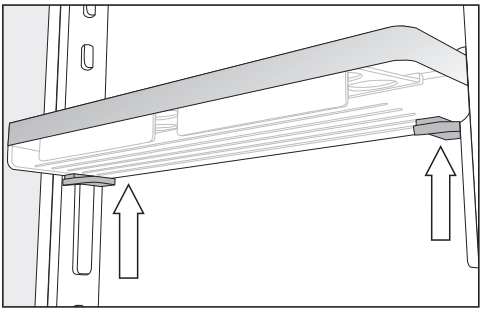

- Hold the door shelf in both hands, press the grey buttons on both sides under it, and slide it up off the guide rails.
- Remove the guide rail from the lugs.
- Once you have cleaned it, move the guide rail to the desired position and place the second guide rail parallel to the first rail on the opposite side.
- Push the shelf back down onto the guide rails.

Dismantling the door shelf/bottle shelf

Remove the stainless steel trim before cleaning the door shelf/bottle rack in a dishwasher.

To remove the stainless steel trim, proceed as follows:

- Place the door shelf/bottle rack on the worktop.

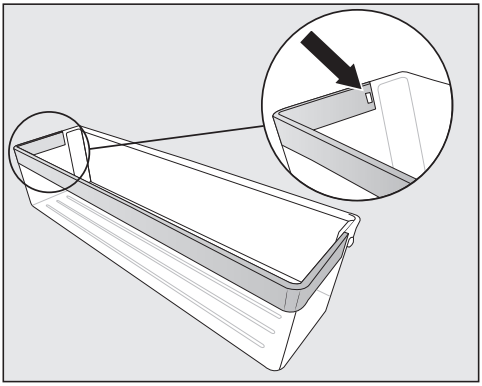

- Press the retainer out of the recess. The entire stainless steel trim will then come off the shelf.
- After cleaning, reattach the stainless steel trim in reverse order.

Dismantling the adjustable shelf/ adjustable shelf with lighting

⚠ Risk of damage due to incorrect cleaning.
The stainless steel strip with LED lighting will be damaged if you place it in water for cleaning.
Clean the stainless steel strip with LED lighting with a damp cloth.

Remove the stainless steel strip or stainless steel strip with LED lighting before cleaning the adjustable shelf.

- Place the adjustable shelf on a soft surface (e.g. a tea towel) with the top side facing downwards.

⚠ Risk of damage due to incorrect handling.
When you remove the stainless steel strip with LED lighting, the metal contacts can be damaged.
These contacts in the front left corner supply power to the LED lighting. Ensure that you always loosen the side on which the contacts are not located first.

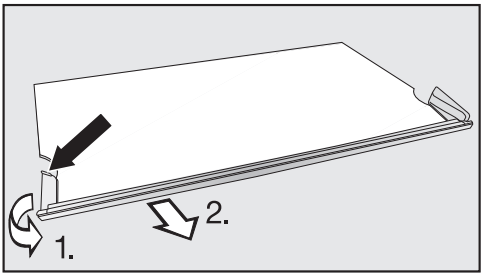

- Grasp the plastic surround on the left-hand side of the stainless steel strip at its rearmost point.

1. Pull the plastic surround from the adjustable shelf and
2. Pull the strip off at the same time. The opposite side will also be released.

- After cleaning, reattach the stainless steel strip by following the same procedure in reverse.

Dismantling the adjustable shelf with pivotable glass shelf (FlexiTray)

⚠ Danger of injury from dropping the glass shelf.
The pivotable glass shelf can come out when removing the adjustable shelf, causing the glass shelf to drop out of the tray and break.
Keep hold of the pivotable glass shelf when removing the adjustable shelf.

- Place the adjustable shelf with pivotable glass shelf on a worktop covered with a soft material (e.g. a tea towel).

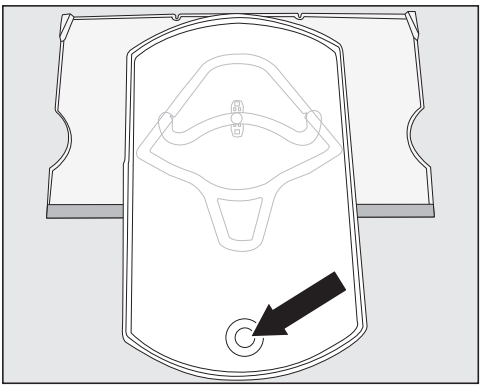

- Bring the tray to the front. Use the opening in the underside of the tray (see dark arrow) to lift the glass shelf from underneath and remove it.
- Move the tray back to its original position resting on the adjustable shelf.

The tray can only be detached from the adjustable shelf once it has been returned to its original position and is resting on the adjustable shelf. The fastener must be sitting in the circular recess at the end of the runner guide ①.

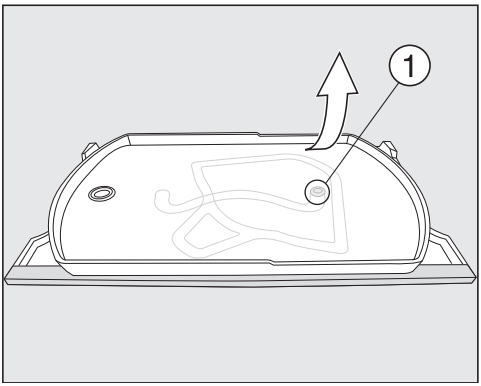

- Take a firm hold of the top right of the bottom part of the adjustable shelf and pull the tray firmly off the adjustable shelf.

The fastener on the tray comes loose from the circular recess at the end of the runner guide ①.

You can now dismantle all the parts and clean them.

Underneath the plastic shelf, there is a glass panel which is held in place with retainers ② on the outer edge of the adjustable shelf.

The glass panel can also be removed for cleaning as described below:

- Move the shelf so that the stainless steel strip is at the back and the front edge hangs over the worktop slightly.

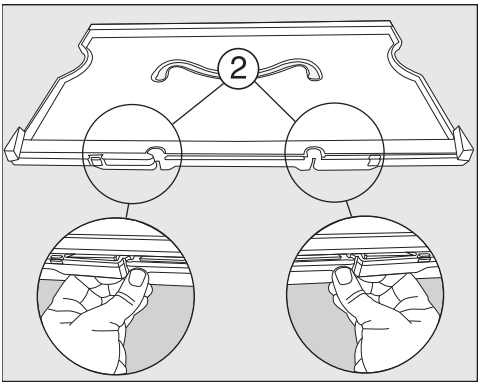

- Release the retainers ② and lift the plastic panel up.

The glass panel comes loose. Both parts can now be cleaned.

Assembling the adjustable shelf with pivotable glass shelf (FlexiTray)

- Put the plastic adjustable shelf down on the worktop so that the recess is at the top and the stainless steel strip is at the front.

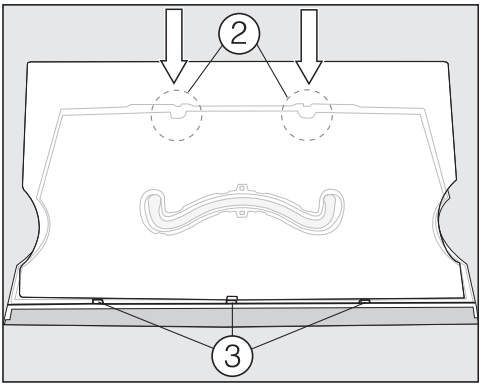

- Place the glass panel in the grooves ③ and then secure it in the retainers ②.
- Turn over the shelf so that the plastic surface is facing upwards.

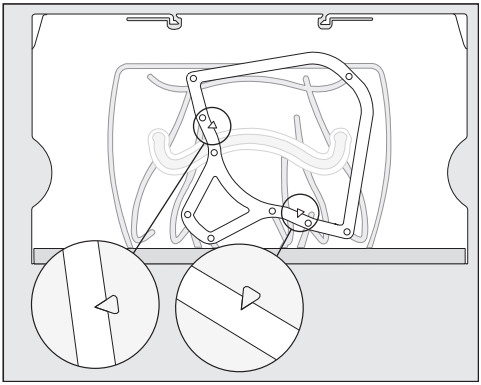

- Place the frame on the adjustable shelf so that the arrows on the adjustable shelf line up with the recesses on the frame.

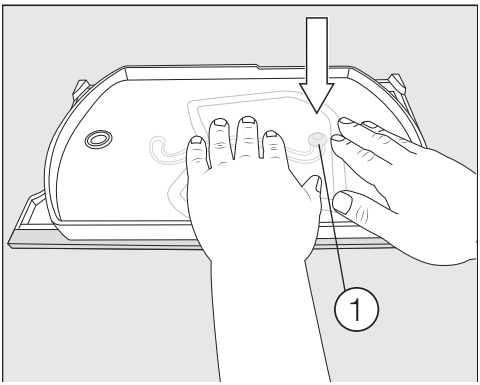

- Take hold of the tray with the fastener facing downwards and push the fastener firmly into the circular recess at the end of the runner guide ①.
- Place the glass shelf in the tray.

Removing and dismantling the storage drawer (CompactCase)

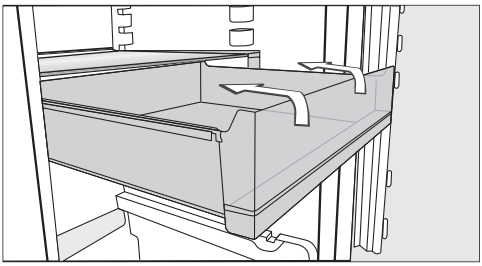

- Pull the drawer out as far as it will go. Tilt the drawer up slightly and remove the drawer.

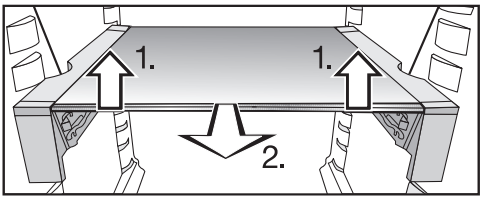

- Use both hands to raise the shelf and support slightly at the front (1.). Pull the shelf slightly forwards (2.) and remove it either upwards or out at an angle, making sure that the recesses on the left and right are in line with the shelf supports.
- Place the shelf and support on a worktop covered with a soft material (e.g. a tea towel).

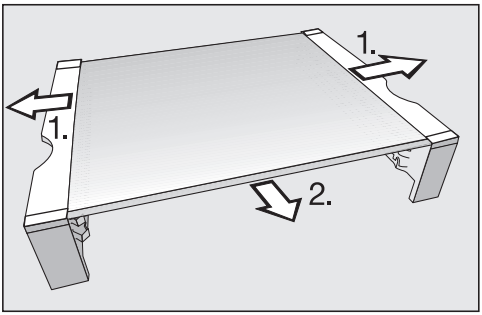

- Pull off the supports from the sides of the shelf (1.).
- Pull the stainless steel strip forwards off the shelf (2.).
- After cleaning the shelf, reattach the stainless steel strip, the protective strip and the supports.
- Insert the shelf together with the supports into the refrigeration appliance either from above or from the side.
- Push the shelf to the back as far as it will go.
- Insert the drawer from above into the upper or lower guide in the holder as required.

Removing the drawers from the refrigerator section

- Pull the drawer halfway out.

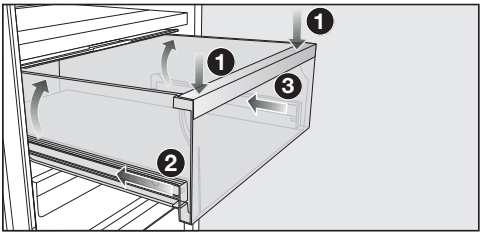

- Push the drawer down at the front ❶ until the drawer lifts up at the back. Keep the drawer pushed down.
- Now carefully push in the left ❷ and then the right ❸ telescopic runners approx. 2 cm.

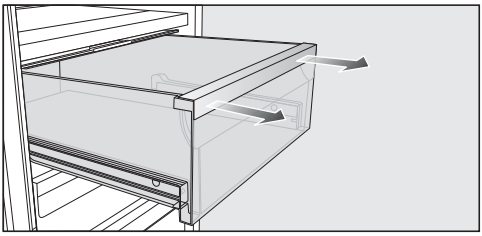

- Using both hands, pull the drawer firmly forwards.

Push in the telescopic runners fully to avoid damaging them.

Replacing the drawers

- Place the drawer on the fully retracted telescopic runners.
- Push the drawer into the refrigeration appliance until it clicks into position.

Removing the dividing plate

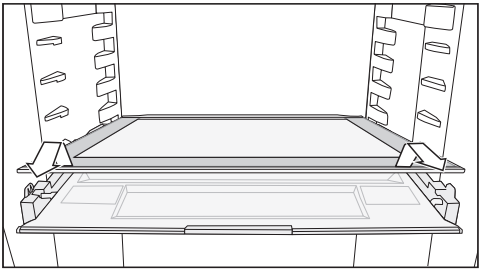

- Remove the dividing plate.
- After cleaning, slide the dividing plate back in again.

Removing the compartment cover

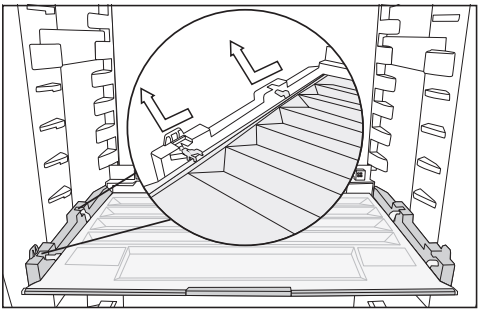

- Lift the cover at the front and pull it out.
- After cleaning, slide the compartment cover back in again.

Removing the drawers and glass shelves from the freezer section

Removing the drawer on telescopic runners

- Pull the drawer out as far as it will go.
- Holding the sides of the drawer at the back, lift it up and then forwards and out.

Push in the telescopic runners fully to avoid damaging them.

Replacing the drawer

- Place the drawer on the fully retracted telescopic runners.
- Push the drawer into the freezer section until it clicks into position.

Removing the bottom drawer

- Lift the drawer at the front and pull it out.

Removing a glass shelf

- Pull the glass shelf and telescopic runners out.

Removing the telescopic runners from the glass shelf

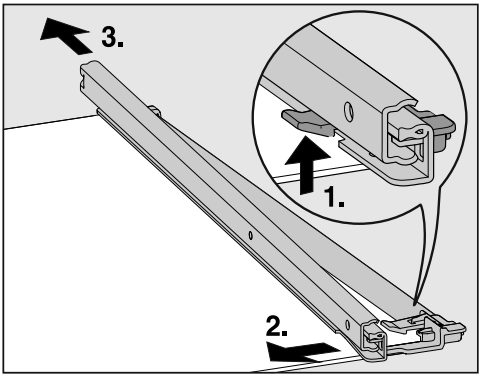

■ To remove the telescopic runners:

1. Push the catch upwards.
2. Push the telescopic runner to the side.
3. Then pull the telescopic runner off to the rear.

■ Pull off the protective strip at the front and back of the shelf.

■ After cleaning the shelf, reattach the protective strips.

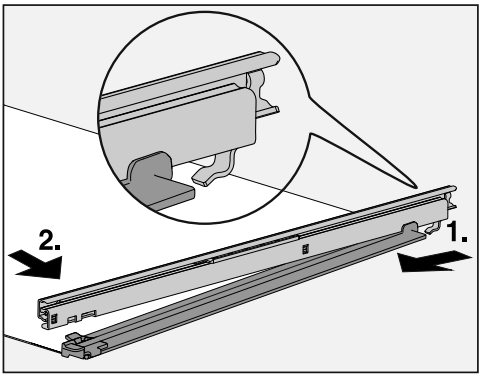

■ To attach the telescopic runners to the shelf:

1. Do so by hooking the telescopic runner on at the rear.
2. Then clip the catches into position at the front.

Replacing the charcoal filters (optional accessories)

Replace the charcoal filters in the holder every 6 months.

The ⊛ symbol in the start display reminds you that the charcoal filter needs to be changed.

Replacement KKF-RF charcoal filters can be obtained from Miele or the Miele online shop.

- Pull the charcoal filter holder upwards to remove it from the shelf.

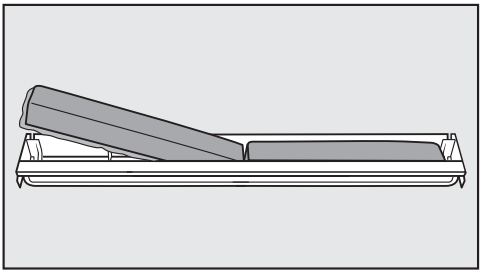

- Remove both charcoal filters and place the new filters with the surrounding edge pointing downwards in the holder.

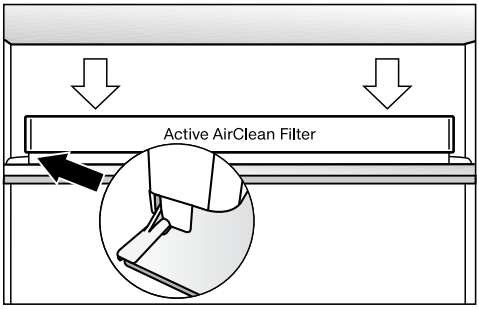

- Place the holder in the middle of the protective strip at the back of the adjustable shelf so that it clicks into position.
- Touch the ⊛ symbol on the display to confirm that the filters have been replaced.

The change charcoal filters indicator will go out and the counter is reset.

The ⊛ symbol will go out in the start display.

Cleaning the door seal

⚠ Risk of damage due to incorrect cleaning.
If you treat the door seal with oils or grease, it can become porous.
Do not use any oils or grease on the door seals.

- The door seal should be cleaned regularly with clean water, and then wiped dry with a soft cloth.

Cleaning the ventilation gaps

A build-up of dust will increase the energy consumption of the appliance.

- The ventilation gaps should be cleaned on a regular basis with a brush or vacuum cleaner (you could use a Miele Vacuum Cleaner dusting brush, for example).

After cleaning

- Refit all shelves and accessories in the appliance.
- Switch the refrigeration appliance back on, if necessary.
- If you have activated the refrigerator section's Cleaning mode: Tap on the start display.
- Tap again.

When Cleaning mode is switched off, the symbol will light up white.

The refrigerator section will start cooling again.

- Switch the SuperFreeze function on for a while so that the freezer can cool down quickly.
- Switch on the SuperCool function for a while so that the refrigerator section can cool down quickly.
- Place food in the refrigerator section and close the door.
- Once the freezer has reached the required temperature, place the frozen food back in the freezer drawers in the freezer.
- Switch the SuperFreeze function off as soon as the temperature in the freezer is a constant -18 °C or colder.
- Close the freezer door.

Many malfunctions and minor faults that can occur in daily operation can be corrected without contacting Miele. This will save you time and money because you will not need a service call.

You can find information on how to remedy faults yourself at www.miele.com.au/service or www.miele.co.nz/service and on the Miele website.

Please note, however, that a call-out charge will be applied to unnecessary service visits where the problem could have been rectified as described in these operating instructions.

To prevent cold from escaping, avoid opening the appliance door until the fault has been corrected.

Problem	Possible cause and remedy
The refrigeration appliance is not getting cold and the interior lighting does not come on when the appliance door is opened.	The refrigeration appliance is not switched on and the ⏻ symbol is lit up in the display. ■ Switch the appliance on.
	The plug is not properly inserted into the socket or the socket is not switched on. ■ Insert the plug into the socket correctly and switch on. If the refrigeration appliance is switched off, ⏻ will appear in the display.
	The mains circuit breaker has tripped. There could be a fault with the refrigeration appliance, the household electrical wiring or another electrical appliance. ■ Contact a qualified electrician or Miele.
The compressor runs continuously.	This is not a fault. To save energy, the compressor runs at a lower speed when less cooling is required. This increases the running time of the compressor.
The compressor is switching on more frequently and for longer periods of time. The temperature in the appliance is too low.	The ventilation gaps are covered or have become too dusty. ■ Do not block the ventilation gaps. ■ Clean the dust from the ventilation gaps on a regular basis.
	The appliance doors have been opened too frequently or a large amount of fresh food has been put in all at once for storage or freezing. ■ Only open the doors when necessary and for as short a time as possible.

Problem solving guide

Problem	Possible cause and remedy
	After a while, the temperature will return to normal by itself.
	The appliance doors are not closed properly. A thick layer of ice may have formed in the freezer section. ■ Close the appliance doors. After a while, the temperature will return to normal by itself. If a thick layer of ice has already formed, this will affect cooling and increase energy consumption. ■ Defrost the refrigeration appliance and clean it.
	The ambient temperature is too high. The higher the ambient temperature, the longer the compressor runs. ■ See the information in "Installation - Installation location".
	The appliance was not properly installed in the niche. ■ Install the refrigeration appliance in the niche as described in "Installation".
	The temperature setting is too low. ■ Correct the temperature setting.
	A large amount of food has been placed in the freezer at once. ■ See "Freezing and storing food".
	The SuperCool function ❄ is still switched on. ■ Switch off the SuperCool function ❄ earlier to save energy.
	The SuperFreeze function ❄ is still switched on. ■ Switch off the SuperFreeze function ❄ earlier to save energy.

Problem	Possible cause and remedy
The compressor comes on less and less often and for shorter periods of time. The temperature in the appliance rises.	This is not a fault. The temperature setting is too high. ■ Correct the temperature setting. ■ Check the temperature again after 24 hours.
	The frozen food begins to defrost. The ambient temperature is too low for this refrigeration appliance. If the ambient temperature is too low, the compressor will run less frequently. This may cause the freezer to become too warm. ■ See the information in "Installation - Installation location". ■ Increase the ambient temperature.
Ice or condensation has built up inside the refrigeration appliance. The appliance door may not close correctly.	The door seal has come out of its groove. ■ Check that the door seal is correctly seated in the groove.
	The door seal is damaged. ■ Check if the door seal is damaged.
The door seal is damaged and needs to be replaced.	No tools are required to change the door seal. ■ Change the door seal. A replacement is available from Miele.

Problem solving guide

Other problems

Problem	Possible cause and remedy
The floor of the refrigerator is wet.	The condensate drain hole is blocked. ■ Clean the condensate channel and drain hole.
Food has frozen together.	The food packaging was not dry when loaded in the freezer. ■ Use a blunt instrument, e.g. a spoon handle or plastic scraper, to prise it apart carefully.
There is no audible alarm even though the appliance door has been open for a long time.	This is not a fault. The alarm has been switched off in Settings mode. If you want to switch the audible alarm back on again: ■ Tap ⚙. ■ Swipe left or right until 🔕 is shown in the middle. ■ Tap 🔕. ■ Select the volume you want by swiping the segment bar to the right. ■ Confirm the setting you want by tapping the segment bar. When the alarms and buzzers are switched on, 🔊 orange will appear.

Messages in the display

Message	Possible cause and remedy
lights up in the start display, the refrigeration appliance does not get cold even though the controls and the interior lighting are working.	Demo mode has been activated. ■ Tap ⏻. ■ Tap ⚙. ■ Swipe left or right until is shown in the middle. ■ Tap . After Demo mode has been switched off, the refrigeration appliance shuts down and must be switched on again.
is lit up in the display and the refrigeration appliance cannot be used.	The Cleaning mode function is still switched on. ■ Switch the Cleaning mode function off again by tapping on in the start display. ■ Tap again. When Cleaning mode is switched off, the symbol will light up white. The refrigeration appliance will start cooling again.

Message	Possible cause and remedy
Nothing is visible in the display. The display is dark.	Sabbath mode is switched on: the interior lighting is switched off and the refrigeration appliance is cooling down. ■ Tap on the black display. will appear in the display. ■ Tap . lights up orange. ■ Tap the icon again. When Sabbath mode is switched off, the symbol will light up white.
is lit up in the display and the refrigeration appliance cannot be used.	The lock function has been activated. ■ Unlock the refrigeration appliance temporarily or switch the lock function off completely (see "Selecting further settings – Deactivating the lock function / temporarily/switching off completely").
The symbol lights up in the start display and a buzzer also sounds.	The charcoal filter change indicator in the start display reminds you that the charcoal filter needs to be changed. ■ Replace the charcoal filter in the holder (see "Cleaning and care – Replacing the charcoal filters (optional accessories)") and touch the symbol on the display to confirm that you have changed the charcoal filter. The symbol will go out in the start display.
lights up yellow in the temperature display for the refrigerator section and/or the freezer section and an alarm also sounds.	The door alarm has been activated. ■ Touch and hold in the display for a few seconds. The alarm will stop and the symbol will go out. ■ Close the relevant appliance door.

Problem solving guide

Message	Possible cause and remedy
lights up red in the freezer section temperature display and an alarm also sounds.	The temperature alarm has been activated; the temperature in the freezer section has risen higher or fallen lower than the temperature set. Possible reasons for this include: – The appliance door has been opened too frequently. – A large quantity of fresh food has been placed in the freezer without switching on the SuperFreeze function. – A prolonged power cut (mains outage) has occurred. – The appliance has a fault. ■ Tap . The alarm message is confirmed: goes out and the alarm stops. The warmest temperature recorded in the freezer section will flash for about 1 minute in the display. Then the temperature display will change to the current temperature in the freezer section. You can exit the flashing temperature display early: ■ Touch the temperature display for the freezer section. The warmest temperature displayed will disappear. The display will revert to showing the current temperature in the freezer. ■ Rectify the cause of the alarm. ■ Depending on the temperature displayed, you should check whether food in the freezer has started to thaw or has defrosted. Defrosted food may only be refrozen after it has been cooked.

Message	Possible cause and remedy
⚠ lights up red in the display and an alarm also sounds.	Indication of an interruption to the power supply: the temperature in the freezer section over the last few days or hours has risen too high because of a power cut or interruption to the power supply. ■ Tap ⚠. The fault message is confirmed: ⚠ goes out and the alarm will stop. The warmest temperature recorded in the freezer section will flash for about 1 minute in the temperature display for the freezer section. Then the temperature display will change to the current temperature in the freezer section. You can exit the flashing temperature display early: ■ Touch the temperature display for the freezer section. The warmest temperature display will disappear. The display will revert to showing the current temperature in the freezer. The appliance will operate at the last temperature setting when the power is restored. ■ Rectify the cause of the alarm. ■ Depending on the temperature displayed, you should check whether food in the freezer has started to thaw or has defrosted. Defrosted food may only be refrozen after it has been cooked.

Problem solving guide

Message	Possible cause and remedy
⚠ lights up red in the display and a fault code F with numbers may appear. An alarm tone also sounds.	There is a fault. ■ Tap 🔕 on the display to switch the alarm off. ■ Call Miele. To report the fault, you need the fault code and also the model identifier and serial number of your refrigeration appliance. You can access this information in the display. ■ To do this touch **i** in the display. The appliance data required will be shown in the display. Confirm with *OK* to exit the information display and the fault code will be shown again in the display. The appliance can be switched off directly from the fault code display.
	There is an appliance fault: this display always has priority over any settings which have just been selected. An appliance fault has priority over any current door and/or temperature alarms in the display.

Interior lighting

Problem	Possible cause and remedy

⚠ Risk of electric shock due to exposed, live electrical components!

When removing the lighting cover, there is a risk of coming into contact with live electrical components.

Do not remove the lighting cover. The LED lighting must only be repaired or replaced by a qualified technician.

⚠ Danger of injury from LED lighting.

This lighting corresponds to risk group RG 2. If the cover is defective, there is a risk of eye injury.

Do not look from a close range directly into the lighting with optical instruments (e.g. magnifying glass or similar).

Problem	Possible cause and remedy
The interior lighting is not working.	The refrigeration appliance is not switched on. ■ Switch the appliance on.
	Sabbath mode is switched on: the display is black and the refrigeration appliance is cooling. ■ Tap on the black display. will appear in the display. ■ Tap . lights up orange. ■ Tap on the symbol in Settings mode . When Sabbath mode is switched off, the symbol will light up white.
	To avoid overheating, the interior lighting switches itself off automatically after approx. 15 minutes if the door is left open. If this is not the case, there is a fault. ■ Call Miele.

Problem solving guide

Problem	Possible cause and remedy
The LED lighting on one of the adjustable shelves is not working.	The shelf has not been positioned correctly on the shelf supports. ■ Check that the shelf is positioned correctly on the shelf supports. The shelf has metal contacts at the front left corner which supply power to the LED lighting. ■ Push the shelf in until it clicks into position.
	The LED lighting on the stainless steel strip is faulty. ■ Replace the stainless steel strip with LED lighting. A replacement is available from Miele.
The LED lighting is not working on any of the shelves.	Liquid has been spilt onto the LED lighting on one of the shelves or into the contact openings on the left-hand shelf supports. The safety switch-off mechanism has switched off the LED lighting on all shelves. ■ Wipe the stainless steel strip with LED lighting with a damp cloth and dry it or leave it outside the refrigeration appliance to dry. ■ Make sure that the contacts are clean and dry before replacing the shelves with LED lighting. ■ Push the shelf in until it clicks into position. ■ Close the appliance door. The interior lighting will come on when the door is opened again.
	If this is not the case, then there is a fault. ■ Call Miele.

The refrigeration appliance is producing various noises during operation.
If the cooling demand is low, the refrigeration appliance will conserve energy but operate for longer. The volume will be lower.
Food will be chilled faster if the cooling demand is high.
The volume will be higher.

Normal noises	What causes them
Brrrrr ...	A humming noise is made by the compressor. This noise can get louder for brief periods when the compressor switches on.
Blubb, blubb ...	A gurgling noise can be heard when coolant is circulating through the pipes.
Click ...	Clicking sounds occur whenever the thermostat switches the compressor on or off.
Sssrrrrr ...	You can sometimes just hear the sound of the fan inside the appliance.
Crack ...	A cracking sound can be heard when materials expand inside the appliance.
Please bear in mind that the noise of the compressor and the coolant circulating in the system is unavoidable.	

Noises	Possible cause and remedy
Rattling, vibrating, clinking	The refrigeration appliance is uneven. Realign the appliance using a spirit level. Do so by raising or lowering the adjustable feet underneath the refrigeration appliance. For niches of 140 cm and more: place the stabilising rods supplied underneath the appliance base.
	Drawers, baskets or shelves are jiggling or are stuck. Check all removable items and refit them correctly.
	Bottles or containers are touching. Separate them.

You can find information on how to remedy faults yourself and about Miele spare parts at www.miele.com.au/service or www.miele.co.nz/service.

Contact in case of fault

In the event of a fault which you cannot remedy yourself, please contact Miele.

You can book a Miele customer service call-out online at www.miele.com.au/service or www.miele.co.nz/service.

Contact information for Miele can be found at the end of this booklet.

Please quote the model and serial number of your appliance when contacting Miele. Both of these can be found on the data plate inside the refrigeration appliance or, depending on the model, in the settings mode under information **i**.

Warranty

The manufacturer's warranty for this appliance is 2 years.

For more information about country-specific warranty terms and conditions, please contact Miele.

Miele Australia Pty. Ltd.
ACN 005 635 398, ABN 96 005 635 398
Miele Head Office Melbourne:
Level 4, 141 Camberwell Road
Hawthorn East, VIC 3123
1300 464 353 (1300 4 MIELE)
info@miele.com.au
www.miele.com.au

Hong Kong, China
Miele (Hong Kong) Ltd.
41/F - 4101, Manhattan Place
23 Wang Tai Road, Kowloon Bay
Hong Kong
Tel.: (852) 2610 1025
Fax: (852) 3579 1404
E-mail: customerservices@miele.com.hk
Website: www.miele.hk

India
Miele India Pvt. Ltd.
1st Floor, Copia Corporate Suites,
Commercial Plot 9,
Mathura Road, Jasola,
New Delhi - 110025
E-mail: customercare@miele.in
Website: www.miele.in

Malaysia
Miele Sdn Bhd
Suite 12-2, Level 12
Menara Sapura Kencana Petroleum
Solaris Dutamas No. 1, Jalan Dutamas 1
50480 Kuala Lumpur, Malaysia
Phone: +603-6209-0288
Fax: +603-6205-3768

Miele New Zealand Ltd.
IRD 98 463 631
Head Office:
8 College Hill
Freemans Bay, Auckland 1011
0800 464 353 (0800 4 MIELE)
customercare@miele.co.nz
www.miele.co.nz

Singapore
Miele Pte. Ltd.
29 Media Circle
#11-04 ALICE@Mediapolis
Singapore 138565
Tel: +65 6735 1191
Fax: +65 6735 1161
E-mail: info@miele.com.sg
Internet: www.miele.sg

South Africa
Miele (Pty) Ltd
63 Peter Place, Bryanston 2194
P.O. Box 69434, Bryanston 2021
Tel.: (011) 875 9000
Fax: (011) 875 9035
E-mail: info@miele.co.za
Internet: www.miele.co.za

Thailand
Miele Appliances Ltd.
BHIRAJ TOWER at EmQuartier
43rd Floor Unit 4301-4303
689 Sukhumvit Road
North Klongton Sub-District
Vadhana District
Bangkok 10110, Thailand

Miele Global Headquarters Germany
Miele & Cie. KG, Carl-Miele-Straße 29, 33332 Gütersloh, Federal Republic of Germany

Miele

KFNS 7784 D

en-AU, NZ

M.-Nr. 11 753 401 / 00