Whynter BWR-408SB 24 inch Built-In 46 Bottle Undercounter Stainless Steel Wine Refrigerator with Reversible Door, Digital Control, Lock and Carbon Filter

Model # : BWR-408SB

INSTRUCTION MANUAL



Congratulations on your new Whynter product. To ensure proper operation, please read this Instruction Manual carefully before using this product. Keep this manual in a safe place for future reference.

Table of Contents

	PAGE
Safety Precautions	**3 - 4**
Parts	**5**
Product Features	**6**
Installation	**7 - 9**
Operation and Controls	**10 - 11**
Storage	**12 - 13**
Care and Maintenance	**14**
Troubleshooting	**15 - 16**
Warranty Information	**17**

APPLIANCE SAFETY

Your safety and the safety of others are very important to us.

To reduce the risk of fire, electrical shock, or injury when using your appliance, follow these basic precautions:



This is the Safety Alert Symbol. This symbol alerts you to potential hazards that may serious injury. All safety messages will follow the Safety Alert Symbol and either the word "DANGER" or "WARNING"



Danger means that failure to heed this safety statement may result in severe injury or death.



Warning means that failure to heed this safety statement may result in extensive product damage, serious injury, or death.



Caution means that failure to heed this safety statement may result in minor or moderate injury, or property or equipment damage.

All safety messages will alert you to know what the potential hazard is, tell you how to reduce the chance of injury, and let you know what can happen if the instructions are not followed.

IMPORTANT SAFETY GUIDELINE



Before the appliance is used, it must be properly positioned and installed as described in this manual, please read the manual carefully. To reduce the risk of fire, electrical shock or injury when using the appliance, follow basic precaution, including the following:



- Plug into a grounded 3-prong outlet, do not remove grounding prong, do not use an adapter, and do not use an extension cord.
- Do not use if the power supply cord is damaged. If damaged, it must be replaced by a qualified electrician.
- It is recommended that a separate circuit, serving only your appliance be provided. Use receptacles that cannot be turned off by a switch or pull chain.
- Never clean appliance parts with flammable fluids or harsh chemicals. These fumes can create a fire hazard or explosion.
- Do not store flammable materials or liquids near the appliance.
- Before proceeding with cleaning and maintenance operations, make sure to unplug the appliance.
- Do not connect or disconnect the electric plug with wet hands.

Safety Precautions

- Do not attempt to repair or replace any part of your appliance unless it is specifically recommended in this manual. All other servicing should be referred to a qualified technician.
- This appliance is CFC- and HFC-free and contains small quantities of Isobutane (R600a) which is environmentally friendly, but flammable. It does not damage the ozone layer, nor does it increase the greenhouse effect. Care must be taken during transportation and setting up of the appliance that no parts of the cooling system are damaged. Leaking coolant can ignite and may damage the eyes.

  In the event of leakage:

  - Avoid open flames and anything which creates a spark
  - Disconnect from the mains
  - Air the room in which the appliance is located for several minutes and contact the Service Department for advice



FOLLOW WARNING CALL OUTS BELOW ONLY WHEN APPLICABLE TO YOUR MODEL

- Use two or more people to move and install the appliance. Failure to do so can result in injury.
- To ensure proper ventilation for your appliance, the front of the appliance must be completely unobstructed.
- Choose a well-ventilated area with temperatures above 60°F (16°C) and below 90°F (32°C).
- This appliance must be installed in an area protected from the elements, such as wind, rain, water spray or drips.
- The appliance should not be located next to ovens, grills or other sources of high heat.
- The appliance must be installed with all electrical connections in accordance with state and local codes.
- The fuse (or circuit breaker) size should be 15 amperes.
- It is important for the appliance to be leveled in order to work properly. For a stable installation, make sure the appliance is placed on a flat, level and solid surface.
- Ensure that the surface on which the appliance is placed is strong enough to hold the appliance and the items stored inside.
- Do not use solvent-based cleaning agents of abrasives on the interior. These cleaners may damage or discolor the interior.
- Keep fingers out of the “pinch point” areas. Clearance between the door and cabinet are relatively small. Be careful closing the door when children are in the area.
- This wine refrigerator is designed to store wine bottles. If food is stored inside, ensure that there is sufficient airflow between items. Please note that the temperature range for this wine refrigerator is optimized for wine storage. Perishable food items may require a different storage environment and is not recommended.
- Do not place hot food or beverages into the appliance.
- Close the wine refrigerator door immediately after placing items inside to keep the internal temperature relatively constant.
- Avoid placing any objects on top of the appliance.
- This is an electrical appliance, to avoid injury from electrical shock do not operate the unit with wet hands, while standing on a wet surface or while standing in water. Do not use outdoors or in wet conditions.
- When positioning or moving the appliance, ensure that it is not turned upside down or unleveled greater than 45°. If the appliance does not remain in an upright position, allow it to sit upright for a minimum of 4 hours to allow the refrigerant to settle.
- Never pull the power cord to disconnect it from the outlet. Grasp the plug and pull it from the outlet.
- Never lift, carry or drag the appliance by the power cord.
- This appliance is designed for household, non-commercial use only. Any other use will void the warranty.
- Do not plug into the power outlet before set up is completed.
- Do not move this appliance without emptying it and securing the door in a closed position.

Parts

BWR-408SB



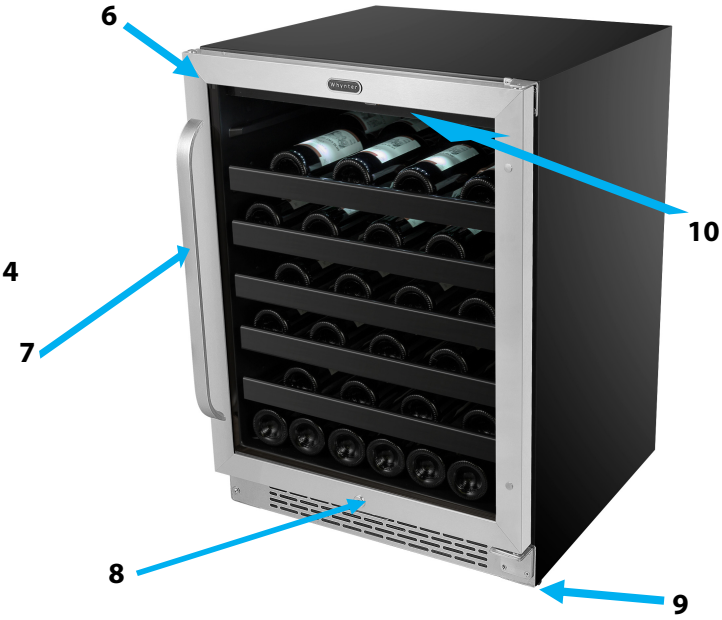

11



Keys



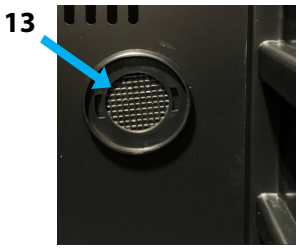

1. Control Panel Temperature Control /Light	6. Stainless Steel Door	11. Keys
2. Top Hinge	7. Handle	12. Drip Tray (Rear)
3. Shelves (5)	8. Cylinder lock	13. Activated Carbon Filter (inside cabinet)
4. Door Gasket	9. Four Adjustable Legs	
5. Front Vent	10. Interior Light	

Product Features

Our Whynter Built-In Under-Counter Stainless Steel Wine Refrigerator offers premium quality and innovative design ideal for your wine collecting needs. Whether for the enthusiast or the connoisseur, this single zone compressor wine refrigerator provides premium and advanced wine storage functionality. The Whynter BWR-408SB can hold up to 46 standard 750ml wine bottles.

The powerful compressor cooling process offers optimum temperatures (low 40ºF to mid 60ºF) for red, white, and sparkling wines. The front ventilation design of this unit allows for flush with cabinet installation or simply freestanding usage. The premium appeal of this wine refrigerator features a substantial stainless steel trimmed door accented with a luxurious curved handlebar.

Designed with intuitive use in mind, this refrigerator comes equipped with a sleek touch screen control that lets you set the temperature to anywhere from 40ºF – 65ºF / 5ºC – 18ºC.

FEATURES

- Capacity: 46 bottles standard 750ml wine bottle
- Built-in or Freestanding installation
- Stainless steel glass door with sleek black cabinet
- Touch screen control with temperature range from 40°F – 65°F
- Environmentally friendly refrigerant
- Activated carbon filter eliminates odors
- Luxurious curved handlebar
- Tempered double-pane glass
- Soft interior LED lighting with on/off switch
- Internal fan-forced circulation for even temperature distribution throughout the cabinet
- Reversible door swing
- Fahrenheit and Celsius degree optional temperature indicators
- 5 removable pull-out sliding shelves
- Cylinder lock and two keys

TECHNICAL DATA

Model:	BWR-408SB
Capacity :	46 standard 750ml wine bottles
Voltage:	115V /60Hz
Power Consumption:	85W / 0.9A
Temperature Range:	40°F - 65°F
Net Weight:	121lbs
Gross Weight:	139 lbs
Unit Dimension:	23.4" W x 22.4" D x 32.3" H
Packaging Dimension:	27.2" W x 26.5" D x 38.6" H
Refrigerant:	R600a

IMPORTANT SAFETY INSTRUCTIONS

 WARNING	To reduce the risk of fire, electrical shock, or injury when using your appliance, follow these basic precautions:

- Read all instructions before using the appliance.
    - **DANGER or WARNING:** An empty wine refrigerator can be a hazardous for children or small pets. If disposing of the wine refrigerator, remove gasket seals, latches, lids or the entire door from your unused appliance, or take other action to ensure the wine refrigerator is harmless.
- Never allow children to operate, play with, or crawl inside the appliance.
- Never clean appliance parts with flammable fluids or harsh chemicals. The fumes can create a fire hazard or explosion.
- Do not store or use gasoline or any other flammable vapors and liquids in the vicinity of this or any other appliance. The fumes can create a fire hazard or explosion.

INSTALLATION INSTRUCTIONS

BEFORE USING YOUR APPLIANCE

- Remove the exterior and interior packing.
- Before connecting the appliance to the power source, let it stand upright for approximately 4 hours. This will reduce the possibility of a malfunction in the cooling system from handling during transportation.
- Clean the interior surface with lukewarm water using a soft cloth.
- Install the handle on the door.

INSTALLATION OF YOUR APPLIANCE

- The appliance is designed for built-in, recessed or free standing installation.
- **WARNING**: Do not store or install the appliance outdoors.
- **CAUTION**: This wine refrigerator is designed for storing and cooling beverages. Do not store perishable food, medicine or other medical products.
- Place your appliance on a hard and level floor that is strong enough to support it when it is fully loaded.
- We do not recommend installing the appliance on carpet.
- To level your appliance, adjust the leveling legs at the bottom of the appliance if needed.
- For free standing installation, 5 inches (127mm) of space between the back and sides of the appliance is suggested, which allows the proper air circulation to cool the compressor and condenser. Even for built-in installation, a ¼" (6.35mm) space is required on each side and at the top. The front air vent must never be covered or blocked in any way.
- NOTE: DO NOT install the appliance near an oven or other heating source. Direct sunlight may affect the acrylic coating and heat sources may increase electrical consumption. For best performance, do not install the appliance behind a cabinet door or block the base grille.
- Avoid locating the appliance in area that may be exposed to excessive moisture.
- Plug in the appliance into an exclusive, grounded wall power outlet. Do not under any circumstances cut or remove the third (ground) prong from the power cord. Any questions concerning power and/or grounding should be directed toward a qualified electrician or contact Whynter Customer Support.

Installation

BUILT-IN CABINET INSTRUCTIONS

These appliances are designed for both built-in or free standing installation. For built-in installation, ensure proper service access and ventilation, allow at least ¼" space on each side and at the top.

CABINET OPENING DIMENSIONS (minimum)	
	BWR-408SB
Width	24"
Depth	23"
Height	33"

ELECTRICAL CONNECTION

WARNING: Improper use of the grounded plug can result in the risk of electrical shock. If the power cord is damaged, have it replaced by a qualified electrician or contact Whynter Service Department

This appliance requires a standard 115/120 Volt AC ~/60Hz electrical ground outlet with three-prong. Have the wall outlet and circuit checked by a qualified electrician to make sure the outlet is properly grounded. The cord should be secured behind the appliance and not left exposed or dangling to prevent accidental injury.

The appliance should always be plugged into its own individual electrical outlet which has a voltage rating that matches the rating label on the appliance. This provides the best performance and also prevents over-loading the house wiring circuit that could cause a fire hazard from overheating. Never unplug the appliance by pulling the power cord. Always grip the plug firmly and pull straight out from the receptacle. Repair or replace the power cord immediately if it becomes frayed or otherwise damaged. Do not use a cord that shows cracks or abrasion damage along its length or at either end. When moving the appliance, be careful not to damage the power cord.

EXTENSION CORD

Because of potential safety hazards, it is strongly recommended that you do not use an extension cord with this appliance. However, if you must use an extension cord, it is absolutely necessary that it be a UL/CUL-Listed, 3-wire grounding type appliance extension cord having a grounding type plug and outlet and that the electrical rating of the cord be 115 volts and at least 10 amperes.

INSTALLING STAINLESS STEEL HANDLE

This appliance includes stainless steel handle that are not required to operate this appliance. To install the handle please follow the below instructions:

1. The gaskets are easily displaced by hand, no tools are necessary.
2. Use a flat-head screwdriver to remove the two pre-installed decorative plugs from the back of doors. Some beverage refrigerators have no decorative plugs.
3. Install the handle tightly as shown with two screws, lock washers and flat washers provided. (DO NOT over tighten as this will cause damage to the handle and stainless steel door frame).
4. Replace the door gaskets to its original position.

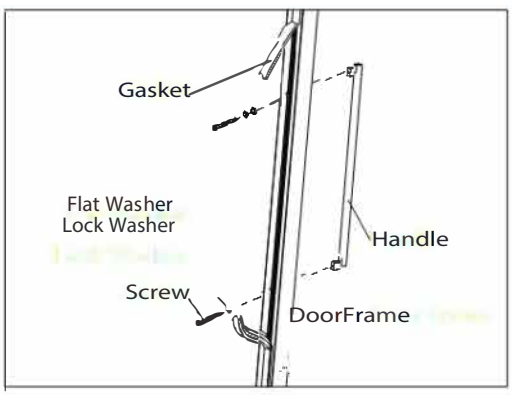

Installation

REVERSING THE DOOR SWING OF YOUR BEVERAGE WINE REFRIGERATOR

Note: *All parts removed must be saved for proper reinstallation of the door.*

This appliance has the capability of the door opening from either the left or right side. The appliance is delivered to you with the door opening from the left side. Should you desire to reverse the opening direction, please follow the following reversal instructions.

1. Remove the front ventilation grille (2) and the adjustable ventilation grille (1) by unscrewing the screws (3) & (4). (Figure 1)
2. Remove the bottom hinge plate (5) by unscrewing the four lock screws (6). Be careful to hold the glass door firmly after removing the screws. (Figure 2)
3. Gently pull down to remove the glass door from the right top hinge and place it on a padded surface to avoid the risk of damage, then remove the right top hinge (7). (Figures 3 & 4)
4. Unscrew and transfer the hinge pin of the bottom hinge plate (5) to the opposite side.
5. Pop out the cover caps on the upper left side corner of the inside cabinet and use them to cover the screw holes on the right hand side.
6. Screw the alternative left top hinge (9), included in the fittings, on the left hand side of cabinet. (Figure 4)
7. Relocate the door to the designated position. Then screw the bottom hinge assembly on the left designated position and tighten it after the door is leveled. (Figure 2)
8. Reassemble the ventilation grilles.

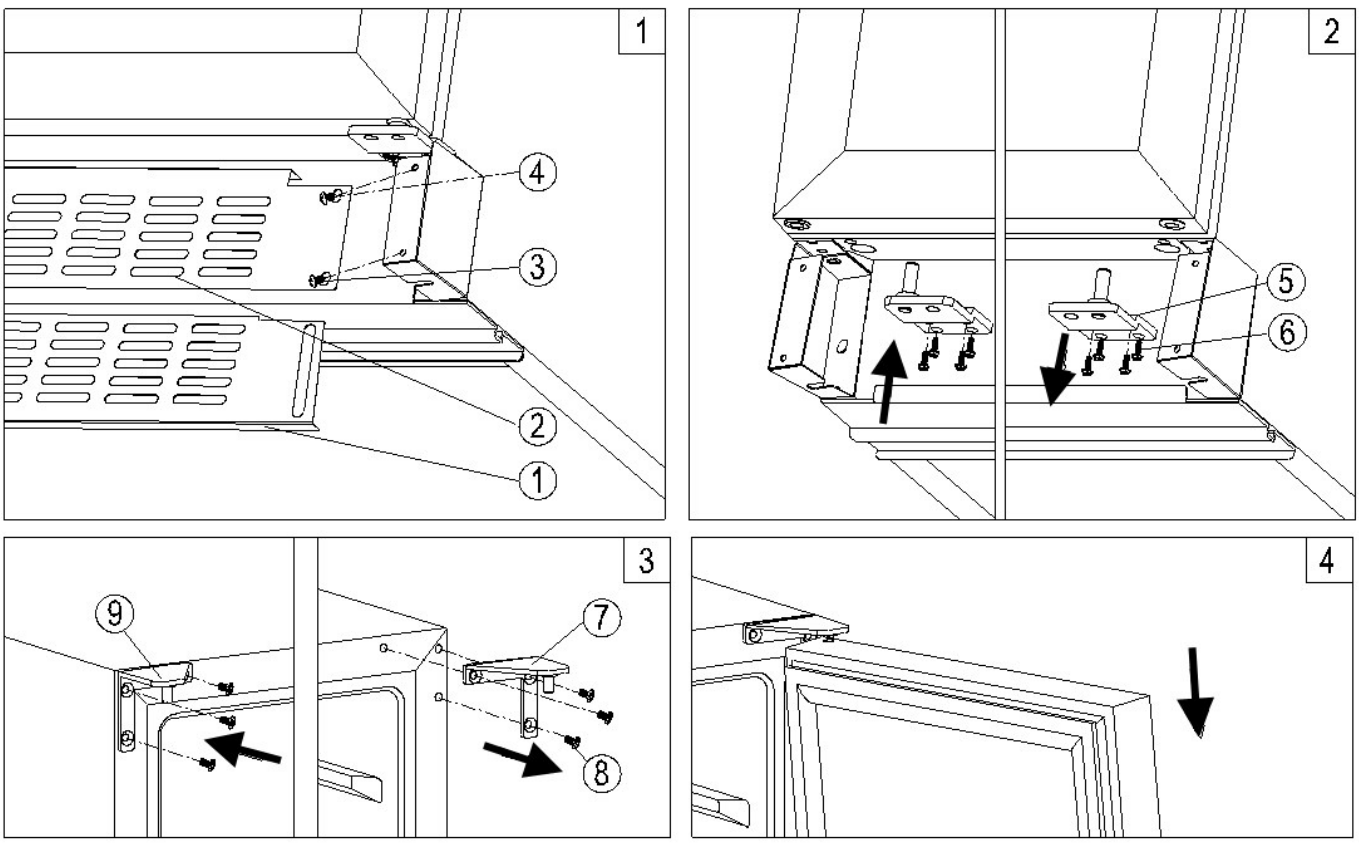

Operation and Controls

It is recommended you install the appliance in a place where the ambient temperature is between 72°- 78°F / 23°-26°C. If the ambient temperature is above or below recommended temperatures, the performance of the beverage wine refrigerator may be affected. For example, placing your appliance in extreme cold or hot conditions may cause interior temperatures to fluctuate.

NOTE:
When using the beverage wine refrigerator for the first time or restarting after being shut off for a long period of time, there may be a few degree variance between the set temperature and the LED readout. This is normal due the length of activation time. The unit should return to normal after running for a few hours. This unit will not raise its internal temperature if the ambient temperature where the unit is located is lower than the set temperature.

RECOMMENDED TEMPERATURE SETTINGS

Conservation	49 - 57°F	10 - 14°C
Red Wines	58 - 72°F	15 - 22°C
Dry/White Wines	48 - 57°F	9 - 14°C
Rose Wines	49 - 51°F	10 - 11°C
Sparkling Wines	40 - 47°F	5 - 8°C

CONTROL PANEL GUIDE



- **POWER**

  To turn the appliance on/off, press and hold the power key for 5 seconds.

- **UP**

  To increase (warm) the set temperature by 1°C or 1°F.

- **DOWN**

  To decrease (cool) the set temperature by 1°C or 1°F.

- **LIGHT**

  To turn the internal light on/off.

°F/°C SELECTOR

Select the temperature display setting in Fahrenheit or Celsius degree. To change the temperature from Fahrenheit to Celsius or from Celsius to Fahrenheit, press and hold the LIGHT key for 5 seconds.

NOTE: If the appliance is unplugged, encounter power interruption, or turned off, you must wait 3 -5 minutes before restarting the appliance. If attempted to restart before this time delay, the appliance may not start.

SETTING THE TEMPERATURE CONTROL

- During normal operation, the temperature display on the control panel shows the temperature inside the appliance.
- When the unit is plugged in for the first time, the unit will power up automatically to the preset defaults. The preset temperature is 54°F (12°C).
- The temperature that you desire to set will increase 1°C or 1°F if you press the UP key once and will decrease 1°C or 1°F if you press the DOWN key once. The display flashes while you make the setting.
- To view the set temperature at any time, press the UP or DOWN key, the set temperature will temporarily flash in the display for 5 seconds. Then the display shows the current internal temperature again.

Operation and Controls

TEMPERATURE MEMORY FUNCTION

In the event of a power interruption (power surge, breaker switch, etc.), the unit can remember the previous temperature settings. When the power has restored, the temperature display will show the current cabinet temperature.

INTERIOR LIGHT

The interior light makes it easy to view your beverage labels and enhances the display of your collection. The light can be turned on or off pressing the light button on the display.

CABINET SHELVES

NOTE: *Do not cover any part of the shelves with aluminum foil or any other material that will prevent adequate air circulation within the cabinet.*

This appliance is equipped with removable shelves. To prevent damage to the door gasket, make sure the door is opened completely before pulling the shelves out.

ACTIVATED CARBON FILTER

The Whynter @WR-408SB is equipped with one activated carbon filter, which ensures optimum air quality within the wine cabinet. This filter counters and prevents any contaminants and odors from the ambient air affecting the taste of the wine stored.

Replace the active carbon filter once a year. If you are interested in purchasing an additional carbon filter, please contact support@whynter.com for retail sales information.

To change the filter,

- Turn the filter cover 90° clockwise or counterclockwise and then remove the filter.
- Insert the new filter in the vertical position.
- Turn the filter cover 90° clockwise or counterclockwise until it click into position.

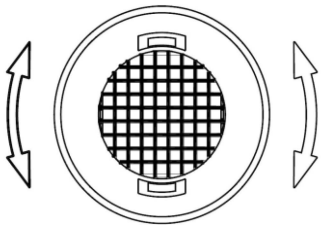

NORMAL SOUNDS

The unit is cooled by a compressor. The compressor pumps coolant through the cooling system, producing operating noise. Even when the compressor cuts out, noises caused by changes in temperature and pressure are unavoidable. Operating noise will be most audible immediately after the compressor comes on. It becomes quieter as the operating period continues.

The following noises are normal and occur from time to time:

- Gurgling sound, caused by the refrigerant flowing through the appliance's coils,
- Humming noise made by the compressor. This noise can get louder for brief periods when the motor is switching on.
- Cracking/popping sounds, resulting from the materials contraction and expansion due to temperature variations,
- Fan operating sound, to circulate the air within the beverage cabinet.
- Unusual noise is normally the result of improper installation.
- Where the unit is installed in open-plan kitchen or in partition walls, the level of operating noise will be heard more acutely. However, this is due to the surrounding architecture and not to the unit.

  NOTE: An individual's perception of noise is directly linked to the environment in which the unit is located, as well the specific type of models. Our appliances are in line with international standards for such appliance and in line with the latest technical developments. Please remember that the noise of the compressor and the coolant circulating in the system is unavoidable.

DEFROSTING AND VENTILATION

Your beverage wine refrigerator is designed with an automatic defrost system. During off-cycle, the evaporator behind the rear wall of the unit defrosts automatically. Condensation is collected in the drain at the back of the unit and flows through the drainage hole into the drip tray above the compressor. The heat is transferred from compressor and evaporates any condensation that has collected in the drip tray. Part of the remaining water within the beverage re-frigerator is collected for humidity purposes.

NOTE: *Frostmay accumulate on the evaporator if the unit is repeatedly opened in a high heat or high humidity location. If this frost pattern does not clear within 24 hours, your unit will require manual defrosting.*

Storage

Wine bottles may differ in size and dimensions so the actual number of bottles can be stored may vary.
The 46 bottles capacity is the approximate maximum when storing traditional 750ml and includes bulk storage. You may load your wine bottles in single row or by stacking while taking note of the following: if you do not have enough bottles to fill your beverage wine refrigerator, it is better to distribute the load throughout the beverage wine refrigerator to avoid "all on top" or "all below" type loads.

- You can remove or relocate adjustable shelves to accommodate larger type of bottles (see removing shelves).
- Keep small gaps between the walls and the bottles to allow air circulation.
- Do not over load your wine refrigerator.
- Avoid obstructing the internal fans (located inside on the back panel of the beverage wine refrigerator).
- Do not try to slide the shelves outwards beyond the fixed position to prevent the bottles from falling.
- Do not pull out more than one loaded shelf at a time as this may cause the wine refrigerator to tilt forward if not properly installed.

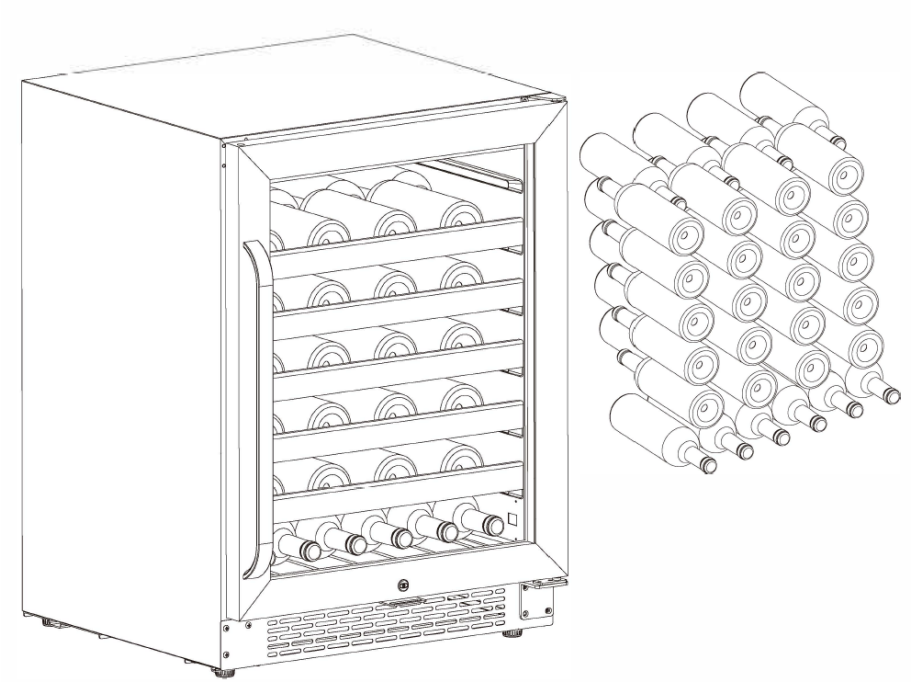

Shelf #1: 8 bottles
Shelf #2: 8 bottles
Shelf #3: 8 bottles
Shelf #4: 8 bottles
Shelf #5: 8 bottles
Bottom: 6 bottles

5 x 8 + 6 = 46 bottles
(standard size 750ml)

Storage

REMOVING SHELVES

- To remove any of the shelves from the rail compartment, move the shelf to the position where the notch of shelf is exactly under the plastic post and then lift it up and out.
- In order to replace the shelf, repeat steps described above in reverse. And make sure to engage the shelves with the small pegs of the extended rails when the model is equipped with roller system.

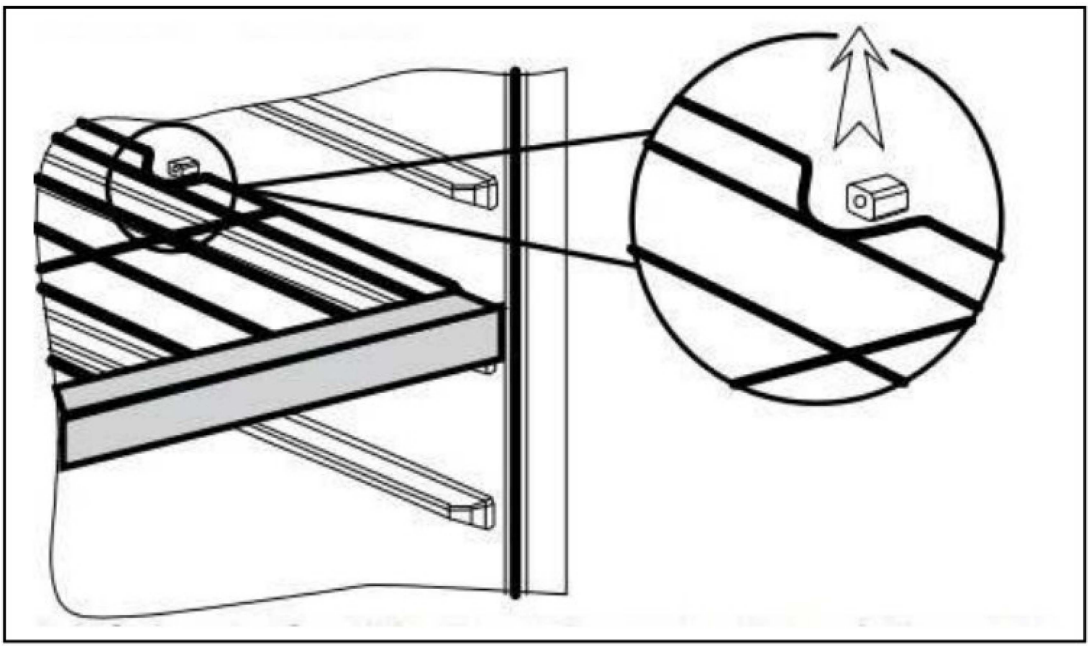

Care and Maintenance

CLEANING YOUR APPLIANCE

- Turn off the power, unplug the appliance, and remove all contents from the appliance and store them in a suitable place.
- Clean the inside, the door seal and the inside of the glass with a clean, damp cloth.
- Never use detergents or other substances that emit odors.
- Always keep the door closed when cleaning the outside of the appliance. Make sure no detergent odors penetrate into the appliance.
- Clean the side panels and door surfaces with a clean and soft cloth. If necessary, use a moist cloth. Alternatively, use a microfiber cloth.
- The humidity tray should be hand-washed with water and detergent. After cleaning, always make sure the tray is thoroughly rinsed with clean water before replacing.

PREMISES POWER FAILURE

- In the event of a power interruption, temperature settings automatically defaults to factory settings once power is restored.
- Factory default temperature setting is 54°F. To set a different desired temperature, refer to the "SETTING THE TEMPERATURE" and "°C and °F SELECTOR" section on page 10.
- Most power failures are corrected within a few hours and should not affect the temperature of your appliance if you minimize the number of times the door is opened. If the power is going to be off for a longer period of time, you need to take the proper steps to protect your contents.

VACATION TIME

- Short vacations: Leave the appliance operating during vacations of less than two days.
- Long vacations: If the appliance will not be used for an extended period, remove all items and turn off the appliance. Clean and dry the interior thoroughly.

MOVING YOUR APPLIANCE

- Remove all items inside the appliance.
- Securely tape down (we recommend using painter's tape) all loose items (shelves) inside your appliance.
- Turn the adjustable legs up to the base to avoid damage.
- Tape (we recommend using painter's tape) the door shut.
- Be sure the appliance stays secure in the upright position during transportation and protect the exterior of appliance with a blanket, or similar item.

PREPARING FOR STORAGE

If the beverage wine refrigerator will not be used for a long time, or is to be moved to another place, it will be necessary to defrost the unit and dry the interior.

1. Disconnect the beverage wine refrigerator from the power supply by removing the power plug from the wall socket.
2. Leave the door open to allow for air circulation and to prevent mold, mildew and unpleasant smells.

CAUTION: Store the unit out of the reach of children. If you have children, you may want to take additional precautions such as removing the door to prevent a child from being trapped inside the beverage wine refrigerator.

NOTE:

- *If the beverage wine refrigerator is unplugged, encounter power lost, or turned off; you must wait 3 to 5 minutes before restarting the beverage wine refrigerator.*
- *When the beverage wine refrigerator is used for the first time or restarted after having been shut off for a long time, there could be a few degrees variance between the temperature you select and the one indicated on the display. This is normal and it is due to the length of the inactivation time.*
- *The appliance should be located in the coolest area of the room, away from heat producing appliances, and out of any direct sunlight.*
- *Ensure that the appliance is adequately ventilated. Never obstruct the air vents.*
- *Close the door tightly and do not open the appliance too frequently or for a long period of time.*
- *Store the content in an organized way.*
- *Do not over load the appliance to allow air to circulate.*

Troubleshooting

Problem	Possible Causes	Solutions
The appliance does not operate	• There is a power failure • The appliance is not plugged in • A fuse has blown or the circuit breaker is tripped	• Ensure the appliance is plugged in and the power outlet has power • Replace the broken fuse or reset the breaker
The appliance is not cold enough	• The set temperature too high • The appliance is placed too close to a heat source • The door is opened too often • The door is not closed completely • The door gasket does not seal properly • The front bottom grille does not have sufficient ventilation	• Adjust the set temperature • Keep the appliance away from sunshine or other heat sources • Close the door tightly and do not open the door too frequently or for a long period of time • Ensure the door gasket is not loose. The front bottom grille must be completely unobstructed
The appliance turns itself on and off frequently	• The ambient room temperature is too low or high • A large amount of contents has been added to the appliance • The door is opened too often • The door is not closed completely • The door gasket does not seal properly	• Decrease or increase the ambient room temperature • To minimize internal temperature fluctuation, do not add large amount of contents at once. Close the door tightly and do not open the door too frequently or for a long period of time. • Ensure the door gasket is not loose.
The appliance makes too much noise	• The noise may come from the flow of the refrigerant and expansion of the inside walls may cause popping and crackling noises • Contraction and expansion of the inside walls may cause popping and crackling noises • The appliance is not level	• It is normal that as each cooling cycle ends, you may hear rattling or gurgling sounds caused by the flow of refrigerant in the appliance. The high efficiency compressor may make a pulsating or high pitched sound. • Some popping or cracking noises are normal. They are caused by expansion and contraction of the inside walls due to temperature changes. • Make sure the unit is on a hard and level surface. Do not place the appliance on carpet. • See Operating Noises.
The door does not close properly	• The appliance is not level • The door was reversed and not properly installed • The shelves are out of position	• Make sure the appliance is on a hard and level surface. Avoid placing the appliance on a carpeted or soft surface • Correctly install the shelves

Troubleshooting

Problem	Possible Causes	Solutions
Display flashing	• Set temperature has not been reached	• It is normal for the display to flash until the unit reaches the set temperature. Please note that the unit may take unto 24 hours to reach the set temperature if the cabinet is full.
Display “E1”, “E2”. “E5”, “E6”, “EU”, “LO”, or “HI”	• E1 E2 - air temperature sensor error • E5 E6 - defrost sensor error • EU - display error • LO - low temperature alarm • HI - high temperature alarm	• Contact Whynter Customer Support
The icon “--” is lit up and flashing in the temperature display	• The display temperature is out of the range	• Only temperatures within the range 16 - 99°F/-9 - 37°C the appliance can display will be shown. If the temperature is not within this range, the icon “--” will be displayed instead. That is normal.

ONE YEAR LIMITED WARRANTY

This WHYNTER product is warranted to the original owner, purchased from an authorized Whynter dealer within the 48 U.S. continental states, for one year from the original purchase date against defects in material and workmanship under normal residential usage. Should your WHYNTER product prove defective within one year from the date of purchase, contact Whynter's Customer Support Team with the serial number and proof of purchase to make a warranty claim. A Return Authorization Number must be issued before returning any parts or products. Parts or products received without a Whynter issued Return Authorization Number will be refused. Under this warranty, Whynter will repair or replace any parts found defective with new or remanufactured parts or exchange the defective product with a new, refurbished, or remanufactured product at our discretion. All defective products and parts covered by this warranty will be repaired or replaced on a mail-in basis to Whynter's Service Center. This warranty is not transferable. After the expiration of the warranty, the cost of labor and parts will be the responsibility of the original owner.

Return freight is prepaid by Whynter within two months of purchase. After two months to one year, the customer will be responsible for the return freight cost to Whynter's Service Center. Please package the product carefully in its original packaging to avoid damage in transit. Whynter is not responsible for damage resulting from shipper mishandling or improper packaging. Please retain the original box and packaging materials.

THIS WARRANTY DOES NOT COVER:

- Acts of God, such as fire, flood, hurricanes, earthquakes and tornadoes.
- Improper power supply such as power surge, low voltage, defective household wiring or inadequate fuses.
- Use in commercial or industrial applications.
- Damage, accidental or otherwise, to the WHYNTER Beverage Wine Refrigerator while in the possession of a consumer not caused by a defect in material or workmanship
- Damage caused by consumer misuse, tampering, or failure to follow the care and special handling provisions in the instructions.
- Damage to the finish of the case, or other appearance parts caused by wear.
- Damage caused by repairs or alterations to the product by anyone other than authorized by the manufacturer.
- Removal, Replacement Packaging, Freight and Insurance cost for the warranty service.

DISCLAIMER OF IMPLIED WARRANTIES; LIMITATION OF REMEDIES

CUSTOMER'S SOLE AND EXCLUSIVE REMEDY UNDER THIS LIMITED WARRANTY SHALL BE PRODUCT REPAIR OR REPLACEMENT AS PROVIDED HEREIN. CLAIMS BASED ON IMPLIED WARRANTIES, INCLUDING WARRANTIES OF MERCHANTABILITY OR FITNESS FOR A PARTICULAR PURPOSE, ARE LIMITED TO ONE YEAR OR THE SHORTEST PERIOD ALLOWED BY LAW, BUT NOT LESS THAN ONE YEAR. WHYNTER SHALL NOT BE LIABLE FOR CONSEQUENTIAL OR INCIDENTAL DAMAGES SUCH AS PROPERTY DAMAGE AND INCIDENTAL EXPENSES RESULTING FROM ANY BREACH OF THIS WRITTEN LIMITED WARRANTY OR ANY IMPLIED WARRANTY. SOME STATES AND PROVINCES DO NOT ALLOW THE EXCLUSION OR LIMITATION OF INCIDENTAL OR CONSEQUENTIAL DAMAGES, OR LIMITATIONS ON THE DURATION OF IMPLIED WARRANTIES, SO THESE LIMITATIONS OR EXCLUSIONS MAY NOT APPLY TO YOU. THIS WRITTEN WARRANTY GIVES YOU SPECIFIC LEGAL RIGHTS. YOU MAY ALSO HAVE OTHER RIGHTS THAT VARY FROM STATE TO STATE.

The warranty, product contents and specifications are subject to change at any time without notice; please refer to www.whynter.com for the most current information.

To register your warranty, please visit www.whynter.com and fill out the online Warranty Registration form. Please be sure to include a copy of your purchase invoice.

To obtain service or information, contact Whynter LLC via email at support@whynter.com or call 866-WHYNTER (866-949-6837).

Copyright © 2021 Whynter LLC

www.whynter.com