TRICITY BENDIX

OPERATING AND INSTALLATION INSTRUCTIONS



REFRIGERATOR

TBUR 120

2222683-12

Download from Www.Somanuals.com. All Manuals Search And Download.

⚠ Important Safety Instructions

These warnings are provided in the interests of your safety. Ensure that you understand them all before installing or using this appliance. Your safety is of paramount importance. If you are unsure about any of the meanings of these warnings contact the Customer Care Department.

Prior to Installation

- Check the appliance for transport damage. Under no circumstance should a damaged appliance be installed. In the event of damage please contact your retailer.

Installation

- This appliance is heavy. Care should be taken when moving it.
- It is dangerous to alter the specifications or attempt to modify this product in any way.
- Ensure that the appliance does not stand on the electrical supply cable. **Important:** if the supply cable is damaged, it must be replaced by authorised service or qualified personnel using a special cable of the same type.
- Any electrical work required to install this appliance should be carried out by a qualified electrician or competent person.
- Parts which heat up should not be exposed. Whenever possible, the back of the appliance should be close to a wall, but leaving the required distance for ventilation, as states in the installation instructions.
- The appliance should be left for 2 hours after installation before it is turned on, in order to allow the refrigerant to settle.

Refrigerant

- The refrigerant isobutane (R600a) is contained within the refrigerant circuit of the appliance, a natural gas with a high level of environmental compatibly, which is nevertheless flammable.
- During transportation and installation of the appliance, be certain that none of the components of the refrigerant circuit become damaged.
- If the refrigerant circuit should become damaged: - avoid open flames and sources of ignition.
  - thoroughly ventilate the room in which the appliance is situated.

Child Safety

- Do not allow children to tamper with the controls or play with the product.
- There is a risk of suffocation! Keep packaging material away from children!

General Safety

- **This appliance contains hydrocarbons in its cooling unit; maintenance and recharging must therefore only be carried out by authorised technicians.**
- **Take utmost care when handling your appliance so as not to cause any damages to the cooling unit with consequent possible fluid leakages.**
- **The appliance must not be located close to radiators or boilers.**
- **Avoid prolonged exposure of the appliance to direct sunlight.**
- **Do not use other electrical appliances (such as ice cream makers) inside of refrigerating appliances.**

During Use

- This appliance is designed for domestic use only, specifically for the storage of edible foodstuffs only. It is not intended for commercial or industrial use.
- Containers with flammable gases or liquids can leak at low temperatures. Do not store any containers with flammable materials, such as spray cans, fire extinguisher refill cartridges etc. in the refrigerator.
- Frozen food should not be refrozen once it has thawed out.
- Do not place carbonated or fizzy drinks in the freezer compartment.
- Ice lollies can cause ‘frost/freezer burns’ if consumed straight from the star compartement.
- Do not remove items from the freezer compartement if your hands are damp/wet, as this could cause skin abrasions or frost/freezer burns.
- Bottles and cans must not be placed in the freezer compartment they can burst when the contents freeze.
- Manufacturers’ recommended storage times should be adhered to.Refer to relevant instructions.

Maintenance and Cleaning

- Before cleaning, always switch off the appliance and disconnect from the electrical supply.
- When unplugging always pull the plug from the mains socket, do not pull on the cable.

Download from Www.Somanuals.com. All Manuals Search And Download.

Servicing

- This product should be serviced by an authorised engineer and only genuine spare parts should be used.
- Under no circumstances should you attempt to repair the appliance yourself.Repairs carried out by inexperienced persons may cause injury or serious malfunctioning. Contact your local Zanussi Service Force Centre.

At the end of the Appliance Life

- When disposing of your appliance use an authorised disposal site.

  The symbol  on the product or on its packaging indicates that this product may not be treated as household waste. Instead it shall be handed over to the applicable collection point for the recycling of electrical and electronic equipment. By ensuring this product is disposed of correctly, you will help prevent potential negative consequences for the environment and human health, which could otherwise be caused by inappropriate waste handling of this product. For more detailed information about recycling of this product, please contact your local city office, your household waste disposal service or the shop where you purchased the product.
- Remove the plug and ensure that any locks or catches are removed, to prevent young children being trapped inside.

Contents

Instructions for the User

Important Safety Instructions 2

Operation 4
Before use 4
Setting the temperature 4
Fresh food refrigeration 4
The door shelves 4
The ✱✱✱✱-star compartment 5
Freezing fresh food 5
Frozen food storage 5
Thawing 5
Making ice cubes 5
Normal Operating Sounds 5

Health and Safety Guidelines 6

Defrosting 7

Maintenance and Cleaning 8
Internal cleaning 8
Periodic cleaning 8
Changing the light bulb 8
When the appliance is not in use 8

Something Not Working? 9

Service and Spare Parts 10

Customer Care Department 10

Guarantee Conditions 11

Instructions for the Installer

Technical Specifications 12

Installation 12
Positioning 12

Door reversal 13
Inner door reversal 14

Electrical Connection 15

Building-in Instructions 16
Grid preparation 16
Building in the appliance under a worktop 16
Fitting the plinth 19

Download from Www.Somanuals.com. All Manuals Search And Download.

Operation

Before use

Remove all securing tapes. Wash inside the appliance with lukewarm water and bicarbonate of soda (5 ml to 0.5 litre of water). Do not use soap or detergent as the smell may linger. Dry thoroughly.

Setting the temperature

The temperature inside the refrigerator is regulated by a thermostat control knob with 6 temperature positions and one «OFF» (O) position.
Position 1 = minimum coldness
Position 6 = maximum coldness
Turn the thermostat control knob to the required position.
An intermediate position is usually the most suitable, although the temperature will be affected by:

- Room temperature
- How often the door is opened
- How much food is stored
- Position of the appliance

In determining the correct temperature control setting all these factors have to be considered and some experimentation may be necessary.
When altering the temperature setting, allow 24 hours for the temperature to stablise before making further changes.

Important

During prolonged periods of abnormally hot weather, if the thermostat is set on too high a number, the cooling system may operate continuously and the fridge cooling plate may not defrost. Turning the knob to a lower number will cause the automatic defrosting to resume.

If you wish to return to a lower temperature, turn the thermostat knob to a higher number, however you should turn the setting lower occasionally to allow automatic defrosting.

Fresh food refrigeration

To obtain the best performance, do not store warm food or evaporating liquids in the refrigerator; do cover or wrap the food, particularly if it has a strong flavour.
Do not cover the shelves with any protective material, such as paper, cardboard or plastic, which could obstruct the air circulation.
To help you use your refrigerator correctly, here are some more useful hints:
Raw meat (beef, pork, lamb & chicken or poultry): wrap in polythene bags and place on top of the salad bin.

Meat can only be stored safely in this way for one or two days at the most.

Fruit & vegetables: these should be thoroughly cleaned and placed in the bottom salad bin.

Butter & cheese: these should be placed in special airtight containers or wrapped in aluminium foil or polythene bags to exclude as much air as possible.

Milk bottles: these should have a cap and should be stored in the bottle rack on the door.

The walls of the refrigerator are equipped with runners so that shelves can be positioned as desired.
For better use of space, the front half-shelves can lie over the rear ones (see fig.).

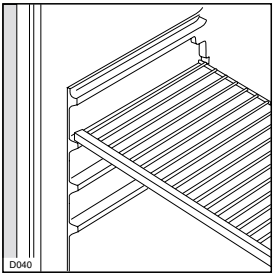

The door shelves

To permit storage of food packages of various sizes, the central door shelf can be adjusted in height.
To do this proceed as in the figure.

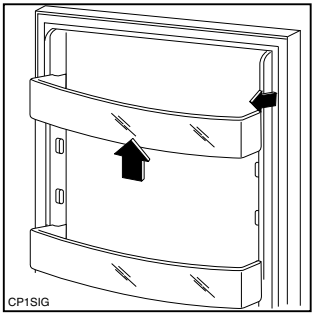

For more thorough cleaning, the top door shelf and the bottle shelf can be removed by pulling them in the director of the arrows, then refitting them in position.

Download from Www.Somanuals.com. All Manuals Search And Download.

The ****-star compartment

This compartment is suitable for freezing fresh food, for the storage of commercially frozen food and for ice cube making.

Freezing fresh food

To freeze fresh foods it is not necessary to change the setting of the thermostat knob.
However, for a quicker freezing operation, turn the thermostat knob to the coldest setting; but remember that, in this condition, the refrigerator compartment temperature might drop below 0°C. If this occurs reset thermostat knob to a warmer setting.
Only freeze top quality, fresh and thoroughly cleaned foodstuffs.
Do not allow fresh food to touch food which is already frozen.
During the freezing process, ensure that the freezer compartment door remains closed.

Frozen food storage

Storing ready-frozen foods is quite straightforward. The packs can be placed beside each other or on top of each other.
You are strongly advised to place ready-frozen food in the compartment as quickly as possible after purchase and we therefore recommend that you buy them last. Also ensure that the external packaging is intact.
Packaging which is swollen or has traces of refrozen water droplets on the pack could indicate that the product has not been kept at a suitable temperature and that it may have lost its original quality.
Partially thawed food must not be refrozen, it must be consumed within 24 hours.
Never exceed the storage times indicated.

Do not open the ****-star compartment door too often and do not leave open longer than necessary.

Important
In the event of a power cut do not open the door. The food in the ****-star compartment will not be affected if the power cut is short and if the compartment is full. Should the food begin to thaw, it must be consumed quickly and must not be re-frozen.

Thawing

Food can be thawed in a number of ways, depending on the type of food and the size of the packs.
Meat, fish and fruit should be thawed in the refrigeration compartment and small pieces of meat can even be cooked while still frozen, but you must ensure that it is thoroughly cooked through.
Vegetables should be directly immersed in boiling water; ready-cooked dishes can be placed directly in the oven in their aluminium wrapping.
A microwave oven is particularly suitable for thawing any type of frozen or deep-frozen food: follow the oven instructions, particularly regarding the placement of aluminium wrapping in the oven.

Making ice cubes

The appliance is provided with a plastic ice cube tray. Fill the tray 3/4 full to allow the ice to expand and place it in the ****-star compartment. To turn out the ice cubes simply give the tray a slight twist to release the cubes.

Never try to free an ice tray that is frozen to the **-star compartment using a sharp or pointed object.**

Important
Do not consume ice-lollies which have just come out of the ****-star compartment. Their extremely low temperature can cause frost burns. Do not remove items from the ****-star compartment if your hands are damp/wet, as this could cause skin abrasions or "frost/freezer burns".

Normal Operating Sounds

You may hear faint gurgling or bubbling sounds when the refrigerant is pumped through the coils or tubing at the rear, to the cooling plate.

When the compressor is on, the refrigerant is being pumped round, and you will hear a whirring sound or pulsating noise from the compressor.

A thermostat controls the compressor, and you will hear a faint ‘click’ when the thermostat cuts in and out.

Download from Www.Somanuals.com. All Manuals Search And Download.

Health and Safety Guidelines

Because of consumer demand, preservatives have been removed from many pre-prepared foods.

This together with the changes in shopping habits to a once-a-week shop, mean that safe handling and storage of food is even more important than ever.

The following tips should help you to ensure that the food in your home is in as perfect condition as possible.

- Keep the time between buying chilled food and placing it in your fridge as short as possible. Tests to have shown that the temperature of 1 litre of orange juice rose to 22°C in an hour between the supermarket and home. It then took 11 hours to get down to 7°C in the refrigerator.
- Keep the refrigerator door closed as much as possible.
- Do not push food together too much, try to allow air to circulate around each item.
- Cool cooked food as quickly as possible but do NOT place in the refrigerator until cool. (Leave food in a cool place in order that it can then be placed in the refrigerator as soon as possible).
- Do NOT mix raw and cooked meat, they must be in separate containers. Take care not to let the meat juices drip onto other food. If the meat does drip, remove everything and clean thoroughly.
- Do not store food uncovered.
- Remove suspect food from your refrigerator and clean the interior (see “Maintenance and Cleaning”).
- Never allow spillages to dry and harden.
- Store eggs in the egg rack provided in the refrigerator door. Discard any broken or chipped eggs.
- Regularly check the refrigerator door seal to ensure that it is clean and free from debris.
- Always wash your hands with soapy water and dry them with a clean towel before handling food.
- Keep work surfaces clean and avoid cross contamination by not using the same work surface or knife, without washing them thoroughly in between.

Download from Www.Somanuals.com. All Manuals Search And Download.

Defrosting

The refrigerator automatically defrosts every time the compressor stops. The water is discharged, via the pipe, into a tray located below the appliance, where it evaporates.

Important
To avoid defrost water overflowing and dripping onto the food in the fridge, periodically clean the water discharge hole (F) situated under the salad drawers. Use the special cleaner provided (P) which you will find already inserted into the discharge hole.

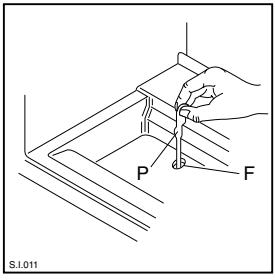

The freezer compartment, however, will become progressively covered with frost. This should be removed with the special plastic scraper provided, whenever the thickness of the frost exceeds 4 mm. During this operation it is not necessary to switch off the power supply or to remove the foodstuffs.

Never use sharp metal tools to scrape off frost from the evaporator as you could damage it.

Do not use a mechanical device or any artificial means to speed up the thawing process other than those recommended by the manufacturer.

However, when the ice becomes very thick on the inner liner, complete defrosting should be carried out as follows:

1. pull out the plug from the wall socket or turn the thermostat knob to the «O» setting;
2. remove any stored food, wrap it in several layers of newspaper and put it in a cool place;
3. leave the door open, place a basin on the top shelf of the refrigerator compartment, under the drain hole, remove the plug as shown in the figure;

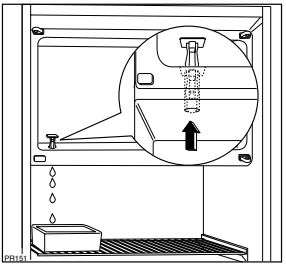

4. when defrosting is completed, dry the interior thoroughly and refit the plug.

Keep the scraper for future use; turn the thermostat knob back to the required setting or replace the plug in the power socket. After two or three hours, reload the previously removed food into the compartment.

Important
A temperature rise of the frozen food packs, during defrosting, may shorten their safe storage life.

Download from Www.Somanuals.com. All Manuals Search And Download.

Maintenance and Cleaning

Warning
Before any maintenance or cleaning work is carried out, DISCONNECT the appliance from the ELECTRICITY supply.

Important
This appliance contains hydrocarbons in its cooling unit maintenance and recharging must therefore only be carried out by authorised technicians.

Internal cleaning

Clean the inside and accessories with warm water and bicarbonate of soda (5ml to 0.5 litre of water). Rinse and dry thoroughly.

NEVER USE DETERGENTS, ABRASIVE POWDERS, HIGHLY PERFUMED CLEANING PRODUCTS OR WAX POLISHES, TO CLEAN THE INTERIOR AS THESE WILL DAMAGE THE SURFACE AND LEAVE A STRONG SMELL.

Clean the drain hole of the water trough at regular intervals and make sure that the drain hole is never obstructed, so that the defrost water may flow freely.

Important
Do not use abrasive products.

Periodic cleaning

The appliance is equipped with a ventilation grid. Keep clean to guarantee good ventilation and good working order of the appliance.
An accumulation of dust will affect the performance of the appliance and cause excessive electricity consumption.
The structure of the appliance permits cleaning of the rear zone close to the wall, using a vacuum cleaner.

1. Remove the plinth (1), then the ventilation grid (2);
2. Carefully pull the air deflector out (3), checking that there is no water left from the defrosting.

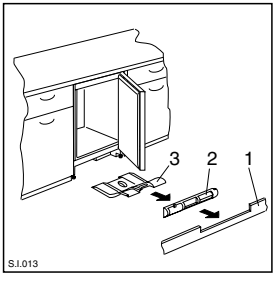

Changing the light bulb

Should the interior light fail to work, first switch off the appliance and disconnect from the electricity supply, then replace the bulb as follows:

1. Unscrew the light cover and then pull it outward by pressing as shown in the figure. Unscrew the bulb and replace it with a new 15 watt bulb (available from your nearest Service Force centre).
2. Replace the light cover by sliding it into its original position and replacing the screw.

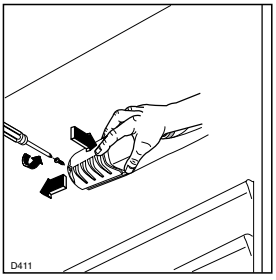

When the appliance is not in use

When the appliance is not in use for long periods, disconnect from the electricity supply, empty all foods and clean the appliance, leaving the door ajar to prevent unpleasant smells.

Download from Www.Somanuals.com. All Manuals Search And Download.

Something not Working?

Before contacting your local Service Force Centre check the following points.

IMPORTANT: If you call out an engineer to a fault listed below, or to repair a fault caused by incorrect use or installation, a charge will be made even if the appliance is under guarantee.

Symptom	Solution
No power to appliance	- Check there is power at the socket. - Check there is not a power cut by checking the household lights. - Check the fuse has not blown.
The light does not come on	- Ensure that the bulb is correctly fitted. - Replace the bulb if it has blown. - Check the door light switch is not jammed.
The temperature in the fridge or freezer section is too high	- Check the ambient temperature is within the appliances operating limits of 10ÞC to 38ÞC. - Check the thermostat control knob is turned to the correct setting relative to ambient conditions.
The compressor runs continuosly	- Adjust the thermostat control knob to give correct temperature control. See page 4. - Check that the door is closed. - Large quantities of food have recently been placed in the cabinet and/or door is frequently opened. - Check that air ventilation is not obstructed.
Excessive frost and ice has built up	- Ensure the door is not left open. - Check that nothing is preventing the door from closing. - Is the door gasket intact and clean.
Noise	- Refer to normal operating sounds.
Water under the salad bins	- Check the drain hole is not blocked. (see Maintenance and Cleaning).

If after the above checks, there is still a fault, call your local Service Force Centre.

In-guarantee customers should ensure that the above checks have been made as the engineer will make a charge if the fault is not a mechanical or electrical breakdown.

Please note that proof of purchase is required for any in-guarantee service calls.

Download from Www.Somanuals.com. All Manuals Search And Download.

Service and Spare Parts

SERVICE FORCE

In the event of your appliance requiring service, or if you wish to purchase spare parts, please contact your local Service Force Centre by telephoning:-

08705 929929

Your telephone call will be automatically routed to the Service Force Centre covering your post code area.

For the address of your local Service Force Centre and further information about Service Force, please visit the website at **www.serviceforce.co.uk**

Before calling out an engineer, please ensure you have read the details under the heading “Something Not Working.”

When you contact the Service Force Centre you will need to give the following details:

1. Your name, address and post code
2. Your telephone number
3. Clear and concise details of the fault
4. The model and serial number of the appliance (found on the rating plate)
5. The purchase date

Please note that a valid purchase receipt or guarantee documentation is required for in-guarantee service calls.

For Customer Service in Ireland please contact us at the address below:

Tricity Bendix
Electrolux Group (Irl) Ltd
Long Mile Road
Dublin 12
Republic of Ireland

Tel: + 353 1 4090751

Email: service.eid@electrolux.ie

Customer Care Department

For general enquiries concerning your Tricity Bendix appliance or for further information on Tricity Bendix products, please contact our Customer Care Department by letter as follows

Customer Care Department
Tricity Bendix Major Appliances
Addington Way
Luton
Bedfordshire
LU4 9QQ
08705 950 950 *

* calls to this number may be recorded for training purposes.

Download from Www.Somanuals.com. All Manuals Search And Download.

Guarantee Conditions

Standard guarantee conditions

We, Tricity Bendix, undertake that if within 24 months of the date of purchase this Tricity Bendix appliance or any part thereof is proved to be defective by reason only of faulty workmanship or materials, we will, at our option repair or replace the same FREE OF CHARGE for labour, materials or carriage on condition that:

- The appliance has been correctly installed and used only on the electricity supply stated on the rating plate.
- The appliance has been used for normal domestic purposes only, and in accordance with the manufacturer's instructions.
- The appliance has not been serviced, maintained repaired, taken apart or tampered with by any person not authorised by us.
- All service work under this guarantee must be undertaken by a Service Force Centre.
- Any appliance or defective part replaced shall become the Company's property.
- This guarantee is in addition to your statutory and other legal rights.

Home visits are made between **8.30am** and **5.30pm** Monday to Friday. Visits may be available outside these hours in which case a **premium** will be charged.

Exclusions

This guarantee does not cover:

- Damage or calls resulting from transportation, improper use or neglect, the replacement of any light bulbs or removable parts of glass or plastic.
- Costs incurred for calls to put right an appliance which is improperly installed or calls to appliances outside the United Kingdom.
- Appliances found to be in use within a commercial environment, plus those which are subject to rental agreements.
- Products of Tricity Dendix manufacture which are not marketed by Tricity Bendixi.

European Guarantee

If you should move to another country within Europe then your guarantee moves with you to your new home subject to the following qualifications:

- The guarantee starts from the date you first purchased your product.
- The guarantee is for the same period and to the same extent for labour and parts as exists in the new country of use for this brand or range of products.
- This guarantee relates to you and cannot be transferred to another user.
- Your new home is within European Community (EC) or European Free Trade Area.
- The product is installed and used in accordance with our instructions and is only used domestically, i.e. a normal household.
- The product is installed taking into account regulations in your new country.

Before you move please contact your nearest Customer Care centre, listed below, to give them details of your new home. They will then ensure that the local Service Organisation is aware of your move and able to look after you and your appliance.

France	Senlis	+33 (0) 3 44 62 29 29
Germany	Nürnberg	+49 (0) 800 234 7378
Italy	Pordenone	+39 (0) 0434 39 4700
Sweden	Stockholm	+46 (0) 8 672 53 90
UK	Luton	+44 (0) 8705 950 950
Ireland	Dublin	+353 (0) 1 4090751

Download from Www.Somanuals.com. All Manuals Search And Download.

Technical Specifications

DIMENSIONS			Height	81,5 cm
			Width	59,6 cm
			Depth	54 cm
POWER SUPPLY VOLTAGE AND FREQUENCY			220-240 V / 50 Hz	
TOTAL POWER ABSORBED			90 W	
AVERAGE DAILY UNITS ELECTRICITY(*)			0,75 kWh	
TOTAL GROSS CAPACITY		122 l		
NET CAPACITY	Fridge	103 l		
NET CAPACITY	✱✱✱✱ compartment	17 l		
STAR RATING			✱✱✱✱	

(*) This figure is based on standard test results in accordance with European Standard EN153. Actual consumption will depend on how the appliance is used and where it is located.

Installation

Warning
IF YOU ARE DISCARDING AN OLD APPLIANCE THAT HAS A LOCK OR CATCH ON THE DOOR, YOU MUST ENSURE THAT IT IS MADE UNUSABLE TO PREVENT YOUNG CHILDREN BEING TRAPPED INSIDE.

Depending upon the position which you choose for your appliance, you may wish to reverse the way in which the door opens. To do this, refer to instructions under “Door reversal”.

Positioning

The appliance should only be installed at a location where the ambient temperature corresponds to the climate classification indicated on the rating plate, which is located on the inside right of the appliance.
The following table shows which ambient temperature is correct for each climate classification.

SN	+10°C	to	+32°C
ST	+18°C	to	+38°C

The appliance should be located in a dry atmosphere, out of direct sunlight and away from continuous heat and extreme temperature, e.g. not next to a boiler or radiator or in a very cold room e.g. an outhouse. If these temperatures are exceeded i.e. warmer or colder, then the appliance may not operate correctly.

For building-in and door reversal instructions please refer to the relevant instructions on the following pages.

Important
It must be possible to disconnect the appliance from the mains power supply; the plug must therefore be easily accessible after installation.

Download from Www.Somanuals.com. All Manuals Search And Download.

Door reversal

To reverse the opening direction of the door, proceed as shown in the figures:

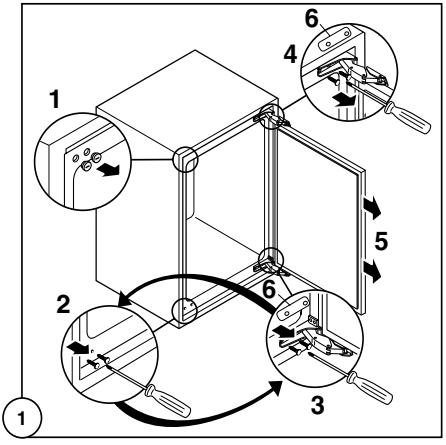

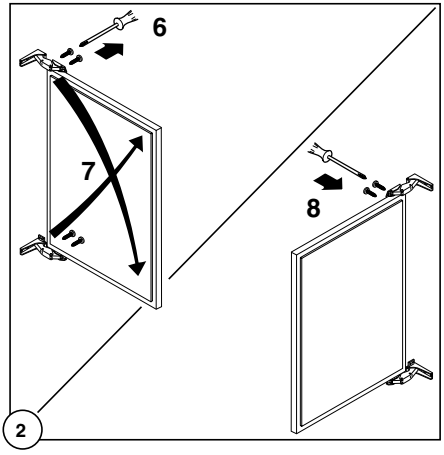

Attention

After completion of the door reversing operation, check that the door gasket adheres to the cabinet. If the ambient temperature is cold (i.e. in Winter), the gasket may not fit perfectly to the cabinet. In that case, wait for the natural fitting of the gasket or accelerate this process by heating up the part involved with a normal hairdryer on a low setting.

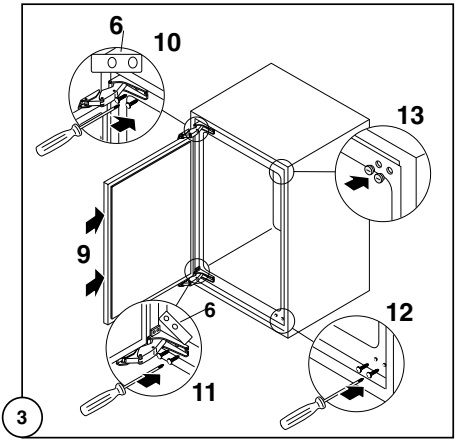

Download from Www.Somanuals.com. All Manuals Search And Download.

Inner door reversal

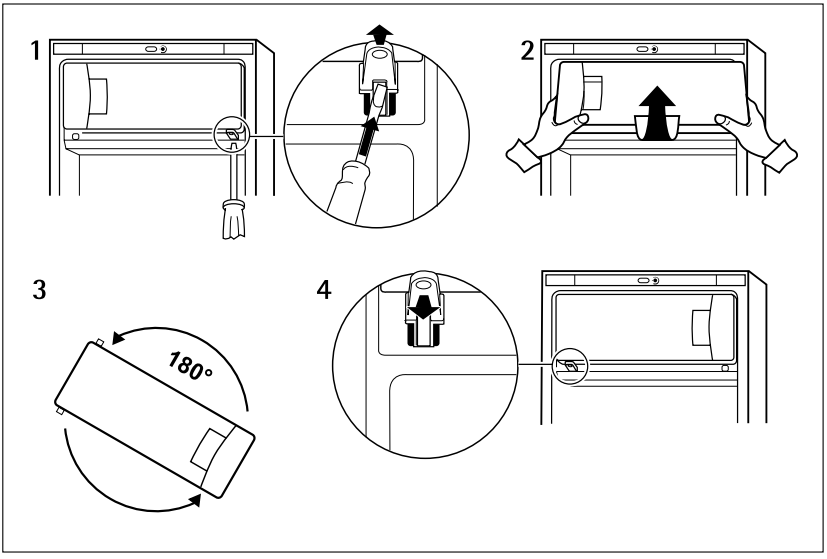

Download from Www.Somanuals.com. All Manuals Search And Download.

Electrical Connection

WARNING
THIS APPLIANCE MUST BE EARTHED.
The manufacturer declines any liability should this safety measure not be observed.

If the plug that is fitted to your appliance is not suitable for your socket outlet, it must be cut off and the appropriate plug fitted.

Remove the fuse from the cut off plug.

The cut off plug should then be disposed of to prevent the hazard of shocks in case it should be plugged into a 13amp socket in another part of your home.

Important
The wires in the mains lead are coloured in accordance with the following code:

Green and Yellow - Earth
Blue - Neutral
Brown - Live

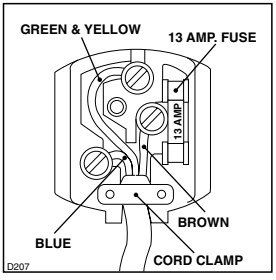

If you fit your own plug, the colours of the wires in the mains lead of your appliance, may not correspond with the markings identifying the terminals in your plug, proceed as follows:

Connect the Green and the Yellow (earth) wire to the terminal in the plug which is marked with the letter «E» or the earth symbol ⏚ , or coloured green and yellow.

Connect the blue (neutral) wire to the terminal in the plug which is marked with the letter «N» or coloured black.

Connect the brown (live) wire to the terminal in the plug which is marked with the letter «L» or coloured red.

The plug moulded onto the lead incorporates a fuse. For replacement, use a 13amp BS1362 fuse. Only ASTA or BSI approved fuses should be used.

The plug must not be used if the fuse cover/carrier is lost. The cover/carrier is indicated by the coloured insert at the base of the plug.

This appliance complies with the following E.E.C. Directive:

CE
- **73/23 EEC** of 19.2.73 (Low Voltage Directive) and subsequent amendments.
- **87/308** of 2.6.87 (Radio Interference Suppression) and subsequent amendments.
- **89/336 EEC** of 3.5.89 (Electromagnetic Compatibility Directive) and subsequent amendments.

Please ensure that when the appliance is installed it is easily accessible for the engineer in the event of breakdown.

Download from Www.Somanuals.com. All Manuals Search And Download.

Building-in instructions

Before carrying out any work, remove the plug from the power socket.

Grid preparation

Left door opening:

Remove the left side (A) of the grid cutting it from the rear (see figure).

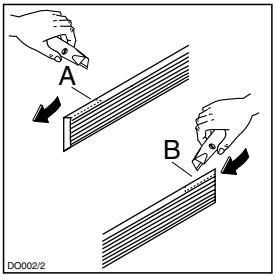

Right door opening:

Remove the right side (B) of the grid cutting it from the rear (see figure).

To position the grid on the appliance proceed as follows:
Apply the grid to the base of the appliance by pushing on to the clasps (a) until they click.

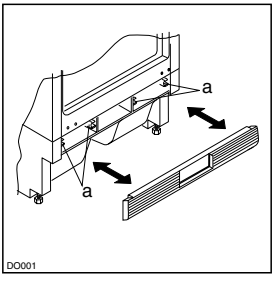

Building in the appliance under a worktop

The dimensions of the recessed installation area must correspond with those indicated in the figure.

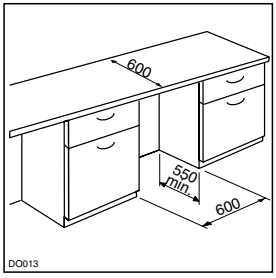

Installation kit

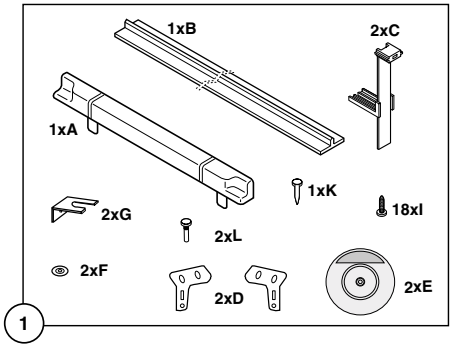

1. Two cabinet securing brackets are supplied with the installation pack. They need to be assembled onto the cabinet prior to cabinet being pushed into the Kitchen aperture.
   - To fit these brackets remove the two screws at the top left and right hand front corners of the cabinet.
   - Position the two brackets as shown in the figure and replace the two securing screws.

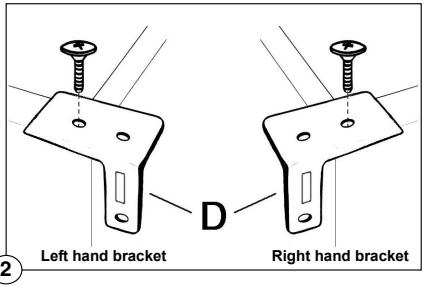

Download from Www.Somanuals.com. All Manuals Search And Download.

2. Push the appliance into place. The plug socket necessary for connection of the appliance to the electricity supply should be positioned, so that the plug is not placed in the recess.

3. To adjust the height proceed as follows:
   - Loosen or tighten the two front feet.
   - The rear feet are adjusted by turning the screw in the front kick plate to the left or right.

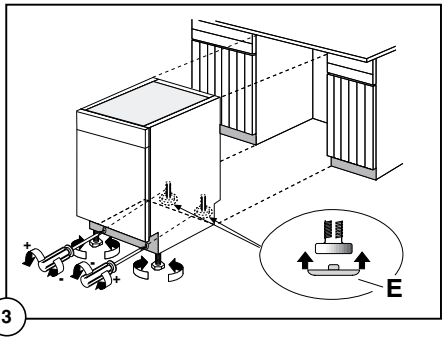

If necessary, pads (E) are supplied for the rear feet to make sliding the appliance in and out of the recess easier. To fit the pads, press them onto the rear feet.
If required, the dimensions of these pads can be reduced by breaking them where marked.

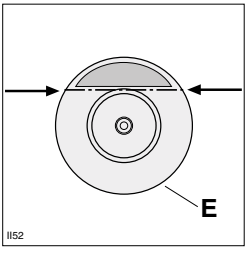

4. The joint cover (B) is to be assembled after having installed the appliance in the recess.

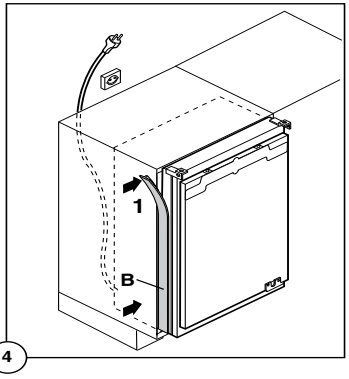

5. Screw appliance into place and retain the cabinet with screws (I) through the securing brackets into the worktop or adjacent woodwork as necessary.

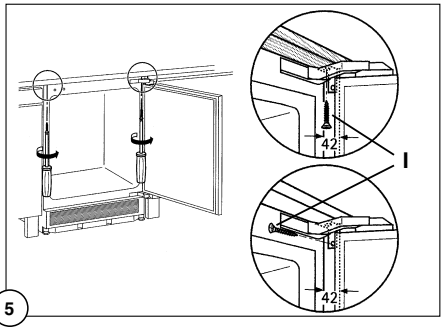

6. To mount the furniture door proceed as shown in the figures:

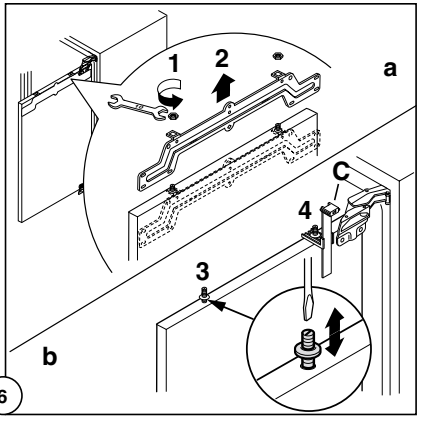

Download from Www.Somanuals.com. All Manuals Search And Download.

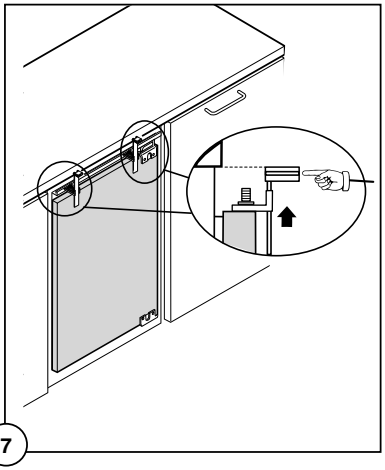

7

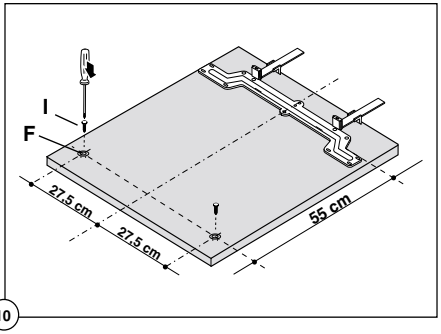

10

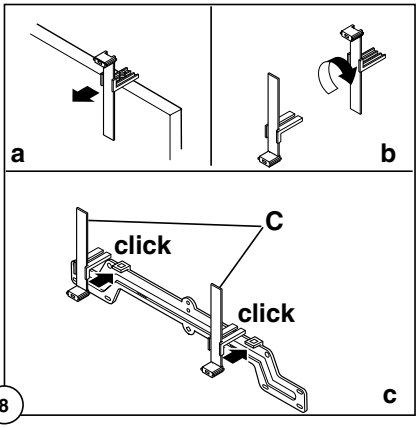

8

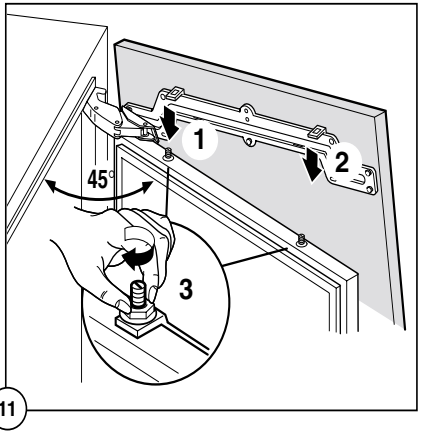

11

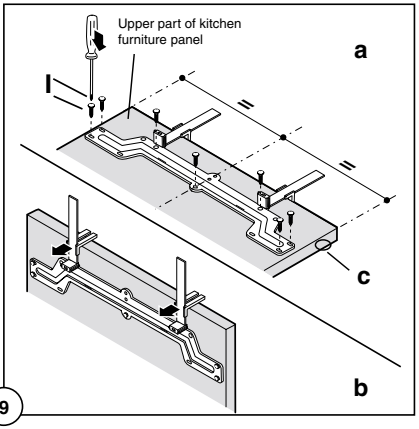

9

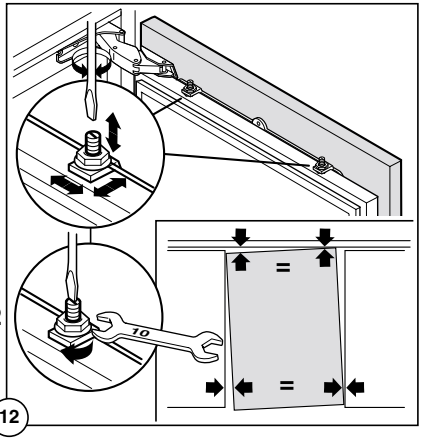

12

Download from Www.Somanuals.com. All Manuals Search And Download.

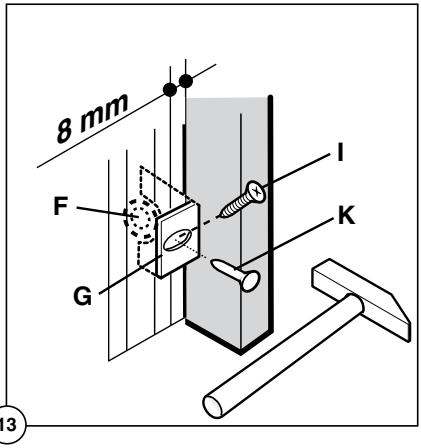

13

7. Refit the covering strip (A).

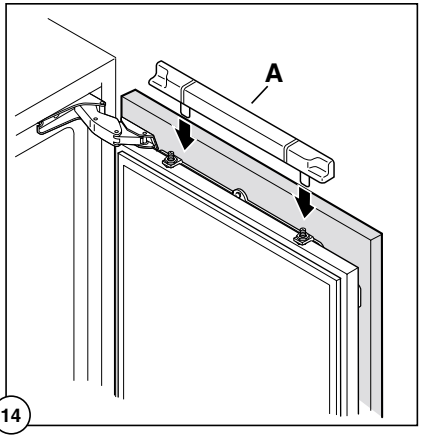

14

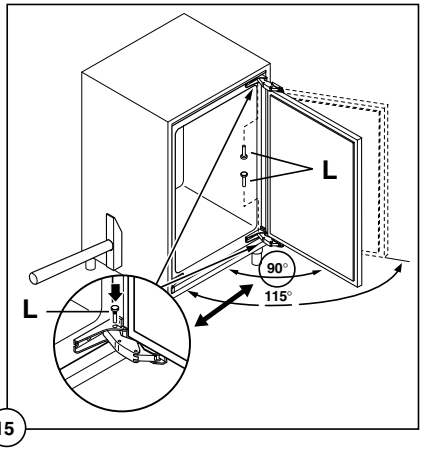

15

Fitting the plinth

Important
For the efficient operation of the appliance, it is important that the original ventilation grid is used.

- For an opening height dimension A=820 mm and a plinth height dimension a=100 mm, the plinth may be fitted without adjustments. The same applies to an opening height dimension B=870 mm and a plinth height dimension b=150 mm.
- For plinth heights greater than a=100 mm, b=150 mm, a cut should be made in the plinth, 580 mm wide, in the centre of the appliance position, leaving a remaining height of a=100 mm, b=150 mm.
- Attach plinth to the kitchen units.

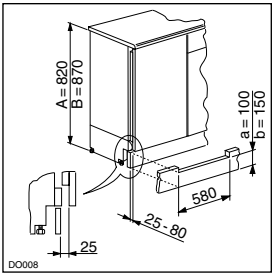

Important
The plinth must be positioned at a minimun distance of 25 mm from the door.

Download from Www.Somanuals.com. All Manuals Search And Download.

TRICITY BENDIX

Tricity Bendix, Addington Way Luton Bedfordshire LU4 9QQ

Consumer care telephone number……08705 950950

© Electrolux plc 2006

The Electrolux Group. *The world's No.1 choice.*

The Electrolux Group is the world's largest producer of powered appliances for kitchen, cleaning and outdoor use. More than 55 million Electrolux Group products (such as refrigerators, cookers, washing machines, vacuum cleaners, chain saws and lawn mowers) are sold each year to a value of approx. USD 14 billion in more than 150 countries around the world.

Download from Www.Somanuals.com. All Manuals Search And Download.

Free Manuals Download Website

http://myh66.com

http://usermanuals.us

http://www.somanuals.com

http://www.4manuals.cc

http://www.manual-lib.com

http://www.404manual.com

http://www.luxmanual.com

http://aubethermostatmanual.com

Golf course search by state

http://golfingnear.com

Email search by domain

http://emailbydomain.com

Auto manuals search

http://auto.somanuals.com

TV manuals search

http://tv.somanuals.com