INSTALLATION, OPERATION and USER'S GUIDE

REFRIGERATOR

7.7 cu ft Top Mount Freezer
Left Hand & Right Hand Hinge
Stainless Steel & Black



MODELS:

BLACK:
RHH: 140-2712
LHH: 140-2742

STAINLESS:
RHH: 140-4712
LHH: 140-4742

PLEASE READ THESE INSTRUCTIONS CAREFULLY BEFORE INSTALLING AND/OR OPERATING THE APPLIANCE.

GETTING STARTED

Please carefully read this Manual before installation and operation of this appliance, and follow the requirements given in this Manual in operation. The working instructions provided in this Manual are essential for keeping this appliance in good condition.

Follow these instructions carefully in order to avoid possible accidents.

Please keep this Manual properly. Carefully complete the warranty card at purchase and keep it at hand for application for warranty service.

SAFETY PRECAUTIONS

This symbol means that the behavior as described is not allowed, failing which may give rise to product damages or personal injuries.

⃠ This symbol means that the behavior as described is not allowed, failing which may give rise to product damages or personal injuries.	ⓘ This symbol means that the safe operation of the product and the personal safety of the operator are concerned, and that the operation must be performed in strict compliance with the requirements as specified, failing which may give rise to the product damages or personal injuries.	⚠ This symbol means that the operator must pay attention to the information as described, failing which may give rise to the product damages or other losses due to the improper operation.

This appliance is designed as built-in refrigerator and is intended to be used in recreational vehicle. Failure to follow these instructions may result in electric shock, fire and death.

⚠ WARNING ELECTRICAL SHOCK HAZARD

ⓘ WARNING: To avoid a hazard due to instability of the appliance, it must be fixed in accordance with the instructions.

ⓘ This appliance is not intended for use by persons (including children) with reduced physical, sensory or mental capabilities, or lack of experience and knowledge, unless they have been given supervision or instruction concerning use of the appliance by a person responsible for their safety. Children should be supervised to ensure that they do not play with the appliance.

ⓘ If the supply cord is damaged, it must be replaced by the manufacturer, its service agent or similarly qualified persons in order to avoid a hazard.

ⓘ WARNING: Do not use electrical appliances inside the food storage compartments of the appliance, unless they are of the type recommended by the manufacturer.

ⓘ WARNING: Do not damage the refrigerant circuit. For appliances which use flammable insulation blowing gases, the instructions shall include information regarding disposal of the appliance. Only the service agent or similarly qualified persons can disposal flammable insulation blowing gases of appliance.

ⓘ Never store or use the gasoline or other flammable substances in the immediate area of the refrigerator to avoid fires.

ⓘ Never place flammable and explosive substances and highly corrosive acid etc. in the refrigerator.

ⓘ Prevent water ingress
Never sprinkle or flush the refrigerator using water, nor place the refrigerator in an area exposed to moisture or water sprinkling, let alone filling the refrigerator with water, so as to avoid impairment of the electric insulativity of the refrigerator. Furthermore, failing to follow such requirements may lead to electric shock and fire, or other accidents.

⃠ Never modify the refrigerator without approval
It is not allowed to remove or modify the refrigerator without approval, nor to cause man-made damages of the refrigerating circuit.
The refrigerator must be repaired by the competent professional.

ⓘ Do not store liquid bottled food in freezer chamber. The cans and the bottles may explode.

ⓘ Do not put frozen products, taken out directly from the freezer (ice cubes, etc.) into your mouth, their low temperature may cause severe frostbite.

ⓘ If the refrigerating appliance is left empty for long periods, switch off, clean, dry, and leave the door open to prevent mould developing within the appliance.

ⓘ Only allow service personnel to carry out the maintenance of the refrigerator. Power should always be disconnected before any service is coming.

ⓘ To avoid contamination of food, please follow the instructions below.
Opening the door for long periods can cause a significant increase of the temperature in the compartments of the appliance.
Clean regularly surfaces that can come in contact with food and accessible drainage systems.
Store raw meat and fish in suitable containers in the refrigerator, so that it is not in contact with or drip onto other food.

REFRIGERANT

ⓘ The refrigerant isobutane (R600a) is contained within the refrigerant circuit of the appliance, a natural gas with a high level of environmental compatibility, which is nevertheless flammable. During transportation and installation of the appliance, ensure that none of the components of the refrigerant circuit becomes damaged.

The refrigerant (R600a) is flammable.

Warning: RISK OF FIRE/FLAMMABLE MATERIALS

If the refrigerant circuit should be damaged:

ⓘ Avoid open flames and sources of ignition.

ⓘ Thoroughly ventilate the room in which the appliance is situated.

OPERATING YOUR REFRIGERATOR

The temperature within the fridge and freezer compartments is controlled by the thermostat situated inside of the fridge area. When you first start the fridge we suggest that you turn the thermostat to a maximum setting (7) until desired refrigeration temperatures are achieved. After a few hours turn it down according to the following chart to reach the recommended operating temperature setting. Then put food into the refrigerator.

1. LED light

2. Temperature control dial

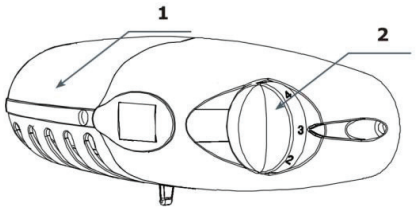

Normal Operating Temperature		
THERMOSTAT SETTING	FRIDGE TEMP	FREEZER TEMP
OFF/o position	OFF	OFF
Setting 1~3	›7°C / 45°F	›-12°C / 10.4°F
Setting 4~5	4°C~7°C / 39°F~45°F	-12°C~-15°C / 10.4°F~-5°F
Setting 6~7	‹4°C / 39°F	‹-15°C~-20°C / 5°F~-4°F

Note 1: The above chart is a guideline based on ideal ambient conditions of 25°C~32°C / 77°F~90°F, several factors can alter the performance.

Note 2: The normal operating temperature for this appliance is 16°C~43°C / 61°F~109°F. If the ambient temperature is lower than 16°C / 61°F, the dial may need to be turned toward max to keep the freezer temperature.

ROUTINE MAINTENANCE AND CARE INSTRUCTIONS

The refrigerator has been equipped with an automatic defrosting function (no-frost). Water from defrosting will go to water tray and be evaporated.

1. To develop the best performance of this machine and prolong its service life, it shall be serviced frequently. Before maintenance, it shall be confirmed that the power supply has been disconnected.
2. The refrigerator inside shall be thoroughly cleaned every year. To clean the refrigerator, the power shall be turned off and the refrigerator shall be emptied. Then the refrigerator inside shall be cleaned using the wet soft cloth or sponge dipped with clean water or mild detergent. It is not allowed to clean the refrigerator using organic solvent, alkaline detergent, boiled water, washing powder or acid and the like.
3. In humid environments or in rainy weather, the refrigerator surface may have condensation. This is caused due to the contact with the moisture in the air. In such a case, the surface can be dried using a dry cloth.
4. To ensure the normal operation of the refrigerator for a long period of time, the user should inspect the refrigerator on a regular basis; if any abnormality is found, the manufacturer shall be notified of the same immediately.
5. During cleaning operation, it is not allowed to use water to flush the compressor compartment of the refrigerator. After cleaning operation, the refrigerator shall be wiped using a dry cloth to prevent rusting.
6. Please be sure to keep the door gasket (seal) clean to keep the unit running efficiently.

Taking out the shelf:

The refrigerator shelves are fixed in the compartments from the factory. Taking out shelves are possible by removing the screws using a Phillips screwdriver.

Taking out and putting in the crisper:

Tilt the front part and pull it out, then slide it in as much as possible until it is stopped.

Taking out and putting in the door rack:

Lift the door rack, remove it and put it back from the top into its required position.

Checking after cleaning:

- If any accessories are fixed properly
- If any of above happened, please check and contact your local retailer or service.

STORAGE OF FOOD IN THE REFRIGERATOR

1. Before storing food in your refrigerator, please make sure your food, especially food with water in plastic bags have proper sealing or put in containers with proper sealing to avoid unexpected odor or drying.
2. Hot or warm food shall be put into the refrigerator after cooling for energy saving purpose.
3. Please leave adequate space between food for better air circulation in the refrigerator.
4. Better to store food in small sizes.
5. Please store fruit and vegetable after cleaning in proper wrapping or in properly sealed containers.
6. Please store fruit and vegetable in the crisper drawer.
7. The storage time for frozen products depends on their quality before freezing when fresh, and on the storage temperature. Products beef, pork, fish and poultry are recommended about 3 months in the freezer compartment when the temperature of -15 °C or lower is maintained.
8. Fridge mode is for all delicate and perishable food e.g.:
   -Pre-packed vegetable and other fresh food with a label stating it should be kept at a temperature of approx. 5°C.
   - Fresh dough, cake mixtures.
   - Dishes or baked goods containing eggs or cream.
   - Sausage products, ready meals
   - butter and cheese

   Not all food is suitable for storing in the refrigerator, particularly: -
   Fruit and vegetables which are sensitive to cold, such as bananas, avocado, papaya, passion fruit, aubergines, peppers, tomatoes and cucumbers.
   - Fruit which is not yet ripe
   - Potatoes

ⓘ This refrigerator is for food use which could not store any object with strict temperature requirement, such as medicine, blood, vaccine or academic stuff, etc.

REFRIGERATOR PARTS & USAGE

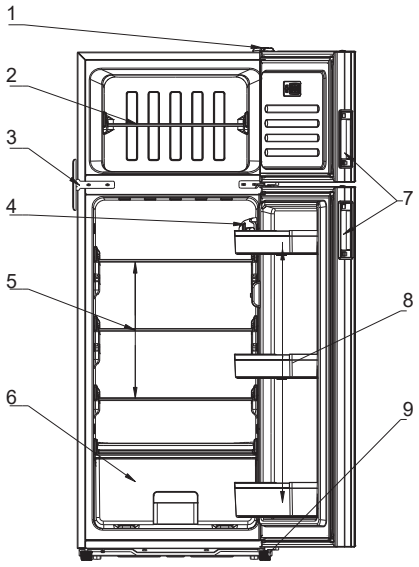

1.	Top hinge
2.	Freezer shelf
3.	Door latch bracket
4.	Thermostat
5.	Refrigerator shelf
6.	Crisper
7.	Door handle and lock latch
8.	Door rack
9.	Adjustable bottom feet

Note: Before using, please remove the foam and tape which is used for fixing drawers, glass shelves and other parts during shipping. Drawers and shelves are easily to be damaged. Please use them properly.

PACKING LIST

Description	BLK: RHH: 140-2712, LHH: 140-2742 STAINLESS: RHH: 140-4712, LHH: 140-4742
Refrigerator Shelf	4
Door Rack	3
Crisper	1
Freezer Shelf	1
User's Manual	1

TECHNICAL SPECS

Model	BLK: 140-2712 140-2742	SS: 140-4712 140-4742
Rated Voltage	DC 12V	
Rated Current	12A	
MCA	15A	
MOP	27A	
Volume	7.51cu.ft (213L)	
Freezer Volume	1.60cu.ft (45L)	
Fridge Volume	5.91cu.ft (163L)	
Defrost Power	DC 12V, 120W	
Refrigerant Type / Charging	R600a / 45g	
Insulation Blowing Gas	Cyclopentane	
Dimensions (W*D*H)	555*580*1410	

PRECAUTIONS FOR INSTALLATION

⚠ After transit where the refrigerator has been on its side or back, ensure that the refrigerator is in a level, upright position for 2 hours before connecting the appliance to a power source; this will reduce the possibility of a malfunction in the cooling system.

⚠ Set the refrigerator vertically. The refrigerator shall not be tilted over 45 when being handled.

ⓘ Take the product out of the package; remove the scotch tape protecting the door and the equipment. Any remaining adhesive stains may be removed with a mild soap + water.

ⓘ The refrigerator must be placed on a flat, firm and stable ground surface. If it needs to be elevated, a stable, solid and non-flammable pad shall be used. Never use the packaging foam as the pad to elevate the refrigerator.

ⓘ 1. Adjust the feet so the appliance sets vertically.
2. Tilt the top backwards a little by turning the feet 1 ~2 turns further. This will allow the drawer door to close and seal properly.

ⓘ Do not place the refrigerator in the area exposed to moisture or water splash. The water splash or dirt on the refrigerator could cause rusting and issues of electrical connections.

⃠ For best and most efficient operation, the refrigerator should operate within 61°F -109°F (16°C - 43°C). The refrigerator shall be kept far away from the heat source such as fireplaces, furnaces, etc. Ensure a thermal barrier, such as wood paneling isolates the refrigerator spaces as not to hinder performance of the refrigerator.

If the ambient temperature is higher than 109°F (52 °C), allow the inside of the coach to cool down before turning on.

If the ambient temperature is lower than 61°F (16°C), the temperature setting may need to be set towards max to operate the refrigerator.

POWER SUPPLY REQUIREMENT

ⓘ This refrigerator must be connected to a stable and regulated 12 V DC power supply only and must be supplied at safety extra-low voltage circuit. The circuit must be protected properly between the appliance and power supply main, 15A min, 20A max is acceptable. Do not use auto resetting or minibreaker type circuit protection.

ⓘ The wire connection shall be chosen according to current recommendations.

Wire your refrigerator directly to your power supply. You will need the correct sized wire depending on the distance from your power supply to the refrigerator. If your wiring is insufficient, your refrigerator may not perform correctly or may be damaged.

Wire Size	Max Length (Feet)
14AWG	5ft
12AWG	10ft
10AWG	15ft
8AWG	23ft
6AWG	38ft
Remarks	For maximum battery performance ensure the voltage drop between each power source (battery & converter) and t he refrigerator does not exceed 0.4V
Note: Only authorized or qualified professionals should perform repair services for this appliance.	

ELECTRICAL CONNECTION

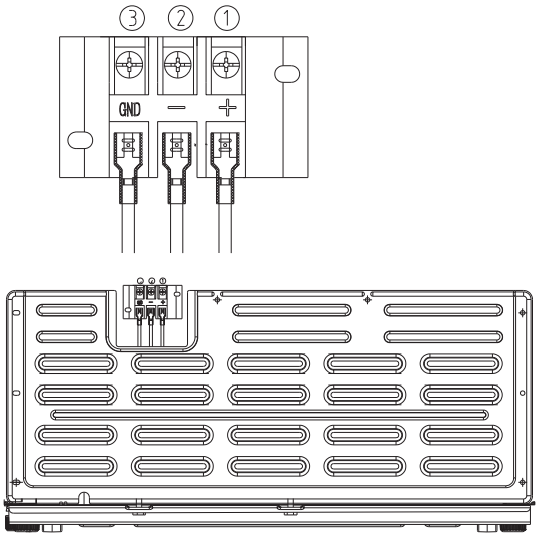

1. Connect the red"+" terminal ① with Positive pole of 12V DC.
2. Connect the black "-" terminal ② with Negative pole of 12V DC.
3. If the appliance is installed in an RV, the green GND terminal ③ should be connected directly to the RV chassis.

Note: all connections must be reliable.

REFRIGERATOR CABINET

1. Ventilation condition
   The position you select for the refrigerator installation should be well-ventilated with minimal hot air.

2. Heat dissipation space
   During operation, the unit gives off heat to surroundings. Ensure that there is adequate space between the refrigerator and neighboring walls or large objects. A minimum space of 25.4mm (1.0”) is highly recommended on the top, both sides and at the back of the refrigerator.

ⓘ The rear wall of the refrigerator, in particular, the electrical parts and the elements of the cooling system must not contact other elements, which may damage them.

Appliance Dimensions suggested below:

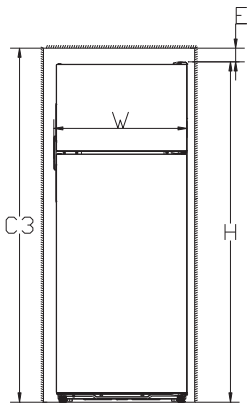

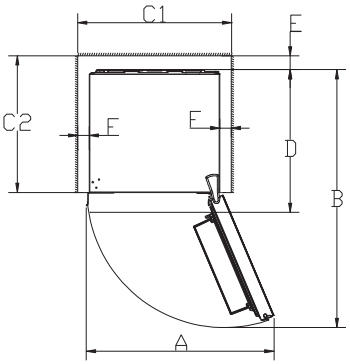

W	D	H	A	B	E	F
555mm	580mm	1410mm	778mm	1080mm	Minimum	Minimum
21.9”	22.8”	55.5”	30.6”	42.5”	25.4mm (1.0”)	25.4mm (1.0”)

Cavity dimensions recommended below:

C1	C2	C3
Minimum 591mm (23.3”)	Minimum 535mm (21.1”)	Minimum 1425mm (56.1”)

3. Affixing the refrigerator to the cabinetry
   The refrigerator can be affixed to the RV cabinetry by installing the screws provided, or a similar Pan Head type where the shank connects into the backer support by 25mm (1 “). Screw into the holes on the inner compartment, as shown:
   Then place the caps into the holes.

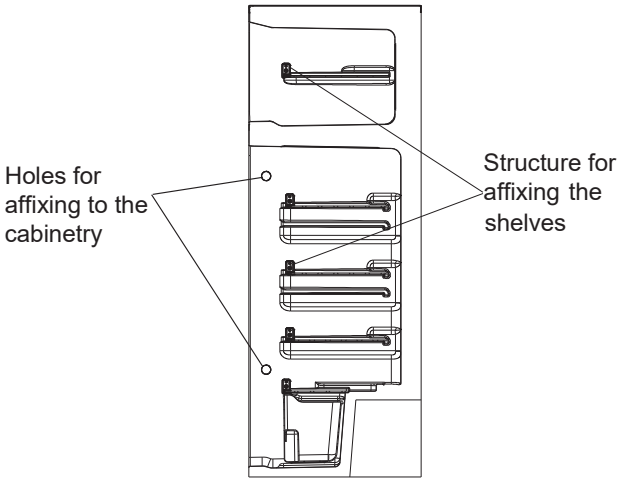

4. Affixing the shelves in the refrigerator and freezer compartments
   The glass shelves in the refrigerator compartment are affixed in production for safety considerations.

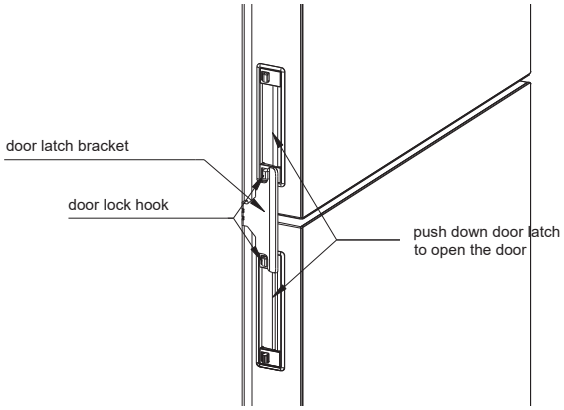

5. Door lock function
   The door should be locked during use. When you close the doors, please check the lock hooks a re pushed into the latch bracket on the cabinet as shown below. To open the doors, you push down the door latch and pull to get the hook out of the bracket.

PRECAUTIONS FOR OPERATION

1. Make sure the accessory parts inside the refrigerator are present and the inside is wiped with a soft cloth.

2. Connect the refrigerator to the dedicated power supply battery in the RV, then the compressor will start working. In an hour or two, open the freezer door, if the compartment internal temperature drops significantly, it indicates the refrigeration system is working normally.

3. After the refrigerator runs for a period of time, the internal temperature will be automatically controlled according to the user’s temperature setting. After the refrigerator is fully cooled, load food inside.

4. Do not switch off the power supply of the refrigerator when unnecessary, because the power interruption may cause temperature rise inside the refrigerator, thus to shorten the storage term of food.

5. A certain space shall be maintained between food containers, which will facilitate the circulation of cool air.

   Energy saving tips:
   • Let food cool down before adding to the refrigerator. Put frozen food in the refrigerator compartment to thaw.
   • Be sure to wrap food properly and wipe container dry before placing them in the refrigerator. This cuts down on frost buildup inside the refrigerator.
   •Organize and label food to reduce door openings.

TROUBLESHOOTING

If you find any abnormality during operation, immediately stop the operation, turn off the power, and check the machine according to the following instructions. If necessary, contact the after-sales service center.

Status	Reason and Solution	
The refrigerator doesn’t work	The power supply is not switched on	Switch on the power supply
	The compressor is provided with a protection mode	The operation interval of the compressor is 5 minutes.
	The control board is damaged	Notify the manufacturer for repair

Noise too high	The refrigerator is not level	Level the refrigerator, for the unleveled refrigerator may produce noise during operation
	The refrigerator is touching furniture and I or other objects	Place the appliance at a location that ensures proper clearances around it
Heat dissipation	There is anti-condensate tube on the front frame which will send out heat during refrigerator operation.	It is a normal phenomenon.
	There is heat dissipation (condenser) on the cabinet which may cause heat.	It is a normal phenomenon.
Moisture forms on outside of refrigerator	The door is opened too frequently or the door is opened for too long time	Do not open the door for too long time, nor open or close the door too frequently
	The external environment is highly humid	Dry using a piece of dry and soft cloth
	The refrigerator temperature is set too low	Set a proper temperature
The illumination lamp is not lit	The illumination lamp is damaged	Notify the manufacturer for a replacement lamp
	Check whether the power supply is switched on	Check the power supply
The door is not improperly sealed and there is a leakage of cool air	The door seal may be hardened or deformed	Use the hot air of the hair dryer to bake the deformed surface or use the hot towel to cover the deformed surface, and close door and press it tightly after the door seal is softened.
The compressor keeps operating for long time	If the temperature in the summer is too high, the compressor will work for long time. This is normal.	
	If the refrigerator is not cool enough, please check against the following items: If the refrigerator door is not properly sealed or the door is opened too frequently, close the door tightly, and open the door at a lower frequency. Do not place too many foods in the refrigerator, and maintain a certain space between foods.	
	If the temperature inside the refrigerator reaches too low required temperature, check the temperature setup, and set the temperature at a higher level.	
The refrigerating effect of the refrigerator is poor	The refrigerator is exposed to sunshine or any heat source is located in its immediate area.	
	Temperature control is not set correctly.	
	A large amount of warm or hot food was stored recently. Wait for the refrigerator to reach its selected temperature.	
	The bottles in the fridge are crowded to impair the cool air circulation.	
	The refrigerator door is frequently opened or is not properly closed.	
Food is frozen in fridge mode	Is food placed too close to sensor	
	Is food placed too close to air outlet?	
There is any odor in the refrigerator	The new refrigerator may give off the smell of the foaming agent or plastic. That's normal, and such smell will disappear slowly in future.	
	Check whether there is any spoiled food inside the refrigerator.	
	Any odorant food shall be tightly sealed using the plastic bag.	
	The refrigerator shall be cleaned on a regular basis.	
The refrigerator produces the liquid flowing sound.	The sound is generated from the flowing of the refrigerant inside the circulating pipeline of the refrigerating system. That's normal. No further treatment is required.	
The refrigerator produces abnormal sound	This is the sound generated in the startup of electric components, such as the relay and thermal protector, during start or stop of the refrigerator.	
	This is caused by the mutual fine movements of various kinds of materials due to the inconsistent thermal expansion and contraction arising out of abrupt changes of the refrigerator inside temperature when the refrigerator is being started or stopped.	
	Bubbling or gurgling sounds (like boiling water).This is the normal sound of refrigerant (used to cool refrigerator) circulating throughout the system.	

STORAGE

If it is not used for a long time, turn off the refrigerator, remove the power supply.
Do a good job in cleaning and open the cabinet door so that no smell will be produced.

ENVIRONMENT IMPACT STATEMENT

Protect the environment and avoid any pollution. This product may cause environment impacts during the operation.
Please pay attention to the following:
The carton, plastics and other recyclable wastes must be put into the classified waste bin as designated. The improper disposal of old batteries and other hazardous wastes may cause serious environmental pollution; therefore, they must be stored in the waste recycling bin.

WASTE DISPOSAL WARNING

Packing materials are used to protect the electric appliance during transportation, and every part of the material is recycled material.
- Paper board/cardboard (made of waste paper)
- Polystyrene blocks (foam, non-fluorinated polystyrene)
- Plastic film, bag (polystyrene)
- Packing tape (polystyrene)
- Do not let children play with packaging material, because the plastic film may cause suffocation!
- Send the packing materials to the public environmental recycling station.

The outdated refrigerator in residential areas where garbage is not classified still has many valuable raw materials which shall be dealt with.
The outdated refrigerator shall be discarded immediately; and the soft power cable shall be removed. Destroy the lock to prevent children from locking themselves when they play.
- Before sending the outdated refrigerator to the public recycling station, the cold circulation system shall not be damaged to ensure the refrigerant and oil of the refrigerator will not leak.
- Information about recycling dates and recycling stations can be consulted with local sanitation departments or government agencies.

Correct Disposal of this product	
	This symbol on the product, or in its packaging, indicates that this product may not be treated as household waste. Instead, it should be taken to the appropriate waste collection point for the recycling of electrical and electronic equipment. By ensuring this product is disposed of correctly, you will help prevent potential negative consequences for the environment and human health, which could otherwise be caused by the inappropriate waste handling of this product. For more detailed information about the recycling of this product, please contact your local council, your household waste disposal service, or the shop where you purchased the product.

ONE YEAR LIMITED WARRANTY

Please read and retain this warranty. Invision does not require Warranty Registration for this appliance.



Your InVision appliance is covered by a one-year limited warranty. For one year from your original date of purchase of the original purchaser, InVision will pay costs for repairing or replacing any parts of this appliance that prove to be defective in materials or workmanship when such appliance is installed, using and maintained in accordance with the provided instructions.

EXCLUSIONS

This Warranty Does Not Cover the Following:

1. Products on which original serial numbers have been removed, altered or cannot be readily determined.
2. Product that has been transferred from its original owner to another party or removed outside that USA or Canada.
3. Rust on the interior or exterior of the unit.
4. Products purchased secondhand.
5. Products used commercially.
6. Service calls which do not involve malfunction or defects in materials or workmanship, or for appliances not in ordinary household use or used other than in accordance with the provided instructions
7. Service calls to correct the installation of your appliance or to instruct you how to use your appliance.
8. Expenses for making the appliance accessible for servicing, such as removal of trim, cupboards, shelves, etc., which are not a part of the appliance when it is shipped from the factory.
9. Service calls to repair knobs, buttons, handles, or other cosmetic parts
10. Surcharges including, but not limited to, any after hour, weekend, or holiday service calls, tolls, ferry trip charges, or mileage expense for services calls to remote areas, including the state of Alaska.
11. Damage to the finish of appliance, RV, or home incurred during installation, including but not limited to floors, cabinets, walls, etc.
12. Damage caused by services performed by unauthorized service companies, use of parts other than genuine InVision parts or parts obtained from persons other than authorized service companies, or external causes such as abuse, misuse, inadequate power supply, accidents, fires, or acts of God.

The customer's sole or exclusive remedy under this limited warranty shall be product or repair or replacement as provided herein. Claims based on implied warranties, including warranties of merchantability or fitness for particular purpose, are limited to one year or the shortest period allowed by law, but not less than one year. InVision shall not be liable for consequential or incidental damages such as property damage and incidental expenses resulting from any breach of this written limited warranty or any implied warranties, so these limitations or exclusions may not apply to you. This written warranty gives you specific legal rights. You may also have other rights that vary from state to state.

Keep your receipt to establish the warranty period should service be required. If service is performed, please obtain and keep all receipts. Product features or specifications as described or illustrated are subject to change without notice

IF YOU HAVE A PRODUCT PROBLEM:

1. If warranty service is required, return product to your dealer and/or retailer for refund or replacement; or
2. contact Invision, an Airxcel brand, Customer Service Department at 574-247-9235.

Be sure to have the model and serial number (located on the appliance rating plate, proof of purchase and the nature of the problem readily available.

FOR FUTURE REFERENCE, YOU SHOULD RECORD THE FOLLOWING INFORMATION:	
MODEL NUMBER:	
SERIAL NUMBER:	
STOCK NUMBER:	
DATE OF PURCHASE:	

InVision

2525 John Weaver Pkwy, Elkhart, IN 46514
customerservice.invision@airxcel.com | 574.247.9235