BUSH

Instruction manual

M50142FFW
M50142FFB



You'll soon be enjoying your new refrigerator.

It all begins here, with your instructions. Don't worry, there's nothing too technical coming up. Just simple, step-by-step guidance to get you up and running quickly. Sound good? Then let's get started.

Help and Guidance

We're here to help you get the most from your refrigerator. Should you require any guidance, a simple solution can often be found online at:

www.argos-support.co.uk

If you still require further assistance, call one of our experts on **0345 257 7271.**

If you require any technical guidance or find that your product is not operating as intended, a simple solution can often be found in the **Troubleshooting** section of these instructions,

Contents

1 Safety information

Safety information 6

2 Getting to know your refrigerator

Ready? Let's begin 13

Parts 14

3 Installing your refrigerator

Transportation 17

Installation 17

Tools 18

Door Reverse 19

Electrical Connection 23

4 Using your refrigerator

Before first use 26

Using your appliance 26

Useful information 26

5 Care and Maintenance

Cleaning 30

Light bulb replacement 30

Power failure 30

Moving your appliance 30

Technical specifications 31

6 Product support

Troubleshooting 34

Help and assistance 35

Guarantee 36

Icon	Type	Meaning
	WARNING	Serious injury or death risk
	RISK OF ELECTRIC SHOCK	Dangerous voltage risk
	FIRE	Warning; Risk of fire / flammable materials
	CAUTION	Injury or property damage risk
	IMPORTANT	Operating the system correctly

1 Safety information

Safety information

Important - Please read these instructions fully before installing or operating

Before use

The installation of this appliance is best carried out by 2 people.

- Dispose of all packaging carefully and responsibly.
- The appliance is designed for **indoor use only** and must be protected from rain, moisture and extreme temperature variations.
- This appliance is designed for house hold use. **Do not** use the appliance for industrial and commercial use, or any other purpose.
- The appliance **MUST** be positioned on a firm level base.
- **Do not** splash water on the appliance. It may cause electrical parts to fail and result in an electric shock.
- Leave the appliance in its intended place of installation and in its correct orientation for at least 4 hours before switching on to allow the cooling system to settle before first use or after any transportation.
- Your appliance is an environmental friendly product and it contains non CFC/HFC gas substances in the cooling system (Called R600a) and in the insulation (Called cyclopentane) which are potentially flammable if exposed to fire. Therefore, take care not to damage, the cooling circuit/pipes of the appliance in transportation and in use. In case of damage do not expose the appliance to fire,

If you require any technical guidance or find that your product is not operating as intended, a simple solution can often be found in the **Troubleshooting** section of these instructions,

potential ignition source and immediately ventilate the room where the appliance is situated.

- **Do not** sit, stand or place any other heavy objects on top of the appliance. This could result in injury or damage to the appliance.
- **Do not** allow children to play with the appliance to avoid the risk of entrapment and suffocation.
- Keep ventilation opening, in the appliance enclosure or in the built-in structure, clear of obstruction.
- During use this appliance is not intended for use by persons (including children) with reduced physical, sensory or mental capabilities, or lack of experience and knowledge, unless they have been given supervision or instruction concerning use of the appliance by a person responsible for their safety. Children should be supervised to ensure that they do not play with the appliance.
- This appliance is not intended for use by young children or infirm persons unless they have been adequately supervised by a responsible person to ensure that they can use the appliance safely. Young children should be supervised to ensure that they do not play with the appliance.
- **Do not** use mechanical,

electrical or chemical way to speed up the defrost process not recommended by the manufacturer.

- **Do not** use or place other electrical products inside the appliance not recommended by the manufacturer.
- **Do not** store liquids in glass containers in the freezer compartment as these may shatter.
- **Do not** store flammable materials such as alcohol, gasoline, LP gas or glue etc in the appliance.
- In case there is an inflammable gas leaking, open the window for air circulation and do not pull out the plug or turn the temperature knob. **Do not** touch the appliance until the valve of gas is turned off. Otherwise, sparks may happen.
- This appliance can be used by children aged from 8 years and above and persons with reduced physical, sensory or mental capabilities or lack of experience and knowledge if they have been given supervision or instruction concerning use of the appliance in a safe way and understand the hazards involved. Children shall not play with the appliance. Cleaning and user maintenance shall not be made by children without supervision.
- **Do not** attempt to repair the appliance yourself. Contact the Customer Helpline:0345 257 7271.

Safety information

Important - Please read these instructions fully before installing or operating

Before use



Warning: risk of fire

- **When** positioning the appliance, ensure the supply cord is not trapped or damaged.
- **Do not** locate multiple portable socket-outlets or portable power supplies at the rear of the appliance.
- **Children** aged from 3 to 8 years are allowed to load and unload refrigerating appliances.
- **To** avoid contamination of food, pay attention to the following:
  -opening the door for long periods can cause a significant increase of the temperature in the compartments of the appliance;
  -clean regularly surfaces that can come in contact with food and accessible drainage systems;
  -clean water tanks if they have not been used for 48 hours; flush the water system connected to a water supply if water has not been drawn for 5 days;
  -store raw meat and fish in suitable containers in the refrigerator so that it is not in contact with or drip onto other food;
  -two-star frozen-food compartments are suitable for storing pre-frozen food, storing or making ice-cream and making ice cubes;

-one-, two- and three-star compartments are not suitable for the freezing of fresh food;

-if the refrigerating appliance is left empty for long periods, switch off, defrost, clean, dry and leave the door open to prevent mould developing within the appliance.

- **Do not** attempt to repair the appliance yourself. Contact the Customer Helpline: **0345 257 7271.**

Using your chest freezer
Getting the most from your appliance Storing food

The table below contains general guidelines on the storage of food in the refrigerator.

Refrigerator location	Type of food
Crisper bin (salad bin)	• Foods with natural preservatives, such as jams, juices, drinks, condiments. • Do not store perishable foods.
Fridge door	• Fruits, herbs and vegetables should be placed separately in the crisper bin. • Do not store bananas, onions, potatoes, garlic in the refrigerator.
Fridge shelf – bottom Chiller bin	• Raw meat, poultry, fish (for short-term storage)
Fridge shelf – middle	• Dairy products, eggs
Fridge shelf – top	• Foods that do not need cooking, such as ready-to-eat foods, deli meats, leftovers.
Freezer drawer/shelf	• Foods for long-term storage. • Bottom drawer/shelf for raw meat, poultry, fish. • Middle drawer/shelf for frozen vegetables, chips. • Top drawer/shelf for ice cream, frozen fruit, frozen baked goods.

Getting to know your refrigerator 2

Getting to know your refrigerator

You'll be up and running in no time

Ready? Let's begin...

Please read these instructions carefully. They contain important information which will help you get the best from your refrigerator and ensure safe and correct installation and operation.

If you require any further assistance, our technical experts are happy to help. For full details, refer to the product support section at the end of these instructions.

Getting to know your refrigerator

You'll be up and running in no time

Parts

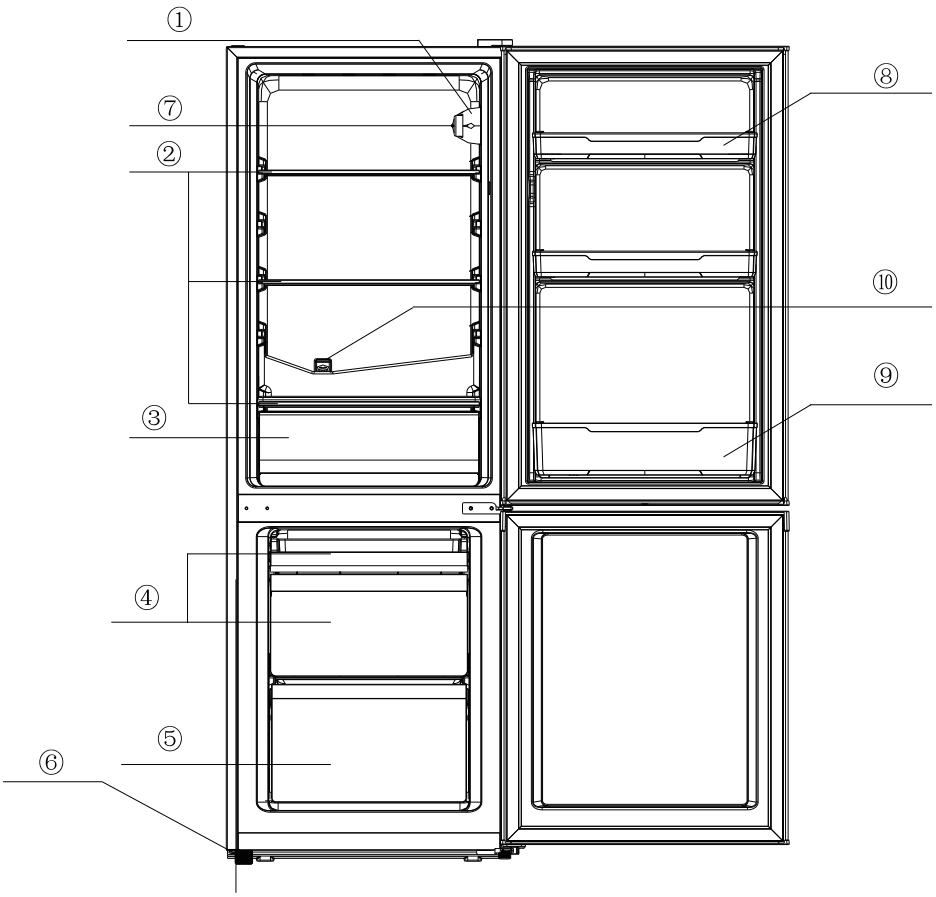

1、LED Lamp
2、Glass shelf
3、Crisper
4、Drawer
5、Flip cover
6、Adjustable foot
7、Thermostat
8、Door Shelves
9、Bottle shelves
10、Drain port

Accessories included



Instruction x 1

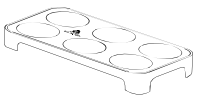

Egg tray x 1

If you require any technical guidance or find that your product is not operating as intended, a simple solution can often be found in the **Troubleshooting** section of these instructions,

Installing your refrigerator

3

Installing your refrigerator

Bringing it all together

Transportation

Caution: 2 people are required to unpack and handle the appliance, it is recommended that gloves are worn.

- The appliance should be transported only in an upright position. Do not tilt the appliance greater than 45 degrees . The packaging as supplied must be intact during transportation.
- After transporting the appliance, leave it for at least 4 hours before switching on to allow the cooling system to settle. Failure to comply could result in damage to the appliance.
- Do not move the appliance by pulling the door or handle as it may damage your flooring and wall coverings etc.
- Empty any water in the drain tray before moving.
- Make sure that the defrost water pipe at the back of the product is fixed to the plastic evaporating pan on the top of the compressor, to avoid defrost water spillage on the on the floor.
- Ensure the supply cable is not caught under the appliance during and after moving.
- Carefully remove all packaging materials including the foam base, dispose of correctly

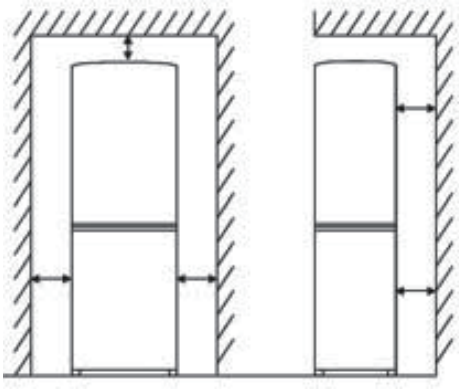

Installation

- Ensure sufficient spacing is provided for the appliance to be installed. Leave space on both sides (10cm), back (10cm) and above the appliance (30cm) to ensure proper ventilation.
- Do not place the appliance near a heat source or in direct sunlight.
- Do not put any heavy objects on top of the appliance. It will damage the appliance.
- Do not install the appliance in a moist and wet place.
- Adjust the feet at front to level the appliance. It should be installed on a smooth surface to avoid excessive vibration and noise.
- Each appliance has a climate class (shown on the rating plate) where it indicates the temperature range of the appliance operation in place. The appliance may not work properly if it is left for a long period at a temperature outside the specified range.



Climate Class	Amb.T.(°C)	Amb.T.(°F)
SN	10~32°C	50~90°F
N	16~32°C	51~90°F
ST	16~38°C	61~100°F
T	16~43°C	61~110°F

Installing your refrigerator

Bringing it all together

Tools

Warning: Remove the main plug before reversing the door. 2 people may be required for the operation.

List of tools to be provided by the user			
	Cross screwdriver	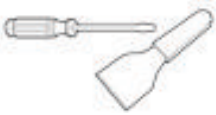	Putty knife thin-blade screwdriver
	5/16” socket and ratchet		Masking tape

If you require any technical guidance or find that your product is not operating as intended, a simple solution can often be found in the **Troubleshooting** section of these instructions,

Installing your refrigerator

Bringing it all together

Door Reverse

1. Remove the hinge cover and the screws from the hinge bracket, take it off and remove the fridge door by lifting it up and away.

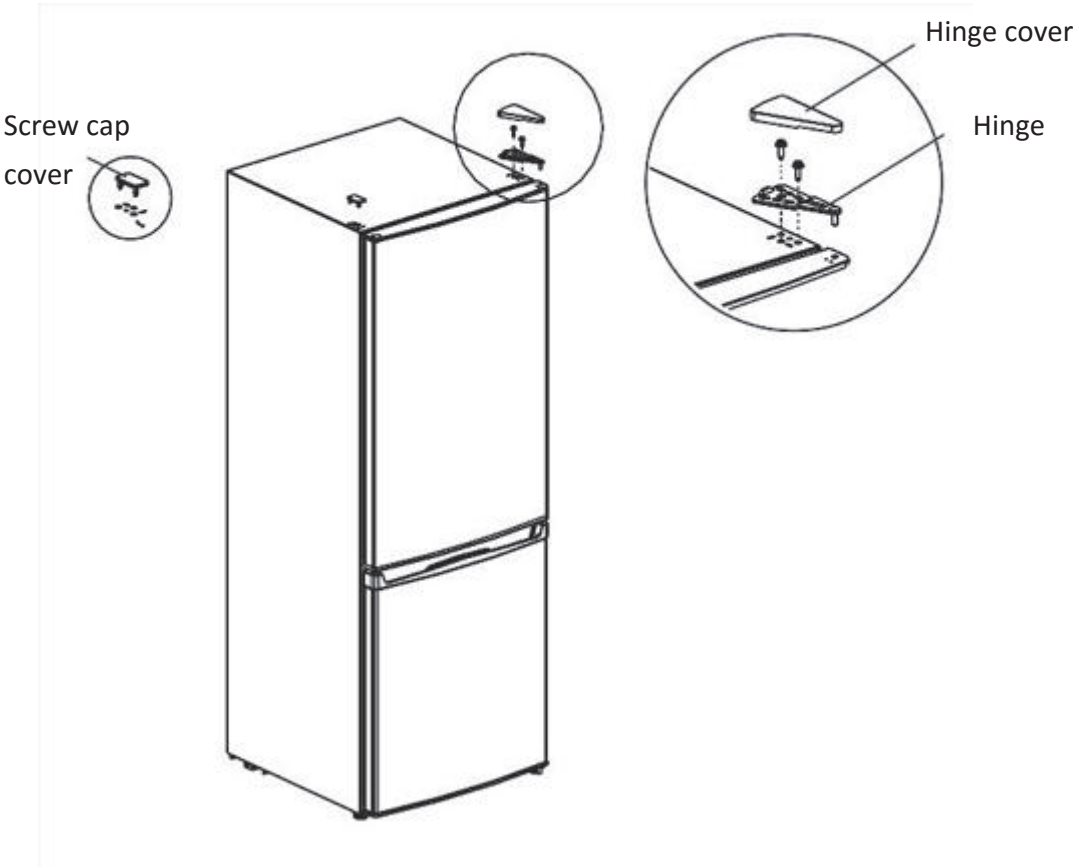

2. Remove the screw cap covers that are on the top left of the unit and fix them on to the opposite side.

Installing your refrigerator

Bringing it all together

Door Reverse

3.Take off the middle hinge by removing the screws. Lift the freezer door up and move it away. Remove the screw cap covers that are on the left of the unit and fix them on to the opposite side.

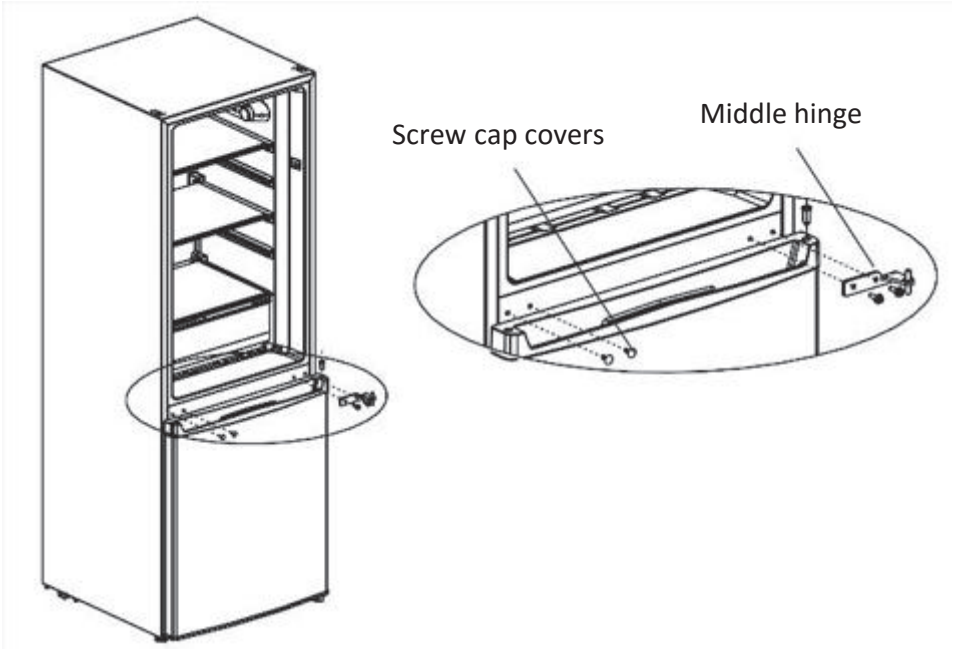

4. Remove the hinge plug from the top of freezer door and fix it to the opposite side. Then remove hinge stopper from the bottom of the freezer door and fix it to the opposite side, ensuring it is fixed securely. Tilt the appliance carefully, no more 45 degrees and remove the adjustable foot. Take off the bottom hinge by removing the screws. Reattach the hinge to the left side of the appliance, reinstall the adjustable feet and place the freezer door back on.

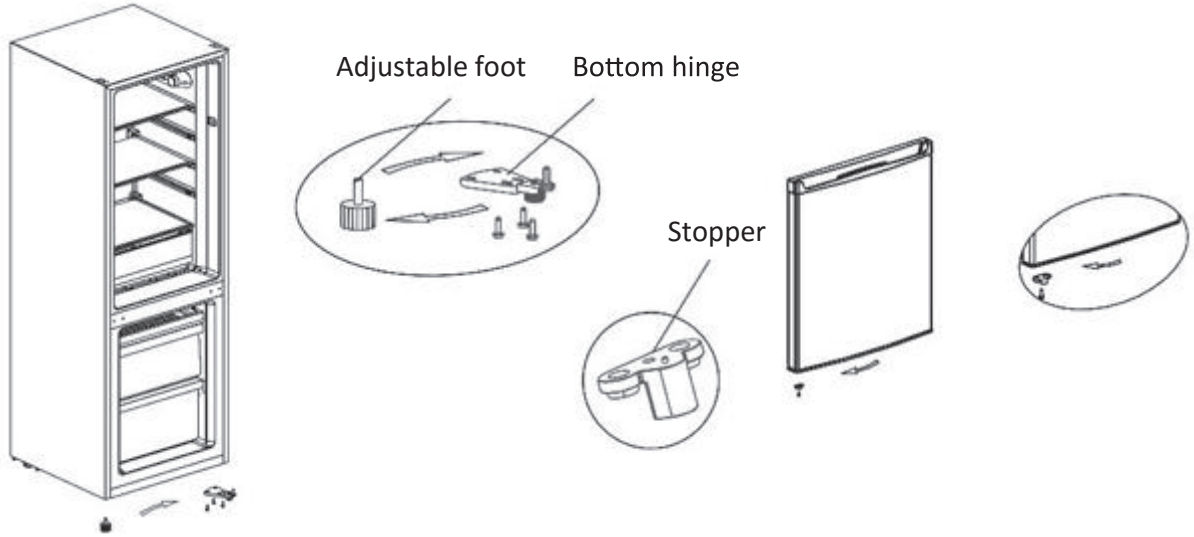

If you require any technical guidance or find that your product is not operating as intended, a simple solution can often be found in the **Troubleshooting** section of these instructions,

Installing your refrigerator

Bringing it all together

Door Reverse

5.Place the freezer door on to the bottom hinge. Flip over the middle hinge (by180) and put the bottom pin of the middle hinge into the top of the freezer door and screw the middle hinge back onto the opposite side the fridge. You must ensure the freezer door is aligned horizontally and vertically, so that the seals are closed on all sides before finally tightening.

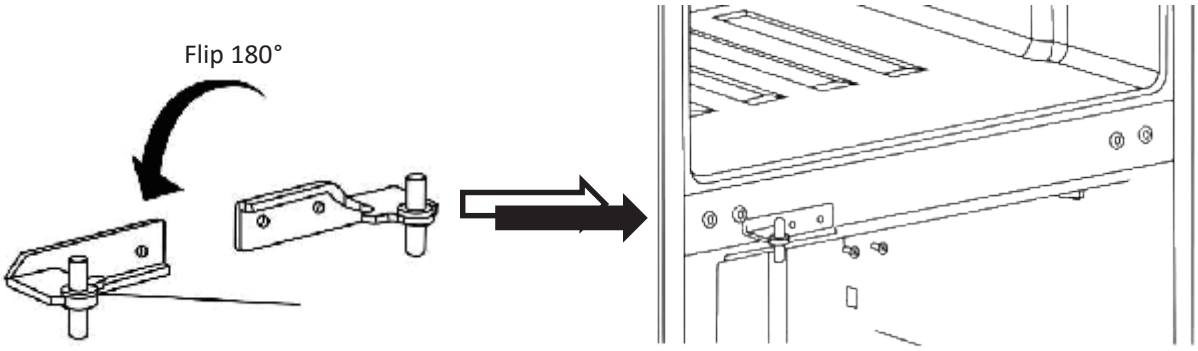

6.Remove the hinge stopper from the bottom of the fridge door and fix the spare hinge stopper that is supplied as an accessory (packaged with the IB) to the opposite side of the fridge door, ensuring it is fixed securely.

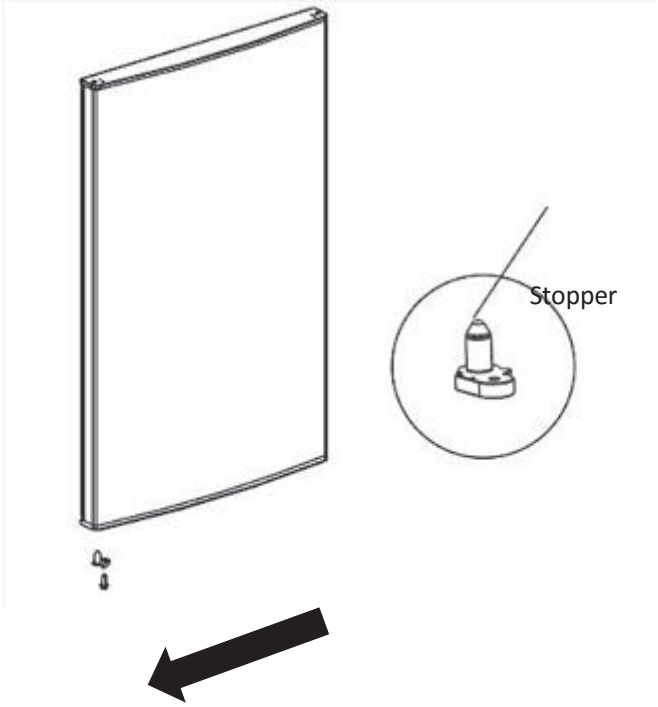

Installing your refrigerator

Bringing it all together

Door Reverse

7.Place the fridge door back on to the middle hinge, put the pin of the top hinge into the top of the door and fix the hinge in to place by screwing it to the top of the fridge (use a spanner to tighten it if necessary. Ensure the fridge door is aligned horizontally and vertically so that the seals are closed on all sides before finally tightening the top hinge.

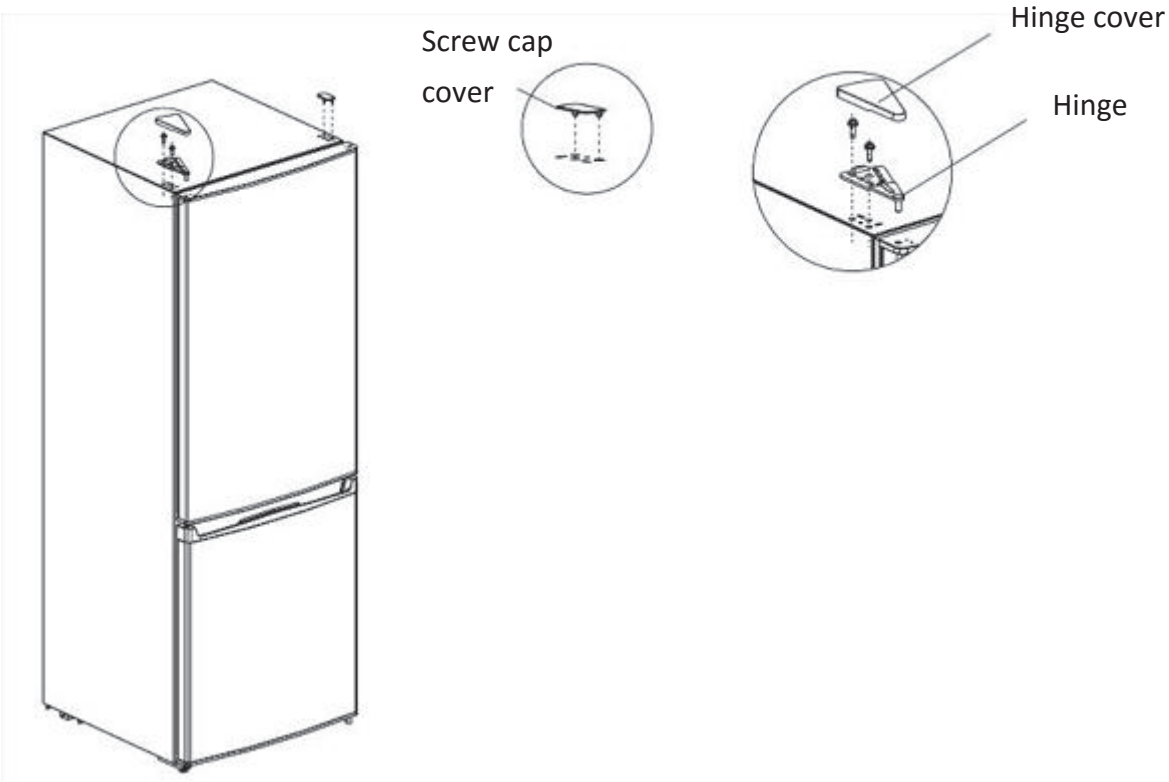

If you require any technical guidance or find that your product is not operating as intended, a simple solution can often be found in the **Troubleshooting** section of these instructions,

Installing your refrigerator

Bringing it all together

Electrical connection

Any electrical work that is required to install this appliance MUST be carried out by a qualified electrician.

Warning: THIS APPLIANCE MUST BE EARTHED

Before making any electrical connections, ensure that:

- Electrical safety is only guaranteed when the earth system of your house is in accordance with the related local regulations.
- Do not damage the refrigerant circuit.
- Do not bend, stretch or pull the supply cable to avoid electric shock.
- Do not use electrical appliances inside the food storage compartments of the appliance, unless they are of the type recommended by the manufacturer.
- Ensure the power socket is suitable for the maximum power of the machine (fuses in the power circuit must be 13 amp).
- The supply voltage should be the same as that indicated in the technical specifications and the appliance rating plate.
- The appliance should be earthed and in compliance with the applicable law.
- When installed, the power socket must be within easy reach.
- If the socket outlets in your home are not suitable for the plug supplied with this unit check with a qualified electrician for replacement.
- The use of adapters, multiple connectors or extension cables are not recommended.
- The appliance must be connected to a 220-240 volt 50Hz AC supply by means of a three pin socket, suitably earthed and protected by a 13 amp fuse.
- Should the fuse need to be replaced, a 13 amp fuse approved to BS1362 must be used.
- The plug contains a removable fuse cover that must be refitted when the fuse is replaced. If the fuse cover is lost or damaged, the plug must not be used until a replacement cover has been fitted or the plug is replaced.
- A damaged plug should be cut off as close to the plug body as possible, the fuse should be removed and the plug disposed of safely.

Plug replacement (UK & Ireland only)

Should you need to replace the plug; the wires in the power cable are coloured in the following way:

Blue Neutral 'N'

Brown Live 'L'

Green & Yellow Earth 'E'

As the colours of the wires in the power cable may not correspond with the coloured markings identifying the terminals in your plug, and proceed as follows:

The green & yellow wire must be connected to the terminal in the plug that is marked with the letter E or by the earth symbol.

The blue wire must be connected to the terminal that is marked with the letter N.

The brown wire must be connected to the terminal that is marked with the letter L.

If the power supply cord is damaged, it must be replaced by the manufacturer or its service agent or a similar qualified person in order to avoid a hazard.

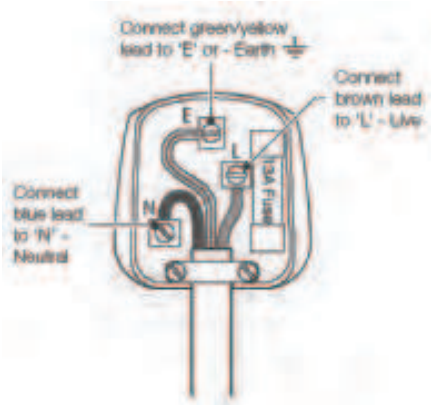

4 Using your refrigerator

Using your refrigerator

Getting the most from your appliance

Before first use

Final checks before operating the appliance

1.Good air circulation around the appliance in position.

2.The feet have been adjusted for perfect levelling.

3.Clean the compartment per recommendation in section “Care and Maintenance”.

4.Plug in the appliance



The compressor starts up and in operation may produce some background noise this is normal, this is not a defect.

Using your appliance

1. Temperature adjustment

- The compartment temperature can be set by the thermostat between “MIN” and “MAX” (coldest setting). We recommend setting the thermostat midway first “MED”.
- To ensure the compartment is maintained at the desired temperature, it is advised to monitor the temperature periodically by a thermometer and adjust the thermostat accordingly.
- Load the appliance after switch on for a while to allow the temperature to reach the desired setting.

2. Storing fresh food

- Use the fridge compartment to store fresh food and drinks.
- Do not exceed the food capacity that the appliance unable to handle.
- Do not put warm food in the appliance immediately as it may cause excessive cooling of the compartment.
- Set the temperature knob at medium position for storing fresh food.
- Do not mix already frozen food and fresh food.

3. Storing frozen food

- The freezer compartment is **** 4 Star rated and suitable for the freezing and storage of pre-frozen food.
- Check the food packaging for **** suggestion before storage.

Useful information

The following guidelines and recommendations are suggested to obtain the best results and storage hygiene.

- Temperature to rise so the door should be closed as soon as possible.
- For hygiene reasons, it is always a good practise to pack, wrap and cover the food before storing.
- Use a polythene bag to store raw meat and place on the lowest shelf. Avoid contact with cooked food to prevent contamination. For safety reason, store raw meat for two to three days only.
- Cooked dishes must be stored in airtight covered containers.
- Food should cool to room temperature.
- Most vegetables should be blanched and chilled before freezing.
- Bottles can be placed in the door section.
- Some fruits and vegetables like pineapples, melons, tomatoes, and cucumbers should be wrapped in polythene bags.
- Do not leave frozen food at room temperature to thaw. You could defrost the food by putting it in the fridge to thaw slowly. Make sure you avoid defrosting food dropping food juices on to other food.

If you require any technical guidance or find that your product is not operating as intended, a simple solution can often be found in the **Troubleshooting** section of these instructions,

Using your refrigerator

Getting the most from your appliance

Energy saving tips

- Place your fridge away from direct sunlight, your oven or any other heat sources. Allow 20 cm clear space on both sides and above, and at least 5 cm behind.
- Cover all food stored, and arrange it so that cold air can circulate freely.
- Higher cold setting will use more energy. Do not set to maximum cold if it is not necessary.
- Cool the hot/warm food to room temperature before put them into your fridge.
- Frequently opening and closing the door will cause the internal temperature to rise and it will consume more energy.
- Close the door(s) properly, and make sure the seals and hinges are airtight. Check the seals by putting a sheet of paper between the door and the main body of the fridge. If the paper moves, your seals need replacing.
- Defrost regularly if your refrigerator is not a frost-free or cyclic defrost model. Accumulated ice layer should not be more than 5 mm thick.
- The pre-set combination of drawers, baskets and shelves have already been set in the most efficient way for the use of this product.

Defrosting

Fridge Compartment

- The fridge compartment defrosts automatically. The defrosting water runs through the drain port to the drain tray at the back of the appliance.



- In case, the some droplets may remain inside the compartment and re-freeze,after the defrosting cycle, this is normal. Do not use pointed or sharp objects, i.e. knives or forks, to remove the
- Check the collection channel to ensure that no food particle have blocked the drain channel.

Freezer Compartment

- The appliance require defrosting once or twice a year when ice layer thickness reaches 5~10mm. Unplug the appliance from the mains before defrosting.
- Remove all frozen food from the freezer and roll it firmly in newspapers. Put it into a container in a cool place for temporary storage.
- Use an ice scraper (not provided) or similar tool to remove the ice layer. This process can be speed up by placing a pot of warm water inside the freezer.
- Empty the defrosting water and clean the freezer.
- Turn on the freezer and set to maximum temperature. Refill the frozen food to freezer.
- This process should be completed within 2 hours.

5 Care and maintenance

Care and maintenance

Looking after your appliance

General

Important: Always unplug the appliance from the power socket during cleaning and maintenance.

- Never use any sharp instruments or abrasive substances, soap, household cleaner, detergent or wax polish for cleaning.
- Use luke warm water to clean the cabinet of the appliance and wipe it dry.
- Never clean the appliance with flammable fluids. It could cause damage and a fire hazard.
- Clean the exterior of the appliance and door seal with a damp cloth and dry it through.
- Avoid water going into the temperature control box. Clean with a dry cloth only.
- Clean the condenser (located at the back of the appliance) with a vacuum cleaner. It is suggested to remove the dust every year.
- Shelves are all removable for cleaning purpose.
- Dusts behind the refrigerator and on the ground shall be timly cleaned to improve the cooling effect and energy saving.
- The interior of the refrigerator should be cleaned regularly to avoid odor.
- Check the door gasket regularly to make sure there are no debris.
- Please turn off the power before cleaning, remove all food, shelves, drawers, etc.
- Clean the door gasket with mild soap and water.
- Use a soft coth or sponge to clean the inside of the refrigerator,with two tablespoons of baking soda and a quart of warm water. Then rinse with water and wipe clean, and open the door and dry it naturally before the power is turned on.
- For areas that are difficult to clean in the refrigerator (such as narrow sandwiches, gaps or corners),it is recommended to wipe them regularly with a soft rag soft bush,etc. and when necessary, combined with some auxiliary tools (such as thin sticks) to ensure no contaminant accumulation in thse areas.
- Do not use soap, detergent, scrub powder, spray cleaner, etc., as these may cause odors in theinterior of the refrigerator.
- Clean the bottle fram, shelves and drawers with a mild detergent and dry with a soft cloth.
- Wipe the outer surface of the refrigerator with a soft cloth dampend with soapy water,detergent, etc., and then wipe dry.
- Do not use hard brushes, clean steel balls, wire brushes, abrasives, such as toothpastes,organic solvents (such as alcohol, acetone, banana oil, etc.), boiling water, acid or alkalineitems clean refrigerator considering that this may damage the fridge surface and interior.
- Do not rinse with water so as not to affect the electrical insulation propertie.

Important: Care must be taken while cleaning/carrying the appliance not to touch the bottom of the condenser metal wires at the back of the appliance, as this could cause injury to fingers and hands.

Light bulb replacement

This appliance is equipped with LED light bulb. It can be used for long time. In case ,the LED bulb is blown, it must be replaced by the qualified person to avoid any hazard.Contact the service agent at 0345 257 7271.

Power failure

In case there is a power failure, you should take the following actions:

If it lasts less than 24 hours, keep the doors closed. This will allow the stored food to stay cold as long as possible. If it lasts more than 24 hours, it is advised to empty the freezer compartment and temporarily store the food in a portable freezer or using artificial ice packs. Try to stay cold for as long as possible.

Remarks: Full appliance will stay cold longer than a partially filled one.If ice crystals are still visible on the food, it may be frozen again, although flavour and aroma may be affected. If food is found to be in a poor condition, it is best to throw it away.

Short vacation

There is no need to disconnect the appliance from the mains if you will be away for two to three weeks. Use up the perishable food.

Long vacation

Remove all the food if you are away for three weeks or more. Unplug the appliance and leave the doors open to provide air circulation to prevent odour and mould.

Moving your appliance

Moving

Refer to section “Transportation” under “Installation”

If you require any technical guidance or find that your product is not operating as intended, a simple solution can often be found in the **Troubleshooting** section of these instructions,

Care and maintenance

Looking after your appliance

Technical Specifications

Model	M50142FFW/M50142FFB
Energy efficiency class	A+
Energy consumption – kWh/year	206 kWh/year
Net storage – volume fresh food (litres)	116L
Net storage – volume frozen food (litres)	51L
Total net storage (litres)	167L
Frozen food compartment rating	4 Star
Climate class	N/ST
Operating noise level dB(A)	42dB(A)
Product Dimensions(mm)	500x540x1418

We apologise for any inconvenience caused by any minor inconsistencies in these instructions, which may occur as a result of product improvements and development.

Disposal information



The symbol on the product or its packaging indicates that this product may not be treated as household waste. Instead it should be handed over to the applicable collection point for the recycling of electrical and electronic equipment. By ensuring this product is disposed of correctly, you will help prevent potential negative consequences for the environment and human health, which could otherwise be caused by inappropriate waste handling of this product. For more detailed information about recycling this product, please contact your local council office, your household waste disposal service or the shop where the product was purchased.

Remember: Old fridges must be disposed of carefully - older models contain CFC gases that are harmful - if in doubt, contact your local council for details on how to dispose of an old fridge.

6 Product support

Product support

Help is always at hand

Troubleshooting

If you have a problem with your product, these questions may be able to assist you?

Question- Appliance does not work.

Answer
Appliance is not switched on - Switch on the appliance.
Mains plug is not plugged in or is loose. -Insert mains plug.
Fuse has blown or is defective - Check fuse, replace if necessary.
Socket is defective - Mains malfunctions are to be corrected by an electrician.

Question - Appliance cools too much.

Answer
Temperature is too cold - Adjust the thermostat dial to a warmer setting.

Question - The food is too warm.

Answer
Temperature is not properly adjusted - Adjust the thermostat to a cooler setting.
Door was open for an extended period - Open the door only as long as necessary.
A large quantity of warm food was placed in the appliance - Adjust the thermostat to a cooler setting. Cool warm food before placing in the refrigerator.
The appliance is near a heat source - Position the refrigerator away from a heat source.

Question- Interior light does not work.

Answer

The LED bulb is blown-Replace the LED bulb by the assistance of qualified person to avoid any hazard. Contact the service agent at 0345 257 7271.

Question-Heavy build up of frost, possibly also on the door seal.

Answer
Door seal is not air tight - Carefully warm the leaking sections of the door seal with a hair dryer(not hotter than approx 50 degree). At the same time shape the warmed door seal by hand such that it sits correctly.

Question - Water on the floor or on storage shelves.

Answer
Water drain hole is blocked - Remove food residue or ice from the entrance of the drain hole.

Question - Appliance is making unusual noises

Answers
Appliance is not level - Readjust the front levelling feet.
Appliance is in contact with wall or other objects. - Push appliance away a short distance
A part at the back of the appliance eg a tube, is in contact with another appliance part or wall - - Gently bend this part away carefully if necessary

If you require any technical guidance or find that your product is not operating as intended, a simple solution can often be found in the **Troubleshooting** section of these instructions,

Product support

Help is always at hand

Help and assistance

If you require any technical guidance or find that your refrigerator is not operating as intended，a simple solution can often be found in the **Troubleshooting** section of these instruction or online at **www.bush-support.com**

If you still require further assistance， call one of our experts on **0345 257 7271.**To help give us give you a fast and efficient service please have the following information ready.

Model Ref.		You can find these on the rating plate-a small information panel （usually a sticker or metal plate）on the rear of your appliance
Serial number		
Date of purchase		This will be shown on your receipt

Local call rates applies*

Line open 8am-7pm Monday to Saturday and 10am-4pm Sunday

*Calls to Bush enquiry lines may attract a charge and set up fee from residential lines depending on your call plan/tariff. Mobile and other providers costs may vary, see www.bt.com/pricing for details.

For security and training purpose， telephone calls to and from customer service centres maybe recorded and monitored.Call from Republic of Ireland will attract international call charges.

CE This appliance complies with the following EEC directives:
2014/35/EU Low voltage directive
2014/30/EU EMC directive

Product support

Help is always at hand

Call us now and activate your 12 month guarantee

Thank you for choosing Bush. Your new product is guaranteed against faults and breakdowns for 12 months.Don't forget to register it with us today so we can provide you with our best possible after-sale service and useful updates.

www.bushregistration.co.uk

FREEPHONE*

0800 597 8548

Lines are open 8am-8pm,365 days a year.*Call may be recorded and monitored.

Your Bush Guarantee

This product is guaranteed for twelve months from the date of original purchase. Any defect that arises due to faulty materials or workmanship will be repaired free of charge (or if applicable the product will be replaced or the purchase price refunded） where possible during this period by the dealer from who your purchased unit.

The guarantee is subject to the following provisions:

- The guarantee does not cover accidental damage， misuse cabinet parts, knobs or consumable items.
- The product must be correctly installed and operated in accordance with the instructions contained in the manual
- It must be used solely for domestic purposes. The guarantee will be rendered invalid if the product is re-sold or has been damaged by inexpert repair.
- Specifications are subject to change without notice.
- Bush disclaim any liability for loss or damage arising from the breakdown of the product
- This guarantee is in addition to and does not diminish your statutory or legal rights

Important Data Protection Information

To find out how we and Domestic & General Insurance Plc use your data please refer to the guarantee registration material or visit www.bushregistrations.co.uk.

If you require any technical guidance or find that your product is not operating as intended, a simple solution can often be found in the **Troubleshooting** section of these instructions,

BUSH

Contact:

www.argos-support.co.uk

Helpline: 0345 257 7271