Galanz

Model# GLF17UWED15/GLF17US1D15
CONVERTIBLE FREEZER/REFRIGERATOR
INSTRUCTION MANUAL

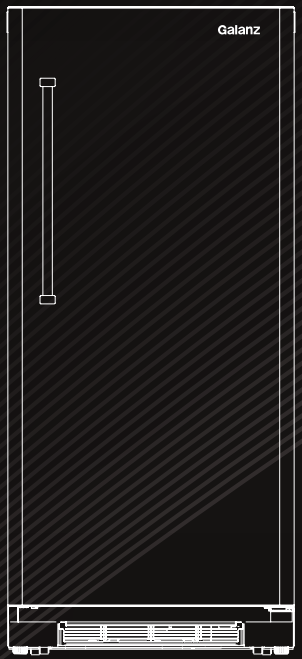

Thank you for purchasing a Galanz product please read this manual carefully for correct usage and safety, and keep for future reference.For service,support and warranty information,call 800-562-0738.

@2021 Galanz Americas Limited Company.

CONTENT

IMPORTANT SAFETY INFORMATION 2

INSTALLATION INSTRUCTIONS 4

OPERATING INSTRUCTIONS 6

CARE & MAINTENANCE 9

TROUBLESHOOTING 11

PRODUCT SPECIFICATIONS 12

PACKING LIST 13

LIMITED WARRANTY 14

WARRANTY REGISTRATION 15

IMPORTANT SAFETY INFORMATION

PRODUCT INTRODUCTION

Your safety and the safety of others is very important. We have provided many important safety messages in this manual and on your appliance. Always read and obey all safety messages.

⚠This is the safety alert symbol.

This symbol alerts you to hazards that can kill or hurt you and others, All safety messages will be preceded by the safety alert symbol and the word “Danger” or “Warning”.

IMPORTANT SAFEGUARDS

When using electrical appliances, basic safety precautions should always be followed to reduce the risk of fire, electric shock and/or injury to persons, including the following:

- Read all instructions before using appliance.
- Do not operate any appliance with a damaged supply cord or plug, or after the appliance malfunctions or has been dropped or damaged in any manner. Supply cord replacement and repairs must be conducted by the manufacturer,its service agent, or similarly qualified persons in order to avoid a hazard. Call the provided customer service number for information on examination, repair, or adjustment.
- Do not use mechanical devices to defrost refrigerator.
- Consult repair manual or owner’s guide before attempting to service this product.

All safety precautions must be followed.

- Disposal of this unit should be in accordance with federal and local regulations.
- Follow handling instructions carefully.
- Do not store explosive substances such as aerosol cans with a flammable propellant in this appliance.

Danger: Risk of fire or explosion. Flammable refrigerant used. Do not puncture refrigerant tubing.

Warning: Keep ventilation openings, in the appliance enclosure or in the built-in structure, clear of obstruction.

Warning: Do not use mechanical devices or other means to accelerate the defrosting process, other than those recommended by the manufacturer.

Warning: Do not damage the refrigerant circuit.

Warning: Do not use electrical appliances inside the food storage compartments of the appliance, unless they are of the type recommended by the manufacturer.

Close supervision is necessary when any appliance is used by or near children. Cleaning and user maintenance

SAVE THESE INSTRUCTIONS

shall not be made by children unless they are supervised. Children should be supervised to ensure that they do not play with the appliance.

Danger: Risk of child entrapment. Before throwing away an old appliance:

- Remove the door or lid.
- Leave shelves in place so that children may not easily climb inside.

This appliance is not intended for use by persons (including children) whose physical, sensory or mental capabilities may be different or reduced,or who lack experience or knowledge, unless such persons receive supervision or training to operate the appliance by a person responsible for their safety.

This appliance is intended to be used in household and similar applications such as:

- Staff kitchen areas in shops, offices and other working environments;
- Farm houses and by clients in hotels, motels and other residential type environments;
- Bed and breakfast type environments;
- Catering and similar non-retail applications.

Grounding Instructions

This appliance must be grounded. Grounding reduces the risk of electrical shock by providing an escape wire for the electrical current.

This appliance has a cord that has a grounding wire with a 3-prong plug. The power cord must be plugged into an outlet that is properly grounded. If the outlet is a 2-prong wall outlet, it must be replaced with a properly grounded 3-prong wall outlet. The serial rating plate indicates the voltage and frequency the appliance is designed for.

Warning: Improper use of the grounding plug can result in a risk of electric shock. Consult a qualified electrician or service agent if the grounding instructions are not completely understood, or if doubt exists as to whether
the appliance is properly grounded.

Do not connect your appliance to extension cords or together with another appliance in the same wall outlet.

Do not splice the power cord.

Do not under any circumstances cut or remove the third ground prong from the power cord. Do not use extension cords or ungrounded (two prongs) adapters.

SAVE THESE INSTRUCTIONS

FEATURES

1. Light Switch
2. Control Panel
3. LED Light
4. Airflow Outlet
5. Temperature Sensor
6. Freezer Shelf
7. Airfow Inlet
8. Shelf Front
9. Door Shelf
10. Adjustable Feet

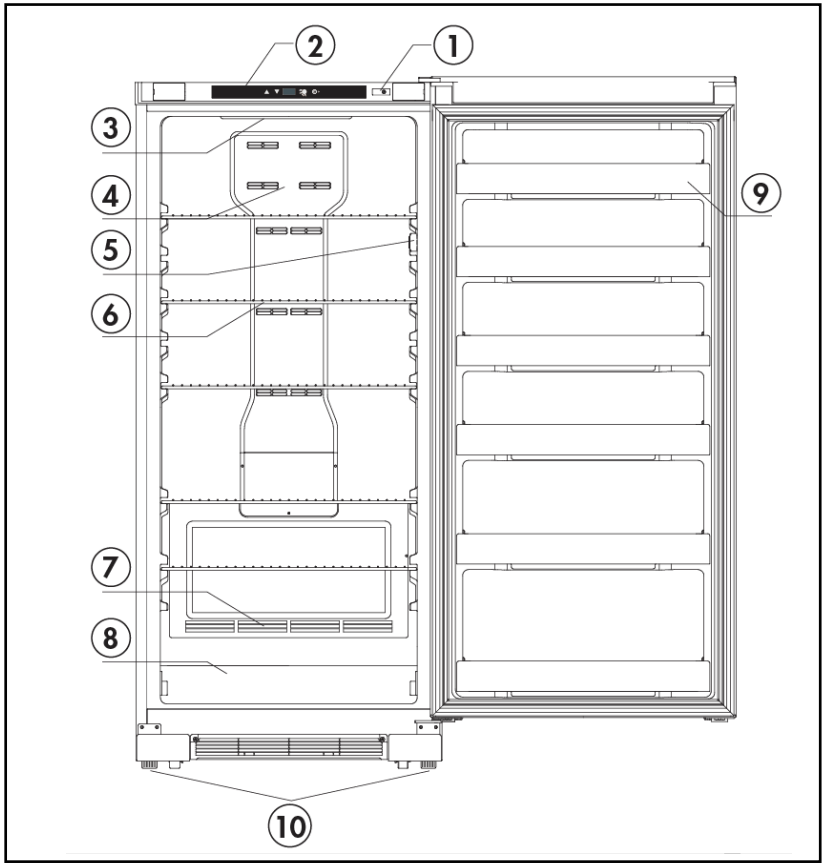

SAVE THESE INSTRUCTIONS

INSTALLATION INSTRUCTIONS

LOCATION

- Two people should be used when moving the appliance.
- Remove interior and exterior packaging prior to installation. Wipe the outside of the appliance with a soft,dry cloth and the inside with a luke warm wet cloth.
- Place the appliance on a floor that is strong enough to support it when it is fully loaded.
- Do not place the appliance in direct sunlight or near sources of heat, such as a stove or heater, as this can increase electrical consumption. Extreme cold ambient temperatures may also cause the appliance to perform improperly.
- Do not use the appliance near water, for example in a wet basement or near a sink.
- This appliance is intended for household use only. It is not designed for outside installation, including anywhere that is not temperature controlled (garages, porches, vehicles, etc.).
- Before connecting the appliance to a power source, let it stand upright for approximately 6 hours. This will reduce the possibility of a malfunction in the cooling system from handling during transportation.
- This appliance is 76.1 cm (29.96 inches) wide by 170.9 cm (67.28 inches) high by 72.4 cm (28.50 inches) deep. Make sure that you leave the minimum amount of space between the appliance and all surrounding walls and vents.
- Allow 12.7 cm (5 inches) of space between the back, sides and top of the appliance and all adjacent walls.
- This appliance is intended for free-standing installation only and is not intended to be built into a cabinet or counter. Building in this appliance can cause it to malfunction.

LEVELING INSTRUCTIONS

There are two adjustable legs on the bottom of the appliance that can be turned up or down to ensure that the appliance is level.

1. Turn the leveling leg counter-clockwise as far as it will go, until the top of the foot is touching the bottom of the chassis.
2. Slowly turn the leveling leg clockwise until the appliance is level.

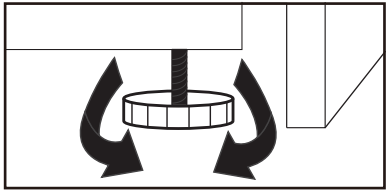

SAVE THESE INSTRUCTIONS

CONTROL PANEL



Temperature setting：The unit can be converted from a Freezer to a Refrigerator by adjusting the temperature using the arrow keys.

When the temperature display is flashing, you can set the fridge temperature between 0°C to 8°C (32°F to 46°F) and freezer temperature between -24°C to -14°C (-11°F to 7°F)the recommended temperature setting is 3°C(37°F) and -18°C (0°F).

Fast Freeze Function（Snow Flake Button）:
This function should be used when the appliance is first turned on, when it has been filled with groceries or if the door has been open for an extended period. This function will run the compressor constantly to reach the coldest temperature as quickly as possible. Press and hold the fast freeze button （Snow Flake）for three seconds to activate the fast freeze. The LED indicator will illuminate.
To cancel the fast freeze function press and hold the fast freeze button（Snow Flake） until the LED indicator turns off.
When the fast freeze cycle has finished or is canceled the appliance will revert back to the last set temperature.
Temperature scale: To switch between °C and °F, press the °C/°F key, the corresponding indicator light will illuminate.

Door Ajar Alarm: This appliance is equipped with a door alarm that will sound if the door is left open for more than 3minutes. The alarm will beep and the display will flash continuously until the door is closed.

HANDLE INSTALLATION

The appliance ships with the handle inside the cabinet. It must be installed by the end user. The appliance should be unplugged before installing the handle.
1. Position the handle over the exposed door handle posts.
2. Insert screws into the handle bracket and tighten them with the provided allen key. Tighten until snug.
Note: The handle may look slightly different based on the color of the appliance.

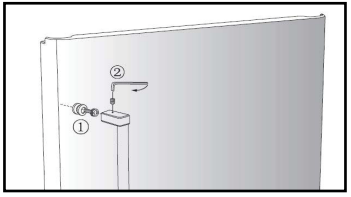

SAVE THESE INSTRUCTIONS

DOOR REVERSAL INSTRUCTIONS

If the appliance is placed on its back or side for any length of time during this process, it must be allowed to remain upright for 6 hours before plugging it in to avoid damage to the internal components.

1. Remove one screw from top hinge cover (A) and then remove top hinge cover.

2. Remove four screws from top hinge (B) and then remove top hinge, top door spindle (C) and top hinge spacer (D).

3. Remove door from unit and set aside. Ensure that you do not damage the bottom door spindles (F).

4. Remove roller caps at bottom of unit (E). (Diagram on next page)

5. Remove four screws each from both bottom hinges and then swap the bottom hinges (J). Ensure that the C-shaped hinge is on the side of the unit opposite the handle. (Diagram on next page)

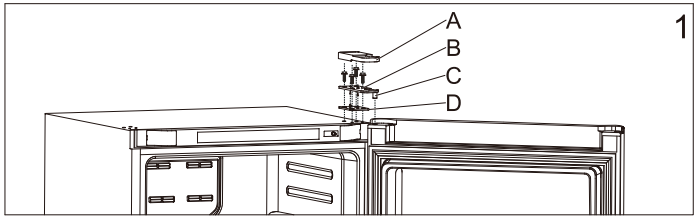

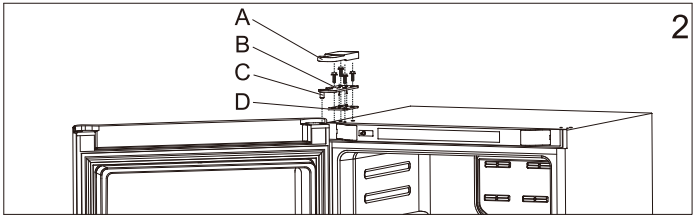

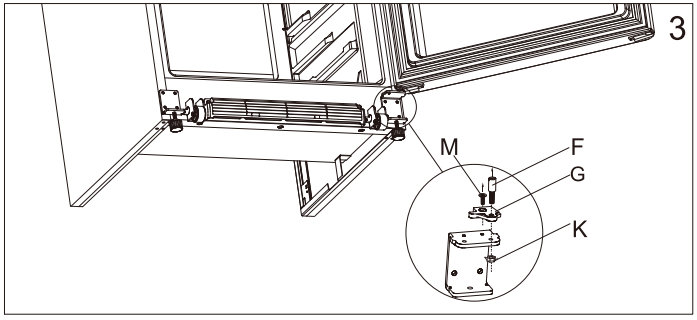

SAVE THESE INSTRUCTIONS

6. Reinstall four screws each in both bottom hinges (F).

7. Reinstall the bottom door spindles(F and G).

8. Reinstall the roller caps at the bottom of the unit (E).

9. Reinstall the door and ensure that the bottom door spindle (F) is placed in the hole in bottom hinge that is closest to the outside of the unit.

10. Replace hinge spacer (D), replace top door spindle (C), reinstall top hinge with four screws (B). Ensure that you flip the top hinge to its opposite side so that the top door spindle is in the correct position

11. Reinstall the top hinge cover (A) with one screw. A top hinge cover for the opposite side of the unit can be found in the accessory bag inside the unit.

Note: When installing the door, ensure that the top of the door is level with the top of the cabinet. If the door is not level, the rubber gasket will not make a good seal with the cabinet which can cause the appliance to malfunction.

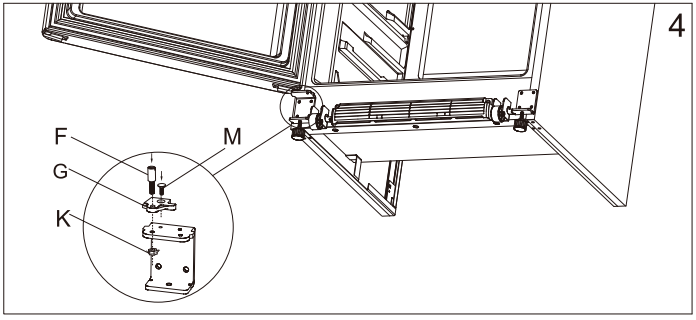

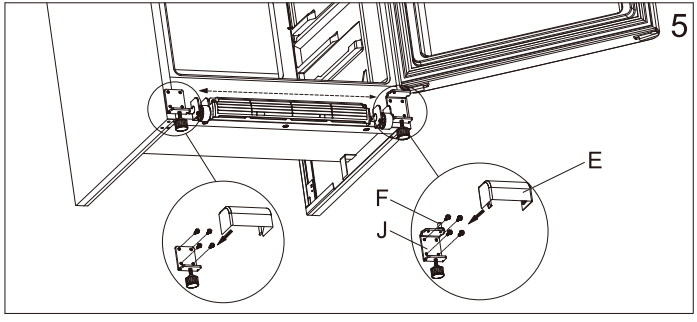

CLEANING

Ensure the appliance is unplugged before cleaning.

- To clean the inside of the appliance, use a soft cloth and a solution of a tablespoon of baking soda to one quart of water or a mild soap solution or some mild detergent.
- Wash removable shelves in a mild detergent solution, then dry and wipe with a soft cloth.
- Clean the outside with a soft, damp cloth and some mild detergent.
- It is important to keep the area clean where the door seals against the cabinet. Clean this area with a soapy cloth. Rinse with a damp cloth and let dry.

Note: Do not use cleaners containing ammonia or alcohol on the appliance. Ammonia or alcohol can damage the appearance of the appliance. Never use any commercial or abrasive cleaners or sharp objects on any part of the appliance.

POWER FAILURE

Most power failures are corrected within a few hours and should not affect the temperature of your appliance if you minimize the number of times the door is opened. If the power is going to be off for a longer period of time, take the proper steps to protect your contents

Note: Wait 3 to 5 minutes before attempting to restart the refrigerator if operation has been interrupted.

DEFROST

This unit is equipped with an automatic defrost function and does not require manual defrosting. Defrost water from the appliance is channeled into a drip tray located above the compressor. Heat transfer from the compressor causes the defrost water to evaporate.

ERROR CODES

- E1: Sensor failure.
- E2: Defrosting sensor failure.
- E3: Sensor failure and defrosting sensor failure.
- H: High temperature.

SAVE THESE INSTRUCTIONS

VACATION

• Short vacations: Leave the appliance operating during vacations of less than three weeks.
• Long vacations: If the appliance will not be used for several months, remove all items and turn off the appliance. Clean and dry the interior thoroughly. To prevent odor and mold growth, leave the door open slightly, blocking it open if necessary.

ENERGY SAVING TIP

The appliance should be located in the coolest area of the room, away from heat producing appliances, and out of direct sunlight. Do not overload the unit or block any ventilation openings.

MOVING

• Remove all items.
• Tape the door shut.
• Be sure the appliance stays secure in the upright position during transportation. Also protect the outside of the appliance with a blanket or similar item.
• If the appliance is placed on its back or side during transportation, upon reaching the destination, allow it to remain in its operating position for 6 hours to avoid damage to internal components.

DISPOSAL

This appliance may not be treated as regular household waste, it should be taken to the appropriate waste collection point for recycling of electrical components. For information on local waste collection points, contact your local waste removal agency or government office.

SAVE THESE INSTRUCTIONS

TROUBLESHOOTING

PPROBLEM	POSSIBLE CAUSE
No power	• A fuse may be blown or the circuit breaker tripped • Plug not fully inserted into the wall outlet
Internal temperature not cold enough	• Temperature setting is too warm • Door is not shut properly or opened excessively • Exhaust vent is obstructed • Recently added a large quantity of warm food to the cabinet • Close proximity to heat source or direct sunlight • Ambient temperature or humidity is very high
Appliance runs continuously	• Temperature setting is too cold • Door not shut properly or opened excessively • Exhaust vent is obstructed • Recently added a large quantity of warm food to the cabinet • Close proximity to heat source or direct sunlight • Ambient temperature or humidity is very high
Internal temperature is too cold	• Temperature setting is too cold
Noises	• Parts are expanding and/or the refrigerant is circulating; this is normal

SAVE THESE INSTRUCTIONS

PRODUCT SPECIFICATIONS

Model		GLF17UWED15/GLF17US1D15
Climate class		T
Electric shock protection type		I
Capacity(cu.ft)	Freezer	16.7
	Refrigerator	16.7
Voltage(V)		115
Frequency(Hz)		60
Current(A)		3.5
Voice[dB(A)]		50
Yearly enegy consumption(kW.h)		481
Refrigerant		R600a/72g(2.54oz)
Weight(Lbs)		188.94
Interior temperature	Freezer	-24°C ~ -14°C(-11°F~7°F)
	Refrigerator	0°C ~ 8°C(32°F~ 46°F)
Dimension(inch)	Width	30.0
	Depth	28.5
	Height	67.3

PACKING LIST

Parts	Number
Wire shelf	5 pcs
Door bins	6 pcs
Drip Tray	1 pc
Handle	1 pc
Owner's manual	1 copy

Note: Products are subject to improve from time to time, any changes in parts without further notice.

LIMITED WARRANTY

Galanz Americas Limited Company - Product Warranty

This warranty applies to products sold by Galanz Americas in the U.S. This warranty is in lieu of any other warranty and expressly applies to the individual product only.

Galanz product is warrantied for one year following purchase for defects in material and workmanship. Please save your receipt as proof of purchase is required to make a warranty claim. During this period,we will provide the purchase price of this product, a replacement or the equivalent per our , discretion or service in select cases. In the event that service is determined to be agreeable to both parties, then the product must be brought to the nearest servicer by the consumer.

The warranty cannot be transferred through resale, including the resale through a 3rd party unauthorized retailer and is only bestowed upon the original consumer purchaser upon purchase from an authorized retailer.

This warranty does not cover and excludes damage or defects caused by:

- Consumer misuse
- Abuse
- Neglect including the failure to clean and/ or provide adequate regular maintenance as outlined in the user manual
- Commercial use
- Subjecting the product to any voltage outside the specified range
- Loss of parts
- The affixing of any attachments not provided with the product
- Accident, or
- Use in a manner not intended and outlined in the user manual.

Any subsequent damages caused by the above listed exclusions will not be covered and any claims determined to meet the above exclusions will be denied. All liability is limited to the purchase price and does not include any:

- Retail offered extended warranties
- Tax
- Other charges (including postage to send required materials)
- Incidental and/or consequential damages associated with the product in question.

Every implied warranty, including any statutory warranty of merchantability or fitness for a particular purpose is disclaime except to the extent prohibited by law, in which case such warranty is limited to the duration of this written warranty. This warranty gives you specific legal rights. You may have other legal rights that vary depending on where you live. Some states do not allow limitations on implied warranties or special, incidental, or consequential damaged, so the above limitations may not apply to you.

If you have a claim under this warranty, please call our Customer Service number: 1-800-562-0738.

For faster service, please have the model number, serial number, and receipt ready for the operator to assist you.

WARRANTY REGISTRATION

Please mail this warranty card to the address below within 30 days of purchase.
Or you can register your product on line by going to www.galanz.com\us.

Galanz Americas,55 Challenger Road, Suite 503,Ridgefield Park,NJ 07660.
PLEASE PRINT CLEARLY.

Name _____

Address _____

City _____ State _____ ZIP _____

Phone _____ Email _____

Model Number _____ Serial Number _____

Purchase Location _____

You must attach a copy of your purchase receipt to validate your registration.

Galanz

©2021 Galanz Americas Limited Company