SUMMIT

FFBF287SSIM
FFBF286SS
FFBF281W

BOTTOM-MOUNT REFRIGERATOR FREEZERS

en

Instruction Manual



ENERGY STAR

Please read this manual before using the product!

Dear Customer,

We'd like you to make the best use of our product, which has been manufactured in modern facilities with care and meticulous quality controls.

Thus, we advice you to read the entire user manual before you use the product. In case the product changes hands, do not forget to hand the guide to its new owner along with the product.

This guide will help you use the product quickly and safely.

- Please read the user guide carefully before installing and operating the product.
- Always observe the applicable safety instructions.
- Keep the user guide within easy reach for future use.
- Please read any other documents provided with the product.

Keep in mind that this user guide may apply to several product models. The guide clearly indicates any variations of different models.

	Important information and useful tips.
	Risk of life and property.
	Risk of electric shock.
	The product's packaging is made of recyclable materials, in accordance with the National Environment Legislation.

1 Important instructions for safety and environment 3

1.1 General safety 3
1.1.1 HC warning 4
1.1.2 For products with a water dispenser 4
1.2 Intended use 4
1.3 Children's safety 5
1.4 Compliance with WEEE Directive and Disposing of the Product: 5
1.5 Compliance with RoHS Directive: 5
1.6 Package information 5

2 Your Refrigerator 7

3 Installation 8

3.1. Right place for installation 8
3.2. Attaching the plastic wedges 8
3.3. Adjusting the stands 8
3.4. Power connection 9
3.5. Connecting the water hose to the refrigerator 9
3.6. Connecting the water line to the water supply 9
3.7. Reversing the doors 10
3.8. Reversing the doors 11

4 Preparation 13

4.1. What to do for energy saving 13
4.2. First Use 13

5 Operating the product 14

5.1. Indicator panel 14
5.2. Ice bucket 16
5.3. Eggholder 16
5.4. Fan 16
5.5. Vegetable bin 16
5.6. Zero degree compartment 16
5.7. Automatic ice machine 17
5.8. Freezing fresh food 18
5.9. Recommendations for storing frozen foods 18
5.10. Deep freezer details 19
5.11. Placing the food 19
5.12. Door open alert 19
5.13. Changing the opening direction of the door 19
5.14. Interior light 19

6 Maintenance and cleaning 20

6.1. Avoiding bad odors 20
6.2. Protecting the plastic surfaces 20
6.3. Door Glass 20

7 Troubleshooting 21

8 LIMITED WARRANTY 24

1 Important instructions for safety and environment

This section contains safety instructions that will help protect from risk of personal injury or property damage. Failure to follow these instructions shall void any warranty.

1.1 General safety

- This product can be used by children at and above 8 years old and by persons whose physical, sensory or mental capabilities were not fully developed or who lack experience and knowledge provided that they are supervised or trained on the safe usage of the product and the risks it brings out. Children must not play with the product. Cleaning and maintenance works should not be performed by children unless they are supervised by someone.
- Unplug the product if a failure occurs while it is in use.
- If the product has a failure, it should not be operated unless it is repaired by the Authorised Service Agent. There is the risk of electric shock!
- Connect the product to a grounded outlet protected by a fuse complying with the values in the rating plate. Have the grounding installation made by a qualified electrician. Our company shall not be liable for any damages that will arise when the product is used without grounding in accordance with the local regulations.
- Unplug the product when not in use.
- Never wash the product by spreading or pouring water onto it! There is the risk of electric shock!
- Never touch the plug with wet hands! Never unplug by pulling on the cable, always pull out by grabbing the plug.
- It is recommended to clean the tip of the plug regularly with a dry cloth.

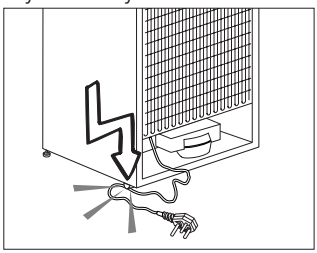

- Do not plug in the refrigerator if the wall outlet is loose.
- Never connect your refrigerator to electricity-saving systems. Such systems are harmful for the product.
- Unplug the product during installation, maintenance, cleaning and repairing procedures.
- Always have the installation and repairing procedures carried out by the **Authorised Service Agent**. Manufacturer shall not be held liable for damages that may arise from procedures carried out by unauthorised persons.
- Do not eat cone ice cream and ice cubes immediately after you take them out of the freezer compartment! This may cause frostbite in your mouth!
- Do not touch frozen food by hand! They may stick to your hand!
- Do not put bottled and canned liquid beverages in the freezer compartment. They may burst!
- Never use steam and steam assisted cleaning materials to clean or defrost the refrigerator. Steam will cause short circuit or electric shock since it would get into contact with the electrical parts in the refrigerator!
- Do not use mechanical devices or other methods to accelerate the defrosting process, other than those recommended by the manufacturer.
- Never use the parts on your refrigerator such as the door and drawer as a means of support or step. This will cause the product to tip over or parts of it get damaged.
- Do not damage the cooling circuit, where the refrigerant is circulating, with drilling or cutting tools. The refrigerant that might blow out when the gas channels of the evaporator, pipe extensions or surface coatings are punctured may cause skin irritations and eye injuries.
- Do not cover or block the ventilation holes on the refrigerator with any material.
- Place the beverage with higher proofs tightly closed and vertically.
- Do not use gaseous sprays near the product since there is the risk of fire or explosion!
- Flammable items or products that contain flammable gases (e.g. spray) as well as the explosive materials should never be kept in the appliance.

- Do not place containers filled with liquid on top of the product. Spilling water on an electrical component may cause electric shocks or risk of fire.
- Do not store products (vaccines, heat-sensitive medicines, scientific materials and etc.) that require a precise temperature control in the refrigerator.
- If you will not operate the product for a long period of time, unplug and unload the food in it.
- If the product is equipped with blue light, do not look at the blue light with optical tools.
- Exposing the product to rain, snow, sun and wind is dangerous with respect to electrical safety.
- In products with mechanical control (thermostat), wait for minimum 5 minutes to plug in the product again after unplugging it.
- Do not overload the product. It may fall when the door is opened, and cause injury or damage. Similar problems may occur in case of putting things on top of the product.
- If the product's door is equipped with a handle, do not pull by the handle when changing the place of the product. Handle may get loose.
- Pay attention not to have your hand or any part of your body get caught by the moving parts inside the product.

1.1.1 HC warning

- If your product's cooling system contains R600a:

This gas is flammable. Therefore, pay attention to not damaging the cooling system and piping during usage and transportation. In the event of damage, keep your product away from potential fire sources that can cause the product catch a fire and ventilate the room in which the unit is placed.

Ignore this warning if your product's cooling system contains R134a.

Type of gas used in the product is stated in the type plate which is on the left wall inside the refrigerator.

Never throw the product in fire for disposal.

	If the product is equipped with a cooling system containing R134a gas, ignore this warning.
	You can learn the gas used in production of your product on the rating plate located on the left inner part of it.
	**WARNING:** Never dispose of the product in fire.

1.1.2 For products with a water dispenser

- Pressure for cold water inlet shall be maximum 90 psi (6.2 bar). If your water pressure exceeds 80 psi (5.5 bar), use a pressure limiting valve in your mains system. If you do not know how to check your water pressure, ask for the help of a professional plumber.
- If there is risk of water hammer effect in your installation, always use water hammer prevention equipment in your installation. Consult Professional plumbers if you are not sure that there is no water hammer effect in your installation.
- Do not install on the hot water inlet. Take precautions against the risk of freezing of the hoses. Water temperature operating interval shall be 33°F (0.6°C) minimum and 100°F (38°C) maximum.
- Use only potable water.

1.2 Intended use

- This product has been designed for domestic use. It is not suitable for commercial use and it must not be used out of its intended use.
- Product must be used only for storing food.

- The manufacturer waives any responsibility arisen from incorrect usage or transportation.
- The service life of your product is 10 years. During this period, original spare parts will be available to operate the appliance properly.

1.3 Children's safety

- If the door has a lock, the key should be kept away from reach of children.
- Children must be supervised to prevent them from tampering with the product.



DANGER: Risk of child entrapment. Before you throw away your old refrigerator or freezer:

- Take off the doors.
- Leave the shelves in place so that children may not easily climb inside.

1.4 Compliance with WEEE Directive and Disposing of the Product:

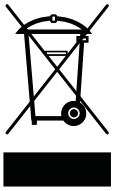

This product complies with EU WEEE Directive (2012/19/EU). This product bears a classification symbol for electrical and electronic equipment (WEEE).This product has been manufactured with high quality parts and materials which can be reused and are suitable for recycling. Do not dispose of the waste product with normal domestic and other wastes at the end of its service life. Take it to the collection center for the recycling of electrical and electronic equipment. Please consult your local authorities to learn about these collection centers.

1.5 Compliance with RoHS Directive:

- The product you have purchased complies with EU RoHS Directive (2011/65/EU). It does not contain harmful and prohibited materials specified in the Directive.

1.6 Package information

- Packaging materials of the product are manufactured from recyclable materials in accordance with our National Environment Regulations. Do not dispose of the packaging materials together with the domestic or other wastes. Take them to the packaging material collection points designated by the local authorities.



DANGER: Risk Of Fire or Explosion. Flammable Refrigerant Used. Do Not Use Mechanical Devices To Defrost Refrigerator. Do Not Puncture Refrigerant Tubing".



DANGER: Risk Of Fire Or Explosion. Flammable Refrigerant Used. To Be Repaired Only By Trained Service Personnel. Do Not Puncture Refrigerant Tubing".

Safety and environment instructions



CAUTION : Risk Of Fire Or Explosion. Flammable Refrigerant Used. Consult Repair Manual/Owner's Guide Before Attempting To Service This Product. All Safety Precautions Must be Followed.



CAUTION : Risk Of Fire Or Explosion Due To Puncture Of Refrigerant Tubing; Follow Handling Instructions Carefully. Flammable Refrigerant Used".



CAUTION : Risk Of Fire Or Explosion. Dispose Of Properly In Accordance With Federal Or Local Regulations. Flammable Refrigerant Used.

2 Your Refrigerator

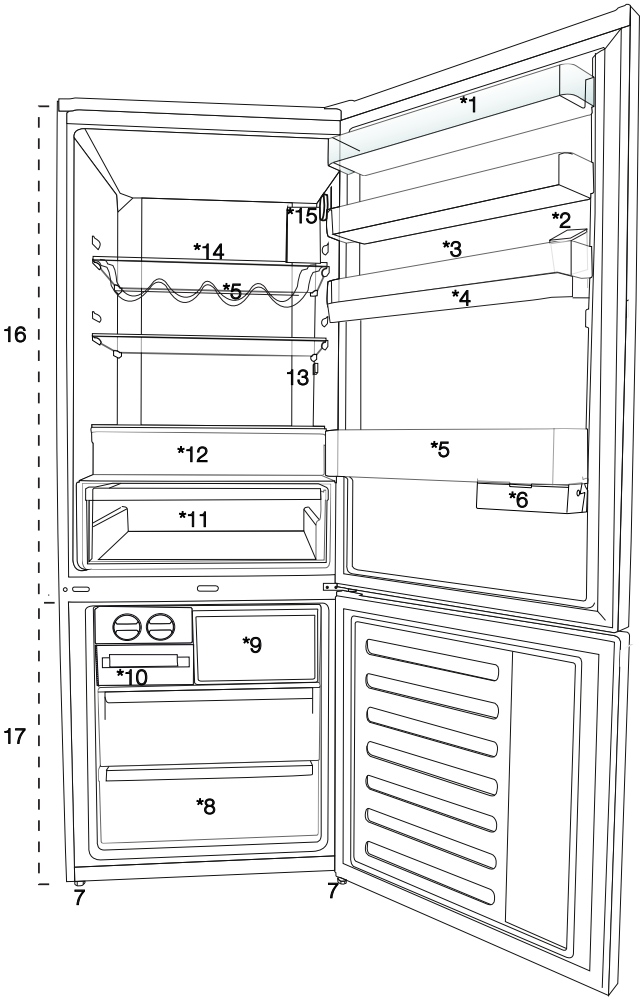

1. Cooler compartment door shelf
2. Water dispenser filling tank
3. Egg section
4. Water dispenser reservoir
5. Bottle shelf
6. Sliding storage box
7. Adjustable legs
8. Deep freezer compartment
9. Quick freeze compartment
10. Ice cube tray & Ice bank
11. Vegetable bin
12. Zero degree compartment
13. Interior light
14. Cooler compartment glass shelf
15. Temperature adjustment button
16. Cooler compartment
17. Freezer compartment

Pictures given in this manual are given as example figures and they may not be exactly the same as your product. If your product does not comprise the relevant parts, the information pertains to other models.

3 Installation

3.1. Right place for installation

Contact the Authorized Service for the product's installation. To ready the product for installation, see the information in the user guide and make sure the electric and water utilities are as required. If not, call an electrician and plumber to arrange the utilities as necessary.

	**WARNING:** The manufacturer assumes no responsibility for any damage caused by the work carried out by unauthorized persons.
	**WARNING:** The product's power cable must be unplugged during installation. Failure to do so may result in death or serious injuries!
	**WARNING:** If the door span is too narrow for the product to pass, remove the door and turn the product sideways; if this does not work, contact the authorized service.

- Place the product on a flat surface to avoid vibration.
- Place the product at least 30 cm (12") away from the heater, stove and similar sources of heat and at least 5 cm (2") away from electric ovens.
- Do not expose the product to direct sunlight or keep in damp environments.
- The product requires adequate air circulation to function efficiently.
- If the product will be placed in an alcove, remember to leave at least 5 cm distance between the product and the ceiling and the walls.
- Do not install the product in environments with temperatures below -5°C (23°F).

3.2. Attaching the plastic wedges

Use the plastic wedges included with the product to provide sufficient space for air circulation between the product and the wall.

1. To attach the wedges, remove the screws on the product and use the screws provided with the wedges.

2. Attach 2 plastic wedges on the ventilation cover

3.3. Adjusting the stands

If the product is not in balanced position, adjust the front adjustable stands by rotating right or left.

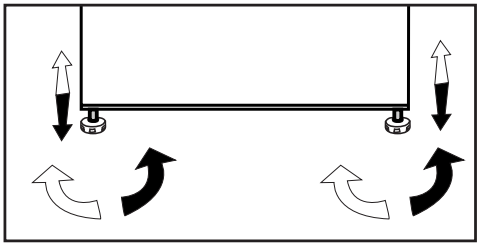

3.4. Power connection

	WARNING: Do not use extension or multi sockets in power connection.
	WARNING: Damaged power cable must be replaced by Authorized Service.
	When placing two coolers in adjacent position, leave at least 4 cm distance between the two units.

- Our firm will not assume responsibility for any damages due to usage without grounding and power connection in compliance with national regulations.
- The power cable plug must be easily accessible after installation.
- Connect the refrigerator to a grounded socket with 110V/6 0 Hz voltage. The plug must comprise a 10-16A fuse.
- Do not use multi-group plug with or without extension cable between the wall socket and the refrigerator.

3.5. Connecting the water hose to the refrigerator

1. Slip the union (b) onto the water hose (a).

2. Push the water hose downwards firmly to slip it onto the water inlet valve (c).

3. Tighten the union (c) by hand to secure it onto the water inlet valve.

Normally, you are not required to tighten the union with a tool. However, you can use a wrench or pliers to tighten the union if there is a leakage

3.6. Connecting the water line to the water supply

Connect the water line to a water supply valve. If a valve is not present or you are not sure, consult a qualified plumber.

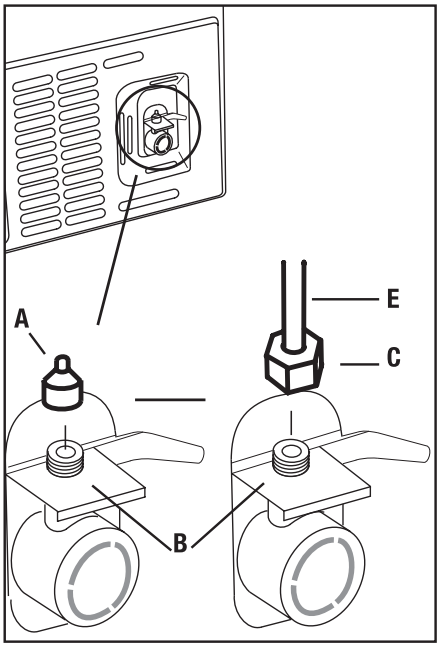

3.7. Reversing the doors

Proceed in numerical order .

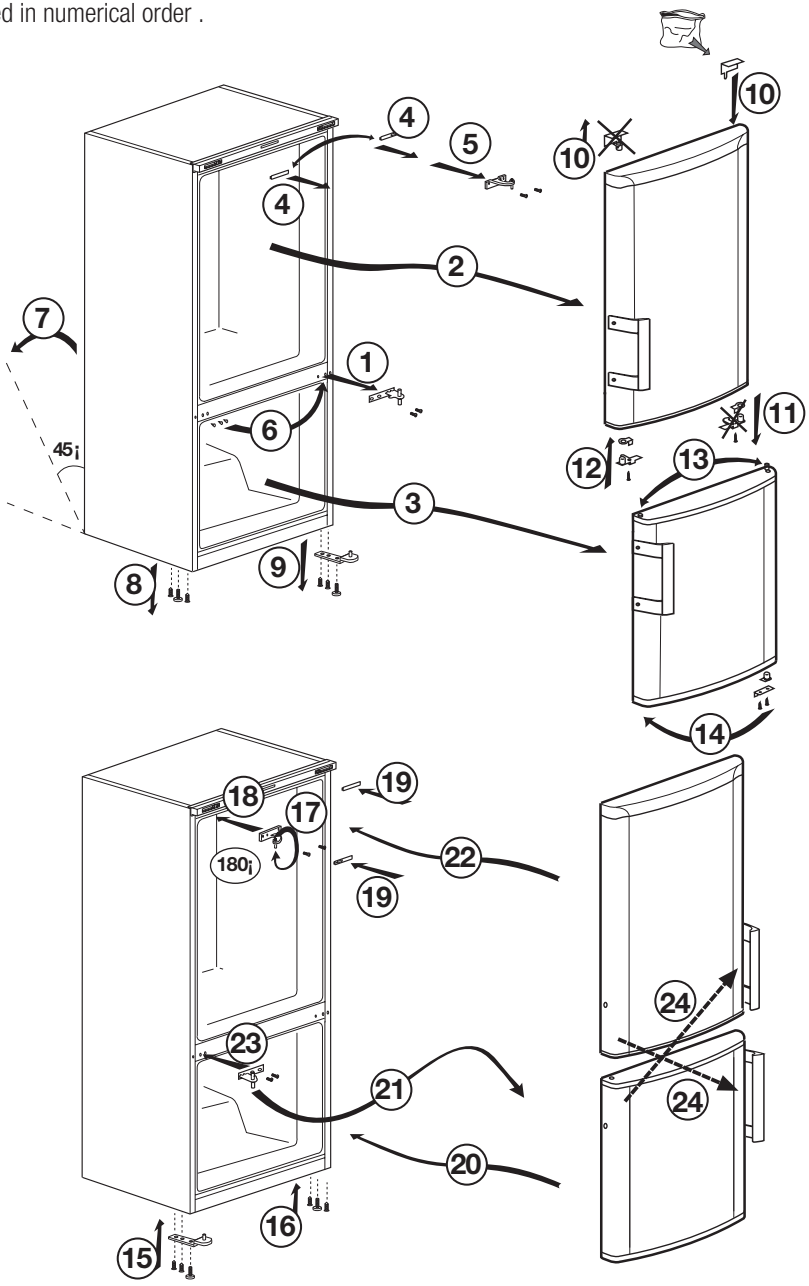

3.8. Reversing the doors

Proceed in numerical order .

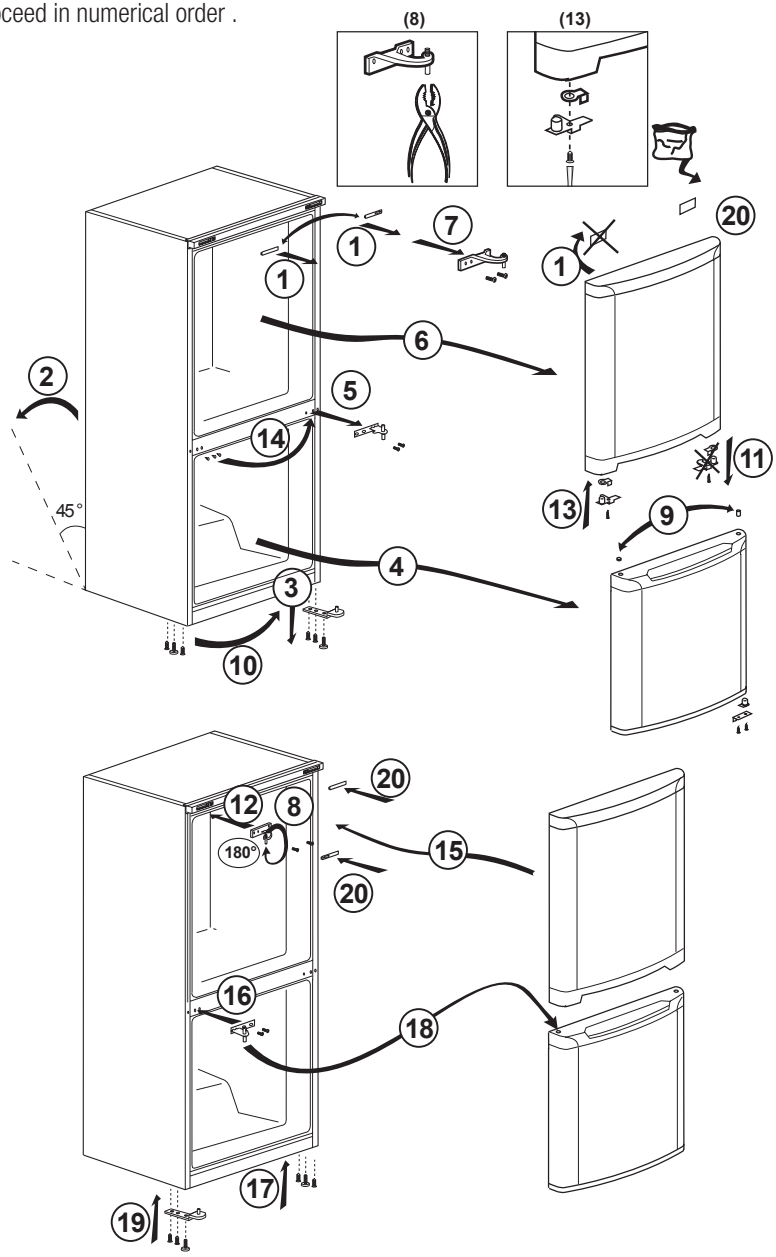

Installation

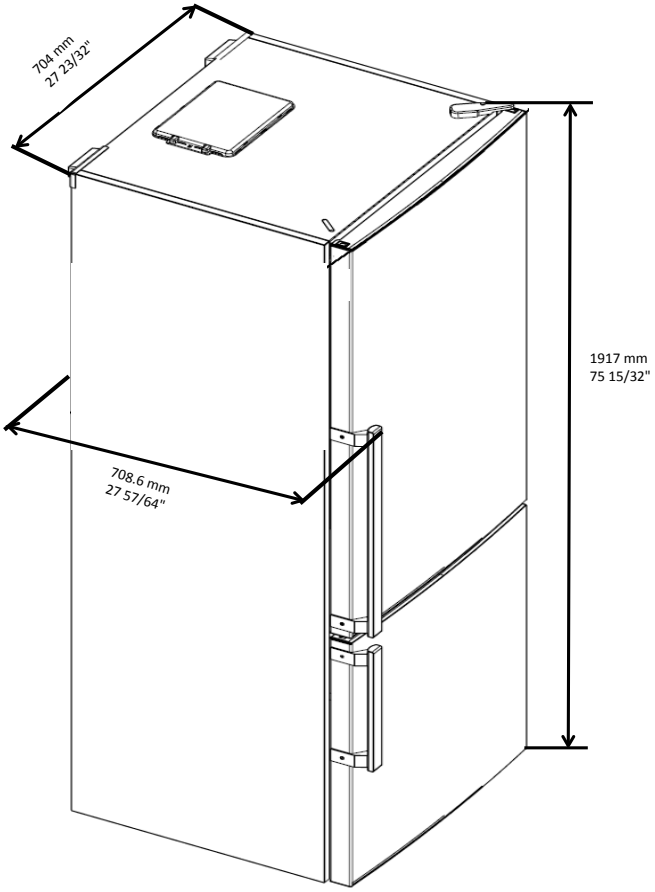

Height (cm/inch) unpacked	1917 -75 15/32”
Width (cm/inch) unpacked	704-27 23/32”
Depth (cm/inch) unpacked	708.6- 27 57/64”
Height (cm/inch)packed	1978- 77 7/8”
Width (cm/inch)packed	747 - 29 13/32”
Depth (cm/inch) packed	742- 29 7/32”
Gross Weight (Kg) / lbs	90 - 198.5
Net Weight (Kg) / lbs	84 - 184.2

4 Preparation

4.1. What to do for energy saving

Connecting the product to electronic energy-saving systems is harmful, as it may damage the product.

- Do not keep the refrigerator doors open for long periods.
- Do not place hot food or beverages into the refrigerator.
- Do not overfill the refrigerator; blocking the internal air flow will reduce cooling capacity.
- In order to store the maximum amount of food into the cooler compartment of your refrigerator, you should take out the upper drawers and place it onto the glass rack. The declared energy consumption of your refrigerator was determined by taking out the cooler, ice tray and upper drawers in a way that will enable maximum storage. Using the below drawer when storing is strongly recommended. Energy saving function should be activated for best energy consumption.
- You should not block the airflow by putting food in front of the cooler fan. A space of minimum 3cm must be left in front of the protective fan wire when placing food.
- Depending on the product's features; defrosting frozen foods in the cooler compartment will ensure energy saving and preserve food quality.
- Food should be stored using the drawers in the cooler compartment in order to ensure energy saving and protect food in better conditions.
- Food packages should not be in direct contact with the heat sensor located in the cooler compartment. If they are in contact with the sensor, energy consumption of the appliance might increase.
- Make sure the foods are not in contact with the cooler compartment temperature sensor described below.

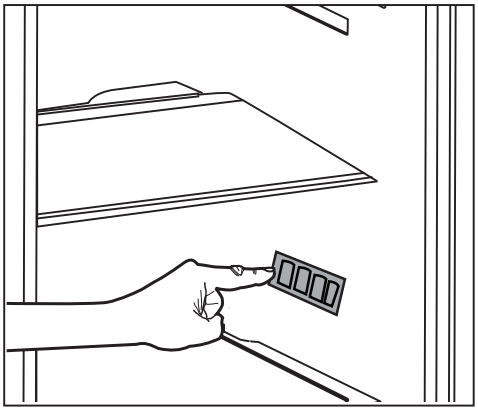

4.2. First Use

Before using your refrigerator, make sure the necessary preparations are made in line with the instructions in "Safety and environment instructions" and "Installation" sections.

- Keep the product running with no food inside for 6 hours and do not open the door, unless absolutely necessary.

A sound will be heard when the compressor is engaged. It is normal to hear sound even when the compressor is inactive, due to the compressed liquids and gasses in the cooling system.

Front edges of the product might heat up. This is normal. These areas are designed to warm up in order to prevent condensation.

In some models indicator panel turns off automatically 5 minutes after the door closes. It will be reactivated when the door is open or any button is pressed.

5 Operating the product

5.1. Indicator panel

Indicator panels may vary according to the product model.
Audio – visual functions on the indicator panel help you in using your product.

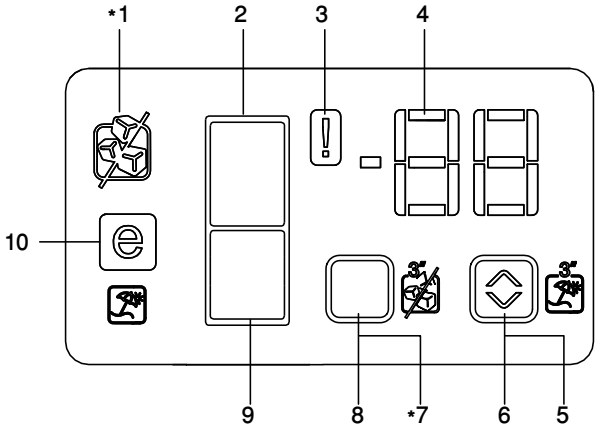

1. Automatic Ice Machine Off/On indicator
2. Fridge Compartment Indicator
3. Error Status Indicator
4. Temperature Indicator
5. Vacation Button
6. Temperature Setting Button
7. Ice Cancel Button
8. Compartment Selection Button
9. Freezer Compartment Indicator
10. Economy Mode Indicator

***Optional:** The figures in this user guide are intended as drafts and may not perfectly match your product. If your product does not comprise the relevant parts, the information pertains to other models.

Using the product

1. Automatic Ice Machine Off/On indicator
This symbol appears on the display when Ice Off function is activated.

2. Fridge Compartment Indicator
Fridge compartment light illuminates when adjusting the fridge compartment temperature.

3. Error Status Indicator
If your refrigerator does not cool adequately or if there is a sensor failure, this indicator will be activated. When this indicator is active, Freezer Compartment Temperature indicator will display “e” and Fridge Compartment Temperature Indicator will display numbers such as “1,2,3…”. These numbers on the indicator provide information about the error to the service personnel.

4. Temperature Indicator
Indicates the temperatures of fridge, freezer compartment.

5. Vacation Button
Press and hold this button for 3 sec. to activate the Vacation function. Press this button again to deactivate the selected function.

6. Temperature Setting Button
Changes the temperature of the relevant compartment between -5°F/ -21°C and +46 °F/8 °C.

7. Ice Cancel Button
Refrigerator stops ice production when you press selection button for 3 seconds.

8. Refrigerator Compartment Selection Button Press Refrigerator Compartment Selection Button to switch between fridge and freezer compartments.

9. Freezer Compartment Indicator
Freezer compartment light illuminates when adjusting the freezer compartment temperature.

10. Economy Mode Indicator
This indicates that the refrigerator is running in energy-efficient mode. This indicator will be active if the Freezer Compartment temperature is set to +5°F/-15 °C.

5.2. Ice bucket

***optional**

- Take the ice bucket from the freezer compartment.
- Fill the ice bucket with water.
- Place the ice bucket into the freezer compartment.
- The ice will be ready after approximately two hours. Take the ice bucket from the freezer compartment and bend in sightly over the holder that you are going to serve. Ice will easily pour into the serving holder.

5.3. Eggholder

You can put the eggholder on the door or body rack of your choice. If you decide to put it on the body rack, it is recommended to prefer the shelves below as they are colder.



Do not put the eggholder into the freezer compartment.

5.4. Fan

Fan was designed to circulate the cold air inside your refrigerator homogeneously. Operating time of the fan might vary depending the features of your product.

While in some products fan only operates with compressor, in others control system determines the operating time based on the need for cooling.

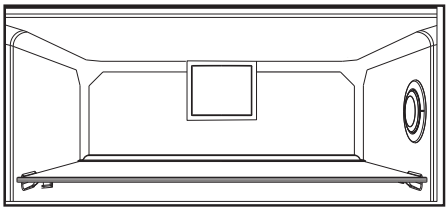

5.5. Vegetable bin

***optional**

Product's vegetable bin is designed to keep vegetables fresh by preserving humidity. For this purpose, the overall cold air circulation is intensified in the vegetable bin.

5.6. Zero degree compartment

***optional**

Use this compartment to keep delicatessen at lower temperatures or meat products for immediate consumption.

Zero degree compartment is the coolest place where foods such as dairy products, meat, fish and chicken can be stored in ideal storage conditions. Vegetables and/or fruits should not be stored in this compartment.

5.7. Automatic ice machine

***optional**

Automatic ice machine enables you to easily make ice in your refrigerator. In order to obtain ice from the ice machine, take out the water tank in the cooler compartment, fill it with water and fix it back.

First ice will be ready in about 2 hours in the ice machine drawer in the cooler compartment.

After placing the full water tank, you can obtain about 60-70 cubes of ice until it is fully empty.

If the water in the tank has waited for 2-3 weeks, it should be changed.

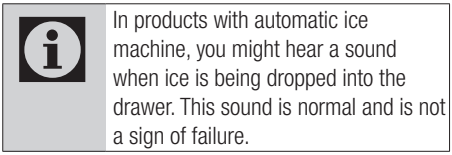

In products with automatic ice machine, you might hear a sound when ice is being dropped into the drawer. This sound is normal and is not a sign of failure.

5.8. Freezing fresh food

- To preserve food quality, the food items placed in the freezer compartment must be frozen as quickly as possible, use the rapid freezing for this.
- Freezing the food items when fresh will extend the storage time in the freezer compartment.
- Pack the food items in air-tight packs and seal tightly.
- Make sure the food items are packed before putting in the freezer. Use freezer holders, tinfoil and damp-proof paper, plastic bag or similar packaging materials instead of traditional packaging paper.



Ice in the freezing compartment thaws automatically.

- Mark each food pack by writing the date on the package before freezing. This will allow you to determine the freshness of each pack every time the freezer is opened. Keep the earlier food items in the front to ensure they are used first.
- Frozen food items must be used immediately after defrosting and should not be frozen again.
- Do not free large quantities of food at once.

5.9. Recommendations for storing frozen foods

The compartment must be set to at least -18°C.

1. Place the food items in the freezer as quickly as possible to avoid defrosting.
2. Before freezing, check the “Expiration Date” on the package to make sure it is not expired.
3. Make sure the food’s packaging is not damaged.

5.10.Deep freezer details

Food items can only be preserved for extended periods at or below temperature of -18°C . You can keep the foods safely frozen for months (in deep freezer at or below temperatures of -18℃).

The food items to be frozen must not contact the already-frozen food inside to avoid partial defrosting.

Boil the vegetables and drain the water to extend the frozen storage time. Place the food in air-tight packages after filtering and place in the freezer. Bananas, tomatoes, lettuce, celery, boiled eggs, potatoes and similar food items should not be frozen. In case this food rots, only nutritional values and eating qualities will be negatively affected. A threat to human health is not in question.

5.11.Placing the food

Freezer compartment shelves	Various frozen goods including meat, fish, ice cream, vegetables etc.
Cooler compartment shelves	Food items inside pots, capped plate and capped cases, eggs (in capped case)
Cooler compartment door shelves	Small and packaged food or beverages
Vegetable bin	Fruits and vegetables
Fresh food compartment	Delicatessen (breakfast food, meat products to be consumed in short notice)

5.12.Door open alert

(Optional)

An audible alert will be heard if the product's door remains open for at least 1 minute. The audible alert will stop when the door is closed or any button on the display (if available) is pressed.

Door open alert is indicated to the user both audibly and visually. Interior lighting will turn off if the warning continues for 10 min.

5.13.Changing the opening direction of the door

You can change the direction of opening of your refrigerator depending on the location where you use it. When you need this, consult the closest Authorized Service.

The explanation above is a general statement. You should check the warning tag located inside the product package about the changeability of direction of the door.

5.14.Interior light

Interior light uses a LED type lamp. Contact the authorized service for any problems with this lamp.

Lamp(s) used in this appliance cannot be used for house lighting. Intended use of this lamp is to help the user place food into the refrigerator / freezer safely and comfortably.

6 Maintenance and cleaning

Service life of the product is increased if it is regularly cleaned



WARNING: First unplug the product before cleaning your refrigerator.

- Never use any sharp and abrasive tools, soap, household cleaners, detergent and wax polish for cleaning.
- Dissolve one teaspoon of baking soda in half liter of water. Soak a cloth with the solution and wring it out thoroughly. Wipe the interior of the appliance with this cloth and then dry thoroughly.
- Make sure that no water enters the lamp housing and other electrical items.
- Clean the door with a damp cloth. To remove door and body shelves, remove all of its contents. Remove door shelves by moving them upwards. After cleaning, slide them from top to bottom to install.
- Never use cleaning agents or water that contain chlorine to clean the outer surfaces and chromium coated parts of the product. Chlorine causes corrosion on such metal surfaces.
- Use only lukewarm water and a soft cloth to remove fingerprints from plastic parts. Wipe dry.

6.1. Avoiding bad odors

Materials that may cause odor are not used in the production of our appliances. However, due to inappropriate food preserving conditions and not cleaning the inner surface of the appliance as required can bring forth the problem of odor.

Therefore, clean the refrigerator with baking soda dissolved in water every 15 days.

- Keep the food in closed containers. Microorganisms spreading out from uncovered containers can cause unpleasant odors.
- Never keep food that has passed its expiration date and spoiled in the refrigerator.

6.2. Protecting the plastic surfaces

Clean with warm water immediately as the oil may cause damage when left in contact with plastic surfaces.

6.3. Door Glass

Remove the protective film on the glass.

There is a coating on the surface of the glass.This coating minimizes the stain build-up and helps to remove the possible stains and dirt easily.

Glass that is not protected with such a coating may be subject to persistent binding of air or water based organic or inorganic dirt such as limescale, mineral salts, unburned hydrocarbons, metal oxides and silicones that can easily and quickly cause stains or material damage. Keeping the glass clean becomes too difficult despite the regular cleaning. Consequently, the appearance and the transparency of the glass deteriorates. Harsh and corrosive cleaning methods and compounds will intensify these defects and speed up the deterioration process.

Water-based cleaning products that are not alkaline and corrosive must be used for regular cleaning purposes.

Non-alkaline and non-corrosive materials must be used for cleaning so that the service life of this coating lasts for a long time.

These panes of glass are tempered to increase their durability against impacts and breaking.

A safety film is also applied to their rear surfaces as an extra safety measure in order to prevent them from causing damage to their surrounding in case of a breakage.

7 Troubleshooting

Check this list before contacting the service. Doing so will save you time and money. This list includes frequent complaints that are not related to faulty workmanship or materials. Certain features mentioned herein may not apply to your product.

The refrigerator is not working.

- The power plug is not fully settled. >>> Plug it in to settle completely into the socket.
- The fuse connected to the socket powering the product or the main fuse is blown. >>> Check the fuses.

Condensation on the side wall of the cooler compartment (MULTI ZONE, COOL, CONTROL and FLEXI ZONE).

- The environment is too cold. >>> Do not install the product in environments with temperatures below -5°C.
- The door is opened too frequently >>> Take care not to open the product's door too frequently.
- The environment is too humid. >>> Do not install the product in humid environments.
- Foods containing liquids are kept in unsealed holders. >>> Keep the foods containing liquids in sealed holders.
- The product's door is left open. >>> Do not keep the product's door open for long periods.
- The thermostat is set to too low temperature. >>> Set the thermostat to appropriate temperature.

Compressor is not working.

- In case of sudden power failure or pulling the power plug out and putting back in, the gas pressure in the product's cooling system is not balanced, which triggers the compressor thermic safeguard. The product will restart after approximately 6 minutes. If the product does not restart after this period, contact the service.
- Defrosting is active. >>> This is normal for a fully-automatic defrosting product. The defrosting is carried out periodically.
- The product is not plugged in. >>> Make sure the power cord is plugged in.
- The temperature setting is incorrect. >>> Select the appropriate temperature setting.
- The power is out. >>> The product will continue to operate normally once the power is restored.

The refrigerator's operating noise is increasing while in use.

- The product's operating performance may vary depending on the ambient temperature variations. This is normal and not a malfunction.

The refrigerator runs too often or for too long.

- The new product may be larger than the previous one. Larger products will run for longer periods.
- The room temperature may be high. >>> The product will normally run for long periods in higher room temperature.
- The product may have been recently plugged in or a new food item is placed inside. >>> The product will take longer to reach the set temperature when recently plugged in or a new food item is placed inside. This is normal.
- Large quantities of hot food may have been recently placed into the product. >>> Do not place hot food into the product.
- The doors were opened frequently or kept open for long periods. >>> The warm air moving inside will cause the product to run longer. Do not open the doors too frequently.
- The freezer or cooler door may be ajar. >>> Check that the doors are fully closed.
- The product may be set to temperature too low. >>> Set the temperature to a higher degree and wait for the product to reach the adjusted temperature.
- The cooler or freezer door gasket may be dirty, worn out, broken or not properly settled. >>> Clean or replace the gasket. Damaged / torn door gasket will cause the product to run for longer periods to preserve the current temperature.

Troubleshooting

The freezer temperature is very low, but the cooler temperature is adequate.

- The freezer compartment temperature is set to a very low degree. >>> Set the freezer compartment temperature to a higher degree and check again.

The cooler temperature is very low, but the freezer temperature is adequate.

- The cooler compartment temperature is set to a very low degree. >>> Set the freezer compartment temperature to a higher degree and check again.

The food items kept in cooler compartment drawers are frozen.

- The cooler compartment temperature is set to a very low degree. >>> Set the freezer compartment temperature to a higher degree and check again.

The temperature in the cooler or the freezer is too high.

- The cooler compartment temperature is set to a very high degree. >>> Temperature setting of the cooler compartment has an effect on the temperature in the freezer compartment. Wait until the temperature of relevant parts reaches the sufficient level by changing the temperature of cooler or freezer compartments.
- The doors were opened frequently or kept open for long periods. >>> Do not open the doors too frequently.
- The door may be ajar. >>> Fully close the door.
- The product may have been recently plugged in or a new food item is placed inside. >>> This is normal. The product will take longer to reach the set temperature when recently plugged in or a new food item is placed inside.
- Large quantities of hot food may have been recently placed into the product. >>> Do not place hot food into the product.

Shaking or noise.

- The ground is not level or durable. >>> If the product is shaking when moved slowly, adjust the stands to balance the product. Also make sure the ground is sufficiently durable to bear the product.
- Any items placed on the product may cause noise. >>> Remove any items placed on the product.

The product is making noise of liquid flowing, spraying etc.

- The product's operating principles involve liquid and gas flows. >>> This is normal and not a malfunction.

There is sound of wind blowing coming from the product.

- The product uses a fan for the cooling process. This is normal and not a malfunction.

There is condensation on the product's internal walls.

- Hot or humid weather will increase icing and condensation. This is normal and not a malfunction.
- The doors were opened frequently or kept open for long periods. >>> Do not open the doors too frequently; if open, close the door.
- The door may be ajar. >>> Fully close the door.

There is condensation on the product's exterior or between the doors.

- The ambient weather may be humid, this is quite normal in humid weather. >>> The condensation will dissipate when the humidity is reduced.

The interior smells bad.

Troubleshooting

- The product is not cleaned regularly. >>> Clean the interior regularly using sponge, warm water and baking soda.
- Certain holders and packaging materials may cause odour. >>> Use holders and packaging materials that are free of odour.
- The foods were placed in unsealed holders. >>> Keep the foods in sealed holders. Micro-organisms may spread out of unsealed food items and cause odors. Remove any expired or spoilt foods from the product.

The door is not closing.

- Food packages may be blocking the door. >>> Relocate any items blocking the doors.
- The product is not standing in full upright position on the ground. >>> Adjust the stands to balance the product.
- The ground is not level or durable. >>> Make sure the ground is level and sufficiently durable to bear the product.

The vegetable bin is jammed.

- The food items may be in contact with the upper section of the drawer. >>> Reorganize the food items in the drawer.



WARNING: If the problem persists after following the instructions in this section, contact your vendor or an Authorised Service. Do not try to repair the product.

LIMITED WARRANTY

ONE-YEAR LIMITED WARRANTY

Within the 48 contiguous United States, for one year from the date of purchase, when this appliance is operated and maintained according to instructions attached to or furnished with the product, warrantor will pay for factory-specified parts and repair labor to correct defects in materials or workmanship. Service must be provided by a designated service company. Outside the 48 states, all parts are warranted for one year from manufacturing defects. Plastic parts, shelves and cabinets are warranted to be manufactured to commercially acceptable standards, and are not covered from damage during handling or breakage.

5-YEARS COMPRESSOR WARRANTY

1. The compressor is covered for 5 years.
2. Replacement does not include labor.

ITEMS WARRANTOR WILL NOT PAY FOR:

1. Service calls to correct the installation of your appliance, to instruct you how to use your appliance, to replace or repair fuses or to correct wiring or plumbing.
2. Service calls to repair or replace appliance light bulbs or broken shelves. Consumable parts (such as filters) are excluded from warranty coverage.
3. Damage resulting from accident, alteration, misuse, abuse, fire, flood, acts of God, improper installation, installation not in accordance with electrical or plumbing codes, or use of products not approved by warrantor.
4. Replacement parts or repair labor costs for units operated outside the United States.
5. Repairs to parts or systems resulting from unauthorized modifications made to the appliance.
6. Expenses for travel and transportation for product service in remote locations.
7. The removal and reinstallation of your appliance if it is installed in an inaccessible location or is not installed in accordance with published installation instructions.

DISCLAIMER OF IMPLIED WARRANTIES – LIMITATION OF REMEDIES

CUSTOMER'S SOLE AND EXCLUSIVE REMEDY UNDER THIS LIMITED WARRANTY SHALL BE PRODUCT REPAIR AS PROVIDED HEREIN. IMPLIED WARRANTIES, INCLUDING WARRANTIES OF MERCHANTABILITY OR FITNESS FOR A PARTICULAR PURPOSE, ARE LIMITED TO ONE YEAR. WARRANTOR SHALL NOT BE LIABLE FOR INCIDENTAL OR CONSEQUENTIAL DAMAGES. SOME STATES DO NOT ALLOW THE EXCLUSION OR LIMITATION OF INCIDENTAL OR CONSEQUENTIAL DAMAGES, OR LIMITATIONS ON THE DURATION OF IMPLIED WARRANTIES OF MERCHANTABILITY OR FITNESS, SO THESE EXCLUSIONS OR LIMITATIONS MAY NOT APPLY TO YOU. THIS WARRANTY GIVES YOU SPECIFIC LEGAL RIGHTS AND YOU MAY ALSO HAVE OTHER RIGHTS, WHICH VARY FROM STATE TO STATE.

WARNING! This product may contain chemicals known to the state of California to cause cancer or birth defects or other reproductive harm. For more information, visit: www.summitappliance.com/prop65

Chemicals known by the manufacturer to be present in this product in concentrations higher than threshold limits: NONE.

FELIX STORCH, INC.
770 Garrison Avenue
Bronx, NY 10474
Phone: (718) 893-3900
Fax: (844) 478-8799
www.summitappliance.com

SUMMIT

For parts and accessory ordering, troubleshooting and helpful hints, visit:
www.summitappliance.com/support

Printed in Turkey

57 7701 0000/AB
EN