DOMETIC

OPERATING INSTRUCTIONS

RM2351 RM2454 DM2652 DM2852
RM2354 RM2551 DM2662 DM2862
RM2451 RM2554 DM2663 NDM1062

⚠ WARNING

FIRE OR EXPLOSION HAZARD

If you smell gas:
1. Open windows.
2. Do not attempt to light appliance.
3. Do not touch electrical switches.
4. Extinguish any open flame.
5. Shut off fuel supply.
6. Evacuate immediately and call emergency services.

Failure to follow these instructions could result in fire or explosion, which could cause property damage, personal injury, or death.

FOR YOUR SAFETY

Do not store or use gasoline or other flammable vapors and liquids in the vicinity of this or any other appliance.

⚠ WARNING

Improper installation, adjustment, alteration, service or maintenance can cause injury or property damage. Refer to this manual. For assistance or additional information consult a qualified installer, service agency or the gas supplier.

⚠ WARNING

If the refrigerator stops cooling - or - if it emits an ammonia smell, immediately turn the refrigerator off and contact a Service Center.

REVISION D
Form No. 3313240.016 12/17
(French 3313241.013_D)
©2017 Dometic Corporation
LaGrange, IN 46761

USA & CANADA
SERVICE OFFICE
Dometic Corporation
1120 North Main Street
Elkhart, IN 46514

SERVICE CENTER & DEALER LOCATIONS
Please Visit:
www.dometic.com

INTRODUCTION

Thank you for purchasing a new Dometic refrigerator. This product is a recreational vehicle refrigerator intended for the storage of fresh and frozen foods, as well as making ice.

Appearance of your product may vary from illustrations shown in this document.

Please read and be aware of possible safety hazards identified in this manual, and become familiar with the alert symbols on the refrigerator. Read this manual carefully so that you know how to operate the refrigerator safely and correctly. Keep this manual with the refrigerator for future reference.

CONTENTS

REFRIGERATOR OVERVIEW 3
INSTRUCTIONS FOR USE. 6
STORAGE COMPARTMENTS 9
PRODUCT CARE 10
MAINTENANCE & SERVICE 12
TROUBLESHOOTING 14
APPENDIX A - SPARE PARTS 15
APPENDIX B - REARVIEW EQUIPMENT 17
APPENDIX C - WIRING DIAGRAM 19
APPENDIX D - CONSUMER SUPPORT 24
APPENDIX E - DOMETIC WARRANTY 25
APPENDIX F - MAINTENANCE SCHEDULE 26

SYMBOLS

The following symbols are used throughout this manual:



This is the safety alert symbol. It is used to alert you to personal injury hazards. Obey all safety messages that follow this symbol to avoid possible injury or death.

⚠ WARNING WARNING indicates a hazardous situation which, if not avoided, could result in death or serious injury.

⚠ CAUTION CAUTION, used with the safety alert symbol, indicates a hazardous situation which, if not avoided, could result in minor or moderate injury.

NOTICE NOTICE is used to address practices not related to personal injury.



Information



Step-by-step instructions

REFRIGERATOR OVERVIEW

ABSORPTION COOLING SYSTEM

When turning on the refrigerator, you should adjust the thermostat (excludes RM2351, RM2451, RM2551, DM2652 & DM2852 - not adjustable) to the coldest temperature setting. The cooling cycle may require an extended running time before cooling effect is observed.

LEVELING THE REFRIGERATOR

Leveling is one of the requirements for proper operation with absorption refrigerators. To ensure proper leveling the vehicle needs to be leveled so it is comfortable to live in (no noticeable sloping of floor or walls).

Any time the vehicle is parked for several hours with the refrigerator operating, the vehicle should be leveled to allow proper cooling.

When the vehicle is moving, the leveling is not critical, as the rolling and pitching movement of the vehicle will pass to either side of level, keeping the liquid ammonia from accumulating in the evaporator tubing.

OPERATING REFRIGERATOR AT HIGH ALTITUDE

All gas appliances experience lowered efficiency (or rating) at high altitude This is a direct result of lower atmospheric pressure and oxygen levels, and is not a defect of the refrigerator.

Reduced cooling performance and burner outage may occur at altitudes higher than 5500 feet above sea level (while operating on LP gas). Always operate refrigerator on electric power at altitudes higher than 5500 feet.

PURGING AIR FROM THE LINES

If the refrigerator has not been used for a long time - or - the LP tanks have just been refilled, air may be trapped in the supply lines. To purge the air from the lines, turn the refrigerator off and on by pressing the ON/OFF button. If the flame is not lit within 45 seconds, turn the refrigerator off and back on again. This procedure can be repeated 3 to 4 times. If repeated attempts fail to start the LP gas operation, check to make sure that the LP gas supply tanks are not empty and that all manual shutoff valves in the lines are open. If the problem persists, turn the refrigerator off and take it to a Service Center.

WHEN THE REFRIGERATOR IS NOT IN USE

Any absorption refrigerator that is to be taken out of service for an extended period of time should be turned off.

It is important that you do not leave the refrigerator to run idle and/or unattended for days or weeks.

AUTOMATIC ENERGY SELECTOR SYSTEM

The refrigerator is equipped with an automatic energy selector system. The user turns the refrigerator on and then, the refrigerator automatically selects the most suitable energy source available, either 120 VAC or LP gas operation. The system can be set by the user to be fully automatic (AUTO mode is selected) or to operate on LP gas only (AUTO mode is off).

On 3-way models, the control system can manually be set to DC mode (DC operation). The DC mode overrides all other operating modes.

The refrigerator controls will work down to 9.6 VDC.

REFRIGERATOR OVERVIEW

CONTROL PANEL

RM2351, RM2451, RM2551, DM2652 & DM2852

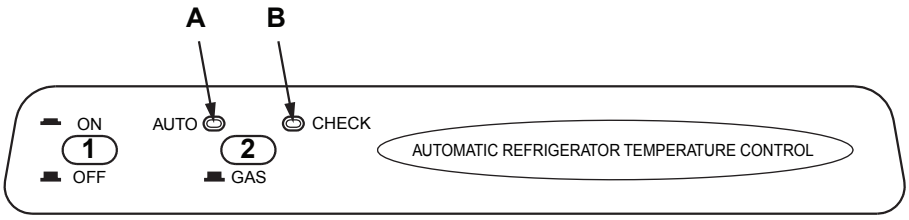

1. **ON/OFF** button (main power)
2. **AUTO/GAS** mode selector button

A. **AUTO** mode indicator lamp
B. **CHECK** indicator lamp (GAS mode only)

RM2354, RM2454, RM2554 & DM2663

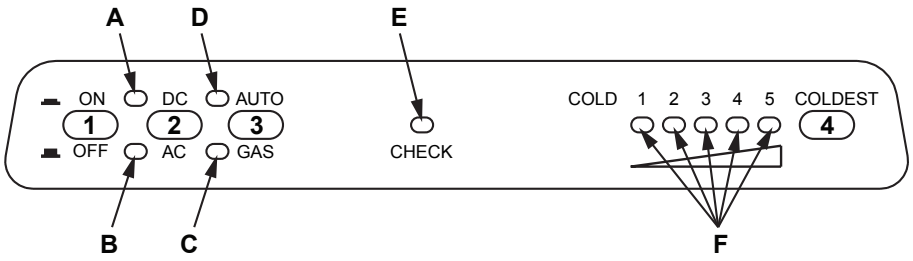

1. **ON/OFF** button (main power)
2. **DC** mode selector button
3. **AUTO/GAS** mode selector button
4. **Temperature** selector button

A. **DC** mode indicator lamp
B. **AC** mode indicator lamp
C. **GAS** mode indicator lamp
D. **AUTO** mode indicator lamp
E. **CHECK** indicator lamp (GAS mode only)
F. **Temperature** indicator lamps

DM2662, DM2862 & NDM1062

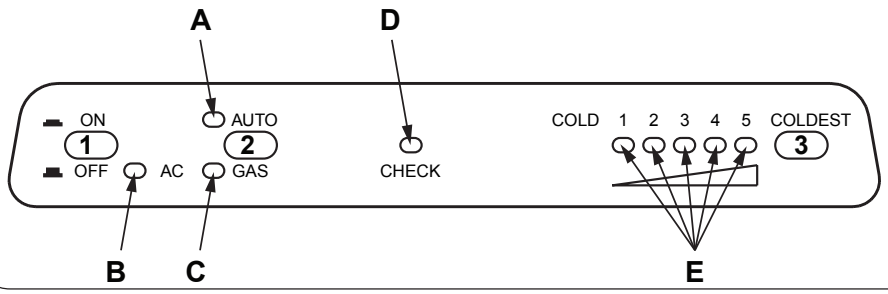

1. **ON/OFF** button (main power)
2. **AUTO/GAS** mode selector button
3. **Temperature** selector button

A. **AUTO** mode indicator lamp
B. **AC** mode indicator lamp
C. **GAS** mode indicator lamp
D. **CHECK** indicator lamp
E. **Temperature** indicator lamps

NDM1062

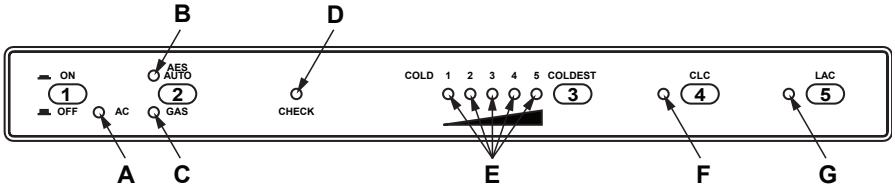

1. **ON/OFF** button (main power)
2. **AES/AUTO/GAS** mode selector button
3. **Temperature** selector button
4. **Climate control** button
5. **Low ambient control** button

A. **AC** mode indicator lamp
B. **AES/AUTO** mode indicator lamp
C. **GAS** mode indicator lamp
D. **CHECK** indicator lamp
E. **Temperature** indicator lamps
F. **Climate control** indicator lamp
G. **Low ambient control** indicator lamp

REFRIGERATOR OVERVIEW

MODES OF OPERATION

AUTO MODE - AES/AUTO MODE

When operating in AUTO - AES/AUTO mode, the AUTO - AES/AUTO mode indicator lamp is illuminated. The control system will automatically select between AC and GAS operation. AC has priority over GAS. Should AC become unavailable, the system automatically switches to GAS.

As soon as AC becomes available again, the control will switch back to AC regardless of the status of the GAS operation.

If the CHECK indicator lamp is illuminated the controls have failed to ignite the burner in the GAS mode. To restart an ignition attempt with the CHECK lamp illuminated (or to turn off the CHECK lamp), press the ON/OFF button OFF and back ON again. The control system activates the ignition system and makes three attempts to light the burner for a period of approximately 45 seconds at two minutes interval. Should 120 VAC become available while the CHECK indicator lamp is on, the CHECK lamp will *not* turn off until the ON/OFF button is pressed OFF and then ON again.

GAS MODE

RM2351, RM2451, RM2551, DM2652 & DM2852:

When operating in GAS mode, the AUTO mode indicator lamp will be off.

RM2354, RM2454, RM2554, DM2662, DM2663, DM2862 & NDM1062: When operating in GAS mode, the GAS Mode indictor lamp is illuminated.

This mode provides LP gas only. The control system activates the ignition system and attempts to light the burner for a period of approximately 45 seconds at two minutes interval. If unsuccessful, the CHECK indicator lamp will illuminate.

To restart GAS operation, press the ON/OFF button to OFF and then back ON. The control system attempts a new ignition sequence.

DC MODE

RM2354, RM2454, RM2554 & DM2663

When operating in DC mode (3-way models only), the DC mode indicator lamp is illuminated and all other lamps are off. To select another operating mode, turn off the DC mode by pressing the DC selector button. The DC lamp is turned off.

When there is no charging of the house battery, switch to AUTO mode or GAS mode since running the refrigerator on 12 VDC will quickly drain the battery.

LIMP MODE OF OPERATION

In the event of a failure of a major operating component, the control system will continue to operate the cooling system.

RM2351, RM2451, RM2551, DM2652 & DM2852

If the control can not read the temperature sensor and control the preset temperature, the control will run the cooling unit continuously at the energy source available. The refrigerator will continue to operate in this mode indefinitely - or - until a new sensor is installed and the system reset.

RM2354, RM2454, RM2554, DM2662, DM2663, DM2862 & NDM1062

Two modes of operation can occur:

1) The first limp mode of operation will execute if the display module becomes non functional. The control system reverts to full automatic operation selecting the best energy source available with AC, DC (3-way only) and GAS priority. The temperature setting is maintained at the mid position. The power module will continually attempt to reestablish operation of the display module.
2) The second limp mode of operation will execute when a failure of the temperature sensing device or associated electronic circuitry occurs. If this should happen, the control system operates on the energy source selected via the control panel. The cooling unit runs continuously on the selected energy source. The refrigerator continues to operate in this mode indefinitely or until a new sensor is installed and the system is reset.

INSTRUCTIONS FOR USE

STARTING THE REFRIGERATOR

⚠ WARNING

FIRE HAZARD. When the RV has not been used for some time, make sure that the path between the burner jet and the burner tube has not been obstructed before lighting the LP gas burner. Failure to obey this warning could cause a fire resulting in death or serious injury.

⚠ WARNING

FIRE OR EXPLOSION HAZARD. When refueling or parked near gasoline pumps shut off all LP gas appliances. Failure to obey this warning could cause a fire or explosion resulting in death or serious injury

LP GAS EQUIPMENT ASSEMBLY

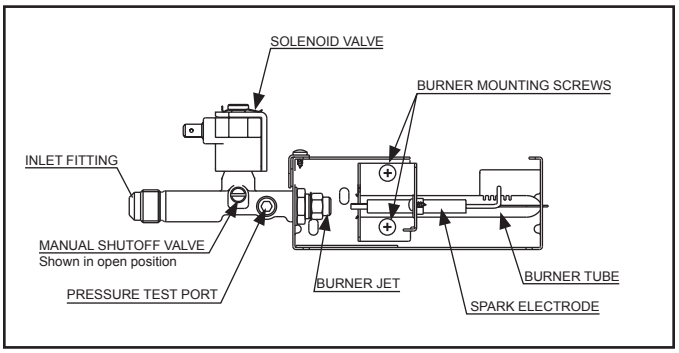

1. Check that all the manual gas valves are in the ON position.
2. Make sure that a continuous 12 VDC supply is available for the electronic control to function.
3. Press the ON/OFF button.
4. Select operation mode:
   - **AUTO - AES/AUTO mode** (AC and Gas)
     Press the AUTO/GAS - AES/AUTO/Gas mode selector button (if not already on). The illuminated lamp indicates the selected mode.
     (If the CHECK indicator lamp is illuminated, see REFRIGERATOR OVERVIEW > MODES OF OPERATION > AUTO MODE - AES/AUTO MODE for further information.)
   - **GAS mode** (LP gas operation only)
     Press the AUTO/GAS - AES/AUTO/Gas mode selector button to turn off the AUTO mode (if not already off).
     (Within 45 seconds the burner should be ignited and operating normally. If not, see REFRIGERATOR OVERVIEW > MODES OF OPERATION > GAS MODE for further information.)
   - **DC mode** (3-way models only)
     Press the DC mode indicator button. The DC lamp will be turned on. To select AUTO or GAS mode, turn off the DC mode by pressing the DC mode selector button. The DC lamp will then be turned off.

ADJUSTING THE THERMOSTAT

RM2354, RM2454, RM2554, DM2662, DM2663, DM2862 & NDM1062

The thermostat controls both the gas and electric operation, thereby eliminating the necessity of resetting each time a different energy source is employed. After the initial start-up, the thermostat should be adjusted to the desired temperature setting.

1. Press the temperature selector button until the lamp at the desired setting is illuminated.

RM2351, RM2451, RM2551, DM2652 & DM2852

The temperature is controlled by a factory preset temperature setting.

COLD WEATHER LOW AMBIENT CONTROL

NDM1062

The refrigerator is equipped with an exclusive feature that allows for trouble-free operation in low ambient temperature (like below 50°F) for extended periods of time. Once the outdoor temperature is above 50°F, the low ambient switch should be turned off.

1. Turn the Low ambient control switch to I (ON).

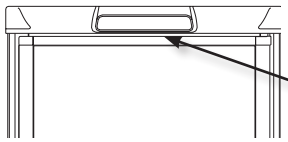

The Low ambient control switch is located beneath the top decoration panel that houses the control panel.

2. Press the LAC button. The indicator lamp will illuminate.

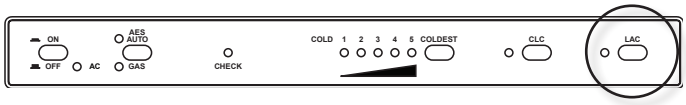

INSTRUCTIONS FOR USE

EXTREME COLD WEATHER OPERATION

Refrigerator performance may be reduced in extremely cold (subzero) temperatures. This temporary condition is normal for absorption refrigerators and does not indicate product failure. In the event that performance is reduced in such conditions, turn the refrigerator off. As ambient temperatures rise, please restart your refrigerator according to instructions before requesting service.

CLIMATE CONTROL SYSTEM

NDM1062

During the summer months of high temperature and humidity, the metal frame between the freezer and fresh food compartments may have water droplets forming. The number of water droplets will increase if the vehicle is not air conditioned during these months. The refrigerator comes standard with a 12 VDC climate control that will evaporate the water droplets when they form. The climate control can be left on continuously or used only when temperatures require it. Note that when turned on, the climate control will draw 12 VDC power continuously. Turn it off when a charging source is not available.

1. Turn the climate control switch to I (ON).

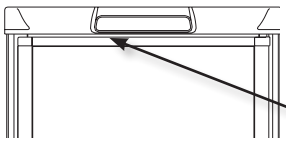

The Climate control switch is located beneath the top decoration panel that houses the control panel.

2. Press the CLC button. The indicator lamp will illuminate.

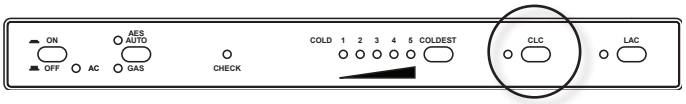

OPERATING THE ICE MAKER

(ICE MAKER MODELS ONLY)

Before the ice maker can operate, make sure that:

- The refrigerator is connected to 120 VAC .
- The water valve supplying the refrigerator is turned on.
- The ice level bail arm is in its fully down position.

Keep bail arm in the up (OFF) position until water is present at the ice maker.

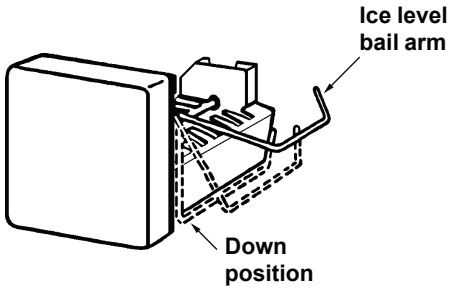

When the ice maker thermostat senses the preset temperature for the ejection of the ice cubes, the fingers will start to rotate, dumping any ice cubes and filling the mold with water. When the storage container is full, the bail arm will come in contact with the ice cubes. The bail arm cannot return to the full down position and the ice production is stopped until the bin is emptied, or ice cubes are removed.

To prevent water from splashing out of the mold assembly while travelling in your recreational vehicle, raise the bail arm to the full UP/OFF position about 1-1/2 hours before departing. This will allow the water in the mold to freeze.

WATER SUPPLY

The water supply system must have a minimum pressure of 15 pounds per square inch gauge (psig). A 1/4” diameter water line to the water valve should be used at the rear of the refrigerator. The water line must have a manual shutoff valve placed where it is easily accessible.

The maximum water level is represented by a thin line. It is essential that the water level does not exceed this line!

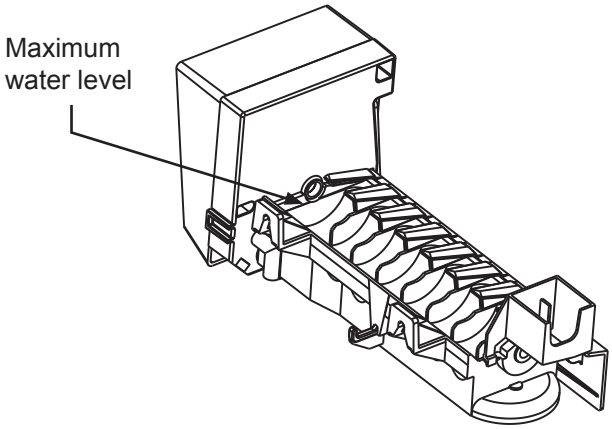

If necessary,change the water flow by adjusting the water supply. For instructions, see ADJUSTING THE SIZE OF CUBES.

INSTRUCTIONS FOR USE

ADJUSTING THE SIZE OF CUBES

If the ice maker was cleaned and drained, no ice cubes will be dumped into the bin during the first cycle.

The first few cycles may have small cubes due to air trapped in the water lines. The first container of ice cubes should be dumped if the water system has been winterized or not used for several weeks. Once the ice maker has run through several cycles and if cubes are too small or sticking together, adjustment is necessary on the amount of water entering the mold.

TO ADJUST THE SIZE OF CUBES, FOLLOW THESE STEPS:

1. Remove the protective cover from the ice maker mechanism. Using a flat-head screwdriver, place the tip of the screwdriver in the slot. Twist the screwdriver blade gently to loosen the cover.

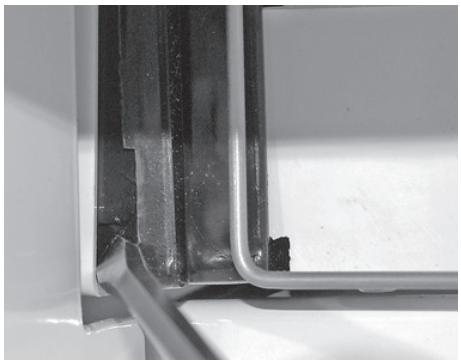

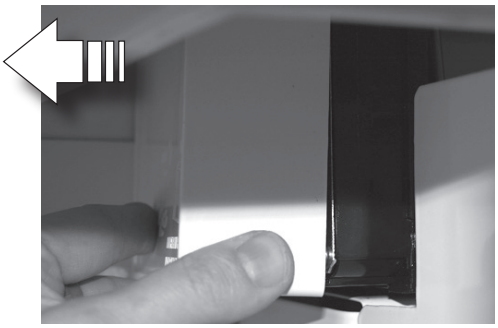

2. Locate the adjusting screw under the protective cover. Turn the screw counterclockwise to increase the size of cubes.

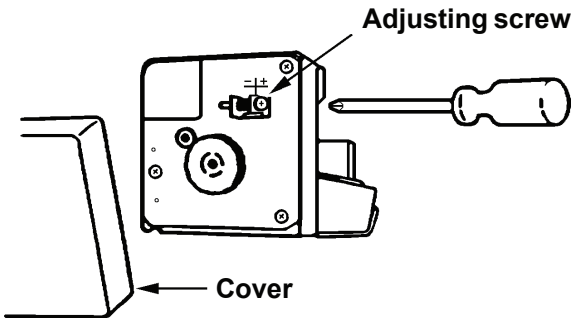

3. Turn the screw clockwise to decrease the cube size or if the mold is overfilling, and the cubes are stuck together.

To prevent overfilling, do not turn the adjustment screw more than one revolution at a time. Allow the ice maker to cycle several times before another adjustment is made. Be sure to replace the protective cover on the cycle after the adjustments are complete.

TURNING OFF THE REFRIGERATOR, AND WHEN NOT IN USE

You can turn off your refrigerator by pressing the main power ON/OFF button found on the control panel to the OFF position. This will shut off all power to the refrigerator, including DC power to the refrigerator.

If the refrigerator will not be in operation for an extended period of time or put into winter storage it should be emptied, defrosted, cleaned, and the doors placed in the airing position. If ice cube trays are in use, they should also be dried and kept outside the cabinet.

NOTICE

This refrigerator is intended for continuous use. Do not allow it to run unattended when there is a risk for loss of electricity or fuel. Food spoilage could occur.

The refrigerator's control system still consumes a few milliamps even if it is turned off. If your RV is being put into winter storage, it is recommended to either put your RV batteries on a battery charger or turn off the vehicle's main 12 VDC switch. This will prevent the RV battery from discharging.

STORAGE COMPARTMENTS

⚠ WARNING

FIRE OR EXPLOSION HAZARD. Do not store or use gasoline, oil or gasoline soaked rags, or other flammable vapors and liquids in the service area behind the refrigerator or in the vicinity of this or any other gas appliance. Failure to obey this warning could cause a fire or an explosion resulting in death or serious injury.

REFRIGERATOR VOLUME

MODEL	TOTAL REFRIGERATED VOLUME (CU. FT.)
RM2351& RM2354	3
RM2451& RM2454	4
RM2551 & RM2554	5
DM2652, DM2662 & DM2663	6
DM2852 & DM2862	8
NDM1062	9.2

FOOD STORAGE COMPARTMENT

- Cool the refrigerator before placing any food inside. Never put hot food or drinks into the refrigerator - cool them first.
- The food storage compartment is completely closed and unventilated, which is necessary to maintain the required low temperature for food storage. Consequently, foods having a strong odor or those that absorb odors easily should be covered.
- Vegetables, salads, etc. should be covered to retain their crispness.
- The coldest positions in the refrigerator are under the cooling fins and at the bottom of the refrigerator. The warmer areas are on the upper door shelves. This should be considered when placing different types of food in the refrigerator.
- Arrange all food in the unit to allow for free air circulation. Do not overpack because a stuffed refrigerator must work harder and will have higher cabinet temperatures.
- Do not leave the unit's door open any longer than necessary. This will reduce frost formation and increase the efficiency of the refrigerator.

FROZEN FOOD STORAGE COMPARTMENT

This compartment is not designed for deep or quick freezing of food.

- To prevent food from drying out, keep it in covered dishes, containers, plastic bags or wrapped in aluminum foil.
- Meat or fish, whether raw or prepared, can be stored in the frozen food storage compartment provided they are precooled first in the refrigerator. They can be stored about three times longer in the frozen food compartment as compared to the fresh food compartment.
- Quick frozen soft fruits and ice cream should be placed in the coldest part of the compartment, which is at the bottom of the aluminum liner.
- Frozen vegetables, may be stored in any part of the compartment.
- To prevent frost buildup, which can reduce the efficiency, wipe excess moisture off items being placed in the compartment.

REMOVING AND REPLACING THE SHELVES

1. Remove the shelf locks by inserting the tip of a flat bladed screwdriver into the slot of the locks. Turn the screwdriver counterclockwise and then remove the shelf locks from the wire shelf.

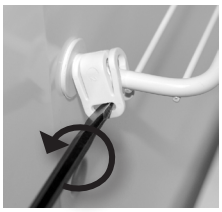

2. Slide the shelf to the left until bushings disengage, then tilt the shelf to one side at an angle while pulling forward.

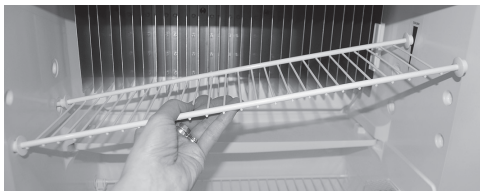

3. Reposition the shelf in the desired location. Insert the ends of the wire shelf on the left-hand side and slide the shelf into the holes on the right-hand side.
4. Slide the plastic plugs into the holes of the wall.
5. Snap the shelf locks back onto the wire shelf.



STORAGE COMPARTMENTS

ICE CUBES

Ice cubes can be made in the freezer compartment. For faster freezing, place trays in direct contact with the bottom of the freezer compartment.

RM2351, RM2454, RM2554, DM2662, DM2663, DM2862 & NDM1062

Ice will be made more rapidly if the thermostat is set at its highest position, but be sure to move the thermostat back to normal setting when ice is formed; the refrigerator might otherwise become too cold.

PRODUCT CARE

DEFROSTING

1. Shut off the refrigerator by pressing the main power ON/OFF button (OFF position).
2. Empty the refrigerator.
3. Leave the cabinet and freezer doors open and make sure the drip tray is in place under the finned evaporator.

Defrosting time can be reduced by filling ice trays with hot water and placing them in the freezer compartment.

⚠ WARNING

FIRE AND INHALATION HAZARD. Do not use a knife, ice pick, or any other sharp tool to remove frost from the freezer compartment. Failure to obey this warning could cause a leak in the ammonia cooling system which could lead to a fire hazard resulting in death or serious injury.

An ammonia leak also poses an inhalation hazard, and could cause chemical burns to the skin and eyes. Exposure to a high concentration of ammonia could result in death or serious injury.

NOTICE

Do not use a hot air blower to remove frost from the freezer compartment. Permanent damage could result from warping the metal or plastic parts.

4. When all the frost has melted, dry the interior with a clean cloth and turn the refrigerator back on.

RM2354, RM2454, RM2554, DM2662, DM2663, DM2862 & NDM1062

5. Set the thermostat to the coldest setting for a few hours. Then, reset the thermostat to the desired setting, usually at mid setting. Replace food after refrigerator has reached appropriate cool temperature.

AIRING POSITION

DM2652, DM2662, DM2663, DM2852 & DM2862

Use the airing position card to keep the doors ajar if the refrigerator is put in storage or will not be used for an extended period of time.



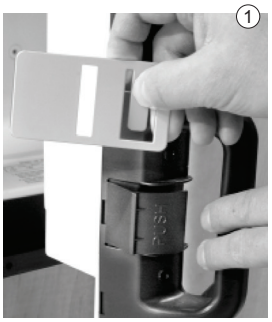

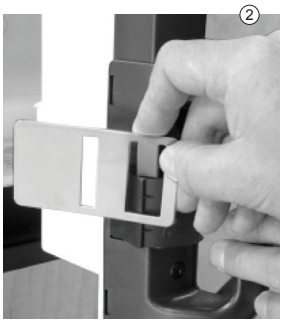







PRODUCT CARE

CLEANING

Always keep the refrigerator clean. Cleaning the refrigerator is usually done after it is defrosted or put into storage. Use a lukewarm, weak soda solution to clean the interior liner of the refrigerator. Use warm water only to clean the finned evaporator, gasket, and shelves. Do not spray liquids near electrical outlets, connections, or the refrigerator components.

After cleaning the interior liner/evaporator fins, make sure thermistor bulb and thermistor bracket are properly positioned. See “Troubleshooting” on page 14.

NOTICE

Do not use strong chemicals or abrasives to clean these parts, as the protective surfaces will be damaged.

To keep the refrigerator operating efficiently, periodic inspection and cleaning of several components once a year is recommended:

- Check the lower vent, upper vent and area between these openings for any obstructions such as bird/insect nests, spider webs, etc.
- Make sure the refrigerator area is free from combustible material, gasoline and other flammable vapors or liquids.

⚠ WARNING

FIRE OR EXPLOSION HAZARD. Do not store or use gasoline, oil or gasoline soaked rags, or other flammable vapors and liquids in the service area behind the refrigerator or in the vicinity of this or any other gas appliance. Failure to obey this warning could cause a fire or an explosion resulting in death or serious injury.

- If accessible, clean the coils on the back of the refrigerator. Use a soft bristled brush to dust off the coils.

STORAGE PROCEDURE/WINTERIZING THE REFRIGERATOR

(ICE MAKER MODELS ONLY)

The refrigerator is equipped with a heater tape wrapped around the water solenoid valve and outlet water tube. During cold weather operation below 32°F/0°C the automatic temperature switch will turn the heater tape on automatically.

If the RV will not be in use for an extended period of time or put into storage:

- Drain the RV water system.
- Disconnect the water lines from the inlet and outlet sides of the water valve. Drain the lines into a cup and allow the lines to dry.
- The ice maker should be drained and dried. Note that this procedure must be performed by a qualified service technician.
- Using a lukewarm soda solution, clean the interior liner of the refrigerator. Clean the finned evaporator and shelves. Use warm water only and never strong chemicals or abrasives since these can damage the protective surfaces.
- Place doors in the airing position.

MAINTENANCE & SERVICE

To keep the refrigerator working properly, a qualified service technician should, at least once a year, inspect the connections, the control system, the LP gas pressure and flue baffle.

⚠ WARNING

FIRE AND INHALATION HAZARD. If the refrigerator stops working -or- if it emits an ammonia smell, immediately turn the refrigerator off, leave the vicinity, and contact a Service Center.

A high concentration of ammonia refrigerant could cause an inhalation hazard, could cause chemical burns to the skin and eyes, and could cause a fire resulting in death or serious injury.

REPLACING THE FUSES

2-way models are equipped with 2 fuses - one for the refrigerator control system and one for the AC heater.

3-way models are equipped with 3 fuses - two fuses in the power module and one in-line blade fuse.

Control system	3 A
AC heater	5 A
12 VDC heater	30 A

REPLACING THE FUSES

POWER MODULE

To replace the fuses, follow these steps:

1. Turn off the refrigerator and unplug the power cord and disconnect the 12V wires.
2. Remove the power module cover.
3. Snap the fuse out of the fuse holder and fit the new fuse in to the fuse holder.
4. Put back the power module cover.

DM2652 (OPTIONAL FAN), DM2852 (OPTIONAL FAN), DM2862 (OPTIONAL FAN) & NDM1062

INLINE FUSE

The inline fuse for the power vent fans is connected to the 12V DC socket.

To replace the inline fuse, follow these steps:

1. Disconnect 12V DC power.
2. Open the fuse holder.



3. Replace the fuse.



4. Put the holder back together.



PERIODIC MAINTENANCE

To be performed by a qualified service technician only.

CHECKING THE LP GAS CONNECTIONS

1. Check all connections in the LP gas system (at the back of the refrigerator) for gas leaks. The LP gas supply must be turned on.
2. Apply an approved leak detection solution to all LP gas connections. The appearance of bubbles indicates a leak and should be repaired immediately!

⚠ WARNING

FIRE OR EXPLOSION HAZARD. Never use an open flame to check for gas leaks. Failure to obey this warning could cause a fire or explosion resulting in death or serious injury.

CHECKING THE CONTROL SYSTEM

Check the control system by connecting/disconnecting the 120 VAC power, starting/stopping the engine, etc.

MAINTENANCE & SERVICE

CLEANING THE BURNER

1. Turn off the refrigerator
2. Unplug the power cord from the 120 VAC outlet. Disconnect the wires or shut off the 12 VDC power supply to the refrigerator.
3. Turn off the manual shut off valve.
4. Remove cover from burner housing.
5. Clean the burner tube with a brush. Blow out the burner with compressed air.

⚠ WARNING

FIRE HAZARD. Never use a wire or pin to clear obstructions from the burner jet as damage will occur. Do not attempt to adjust the burner jet. Failure to obey this warning could cause a fire resulting in death or serious injury.

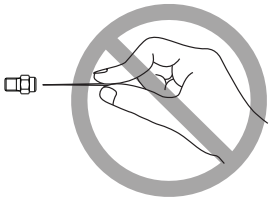

6. Verify that the burner jet slots are centered under the flue tube.
7. Be sure to check the burner flame for proper appearance. The flame should be clear blue over the slots of the burner.

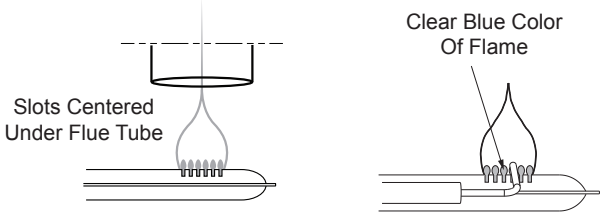

8. Check the electrode for proper location and gap. Adjustments may be made with needle nose pliers if necessary.

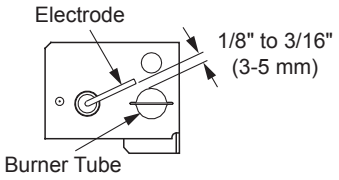

9. Turn on the manual gas shut off valve.
10. Examine all fittings for leaks. Use a commercial non-corrosive bubble solution.
11. Connect the 120 VAC power cord.
12. Reconnect/Turn on the 12 VDC power.
13. Check LP gas safety shutoff.

REFRIGERATOR REMOVAL / DISPOSAL

To be performed by a qualified service technician only.

See Installation Instructions for refrigerator removal / replacement procedure, and for recycle information.

TROUBLESHOOTING

If you run into a problem, refer to the troubleshooting table below.

Symptom	Check/Remedial action
Refrigerator stops cooling.	• Immediately turn the refrigerator off and contact a Dometic dealer or Service Center. NOTE! Do not leave it running for an extended period of time, and never try to solve the problem by repeatedly restarting the refrigerator. • Do not use the refrigerator until it has been repaired
Refrigerator emits an ammonia smell	• Immediately turn the refrigerator off at the front control panel. • Do NOT open refrigerator doors. • Open coach windows and doors (to air out the coach) and evacuate. • Turn off manual LP gas valve at rear of refrigerator. • Disconnect the 120 VAC power at rear of refrigerator. • Contact a Dometic dealer or Service Center for repair. • Do not use the refrigerator until it has been repaired.
Refrigerator or freezer is not cold enough	• For refrigerators equipped with a thermostat, check the thermostat and adjust if necessary. • Is the plug firmly connected to the socket? Is the socket switched on? Check the socket by plugging in another appliance. • Is the refrigerator level? (Due to the nature of its operation it is important to keep an absorption refrigerator level.) • Door closing properly? Check the door gasket. • Heavy frost build-up on evaporator fins? To prevent frost build-up do not leave the unit's door open longer than necessary. • Over packed refrigerator? The unit will have to work harder if the refrigerator is stuffed, and results in higher cabinet temperatures. Arrange the food in the unit to allow for free air circulation.
Refrigerator does not work on electric	• Is the plug firmly connected to the receptacle? Is the receptacle energized? Check the receptacle by plugging in another appliance. • Is there a power failure? • Blown fuse. Turn refrigerator off and contact a Dometic dealer or Service Center for repair.
The refrigerator does not work in gas operation mode	• LP gas bottle empty? Change the gas bottle. • Air in the gas line? Remove the air by repeating the ignition sequence. • If problem resists, turn refrigerator off and contact a Dometic dealer or Service Center for repair.
Refrigerator emits an odor from fumes:	• Dislocated or damaged burner. Turn refrigerator off and contact a Dometic dealer or Service Center for repair. • Dirty flue tube. Turn refrigerator off and contact a Dometic dealer or Service Center for repair.
Refrigerator too cold	• Dislocated thermistor bracket. Clip thermistor bracket to last fin on right side of cooling flange and center vertically on fin. • Dislocated thermistor bulb. Position thermistor bulb inside thermistor bracket groove and center vertically in bracket.

If the problem persists and the refrigerator is still not working properly, turn refrigerator off and contact your nearest Service Center. State the problem, model, product, and serial number. These details are stated on the data label inside the refrigerator compartment.

APPENDIX A - SPARE PARTS

MODEL / SPARE PARTS	RM2351	RM2354	RM2451	RM2454	RM2551	RM2554	DM2652
Airing position card	N/A	N/A	N/A	N/A	N/A	N/A	3312986.403
Baffle	2007172022	2007172022	2932667013	2932667013	2932667021	2932667021	2932667039
Box	2932636018	2932636018	N/A	N/A	N/A	N/A	N/A
Box, vegetable	N/A	N/A	N/A	N/A	2932621010	2932621010	2932621010
Box, vegetable (crisper), 2 pieces	N/A	N/A	N/A	N/A	N/A	N/A	N/A
Box, vegetable (meat locker)	N/A	N/A	N/A	N/A	N/A	N/A	N/A
Burner (with conductor)	2930697079	2930697079	2930697079	2930697079	2930697079	2930697079	2930697079
Door reversing kit, (light brown)	385030401	385030401	N/A	N/A	N/A	N/A	N/A
Door reversing kit, (black)	385030402	385030402	N/A	N/A	N/A	N/A	N/A
Door reversing kit, right-left (light brown)	N/A	N/A	293275002	293275002	293275002	293275002	293275008
Door reversing kit, left-right (light brown)	N/A	N/A	293275003	293275003	293275003	293275003	293275009
Door reversing kit, right-left (black)	N/A	N/A	293275013	293275013	293275013	293275013	293275011
Door reversing kit, left-right (black)	N/A	N/A	293275014	293275014	293275014	293275014	293275012
Door shelf, lower	N/A	N/A	2932575018	2932575018	2932575018	2932575018	2932575018
Door shelf, (2 pieces)	N/A	N/A	2932576016	2932576016	N/A	N/A	2932576016
Door shelf, (3 pieces)	2002261242	2002261242	N/A	N/A	2932576016	2932576016	N/A
Door shelf, freezer	N/A	N/A	N/A	N/A	N/A	N/A	2932577014
Electrode	2932781012	2932781012	2932781012	2932781012	2932781012	2932781012	2932781012
Halogen lamp (12V, 10W base G4)	N/A	N/A	N/A	N/A	N/A	N/A	N/A
Handle (black)	N/A	N/A	2932670025	2932670025	2932670025	2932670025	3851174023
Heater 175W, 12V	N/A	3850646104	N/A	3850646104	N/A	3850646104	N/A
Heater 175W, 120V	3850644455	3850644455	3850644455	3850644455	3850644455	3850644455	N/A
Heater 275W, 12V	N/A	N/A	N/A	N/A	N/A	N/A	N/A
Heater 325W, 120V	N/A	N/A	N/A	N/A	N/A	N/A	3850644422

APPENDIX A - SPARE PARTS

MODEL / SPARE PARTS	DM2662	DM2663	DM2852	DM2862	NDM1062
Airing position card	3312986.403	3312986.403	3312986.403	3312986.403	N/A
Baffle	2932667039	2932667039	2932667047	2932667047	2932667047
Box	N/A	N/A	N/A	N/A	N/A
Box, vegetable	2932621077	2932621077	2932621010	2932621077	N/A
Box, vegetable (crisper), 2 pieces	N/A	N/A	N/A	N/A	2002726178
Box, vegetable (meat locker)	N/A	N/A	N/A	N/A	2932621085
Burner (with conductor)	2930697079	2930697079	2930697079	2930697079	2930697079
Door reversing kit, (light brown)	N/A	N/A	N/A	N/A	N/A
Door reversing kit, (black)	N/A	N/A	N/A	N/A	N/A
Door reversing kit, right-left (light brown)	N/A	N/A	293275008	N/A	N/A
Door reversing kit, left-right (light brown)	N/A	N/A	293275009	N/A	N/A
Door reversing kit, right-left (black)	293275011	293275011	293275011	293275011	293275011
Door reversing kit, left-right (black)	293275012	293275012	293275012	293275012	293275012
Door shelf, lower	2932575059	2932575059	2932575018	2932575059	2932575075
Door shelf, (2 pieces)	2932576065	2932576065	N/A	N/A	N/A
Door shelf, (3 pieces)	N/A	N/A	2932576016	2932576065	2932576081
Door shelf, freezer	N/A	N/A	2932577014	N/A	N/A
Electrode	2932781012	2932781012	2932781012	2932781012	2932781012
Halogen lamp (12V, 10W base G4)	N/A	N/A	N/A	N/A	3850455019
Handle (black)	3851174023	3851174023	3851174023	3851174023	2932094044
Heater 175W, 12V	N/A	N/A	N/A	N/A	N/A
Heater 175W, 120V	N/A	N/A	N/A	N/A	N/A
Heater 275W, 12V	N/A	3850646096	N/A	N/A	N/A
Heater 325W, 120V	3850644422	3850644422	3850644422	3850644422	3850644422

APPENDIX B - REARVIEW EQUIPMENT

RM2351 & RM2354

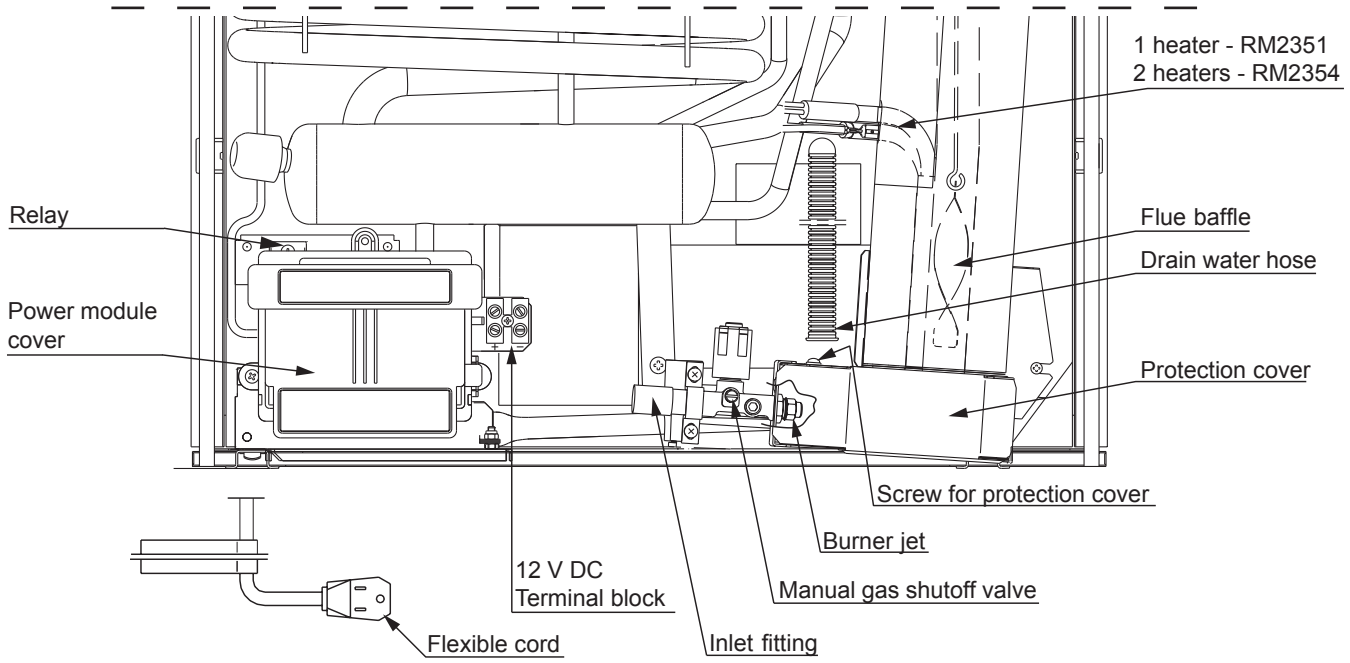

RM2451, RM2454, RM2551 & RM2554

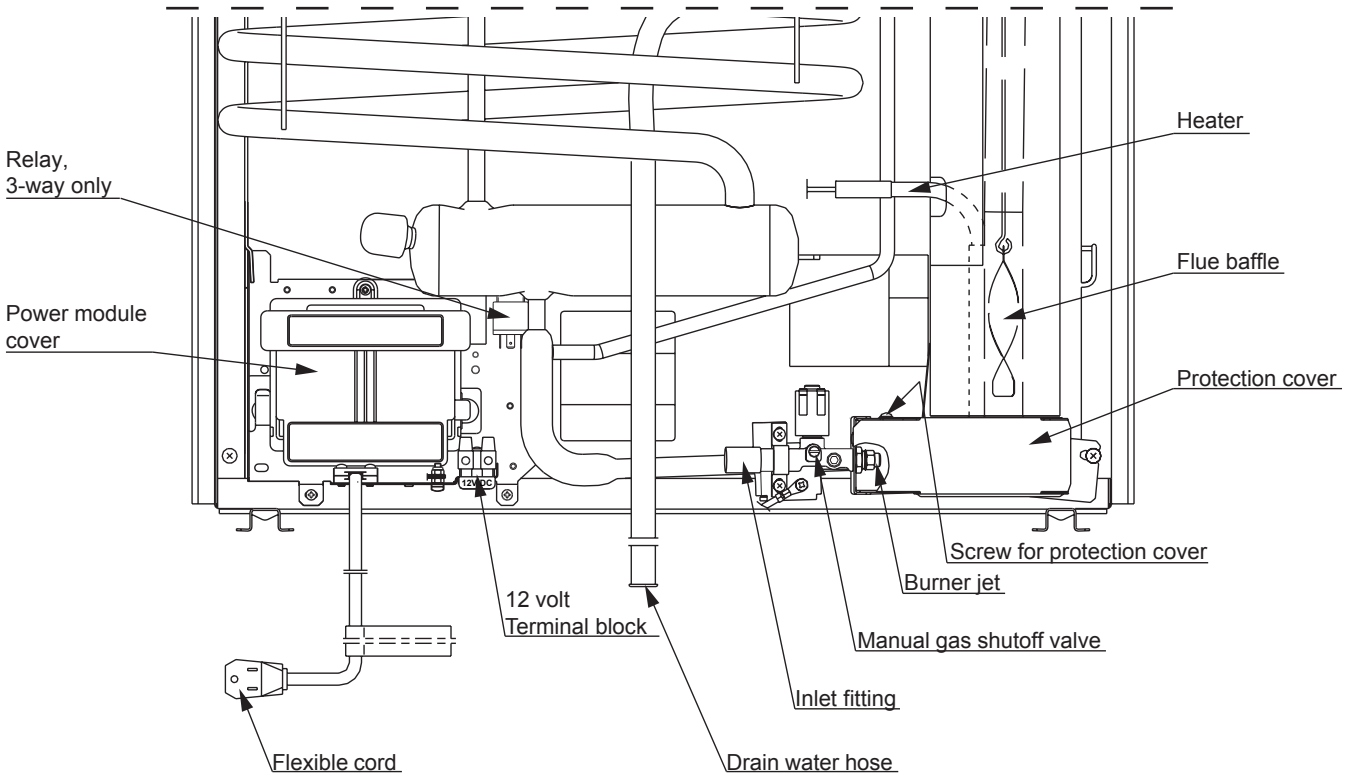

APPENDIX B - REARVIEW EQUIPMENT

DM2652, DM2662, DM2663, DM2852, DM2862 & NDM1062

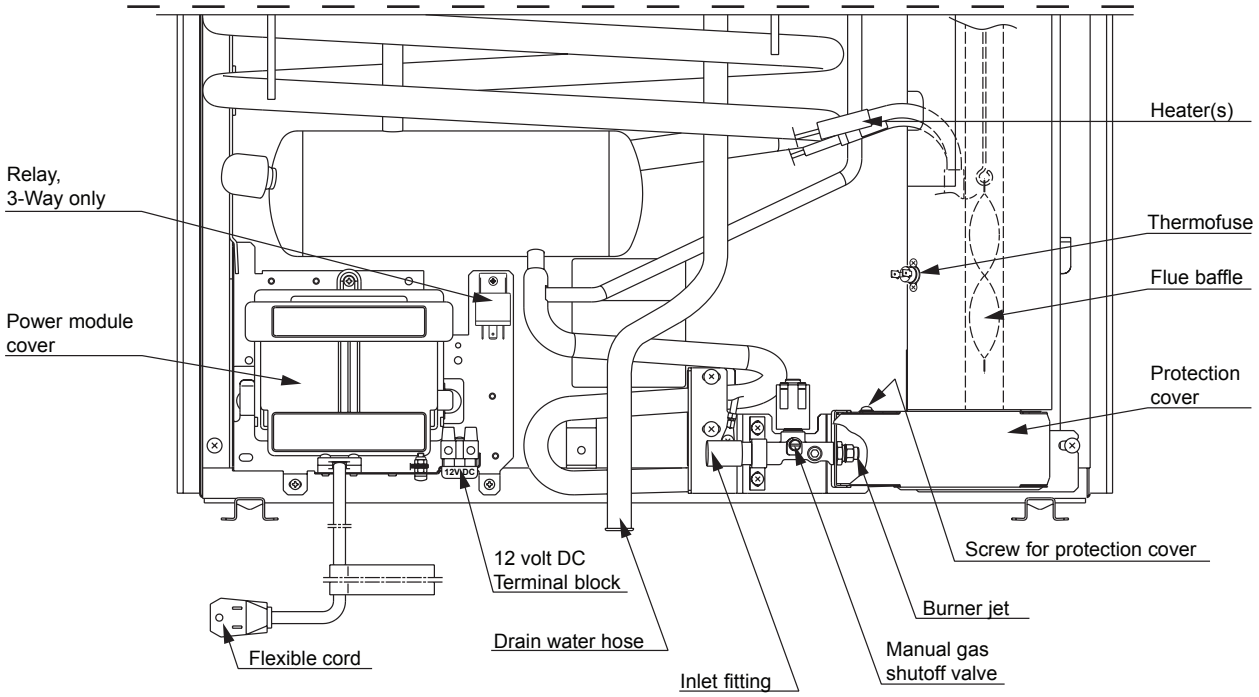

Shown without Secondary Burner Housing for illustrative purposes only.

NDM1062 (WITH ICE MAKER)

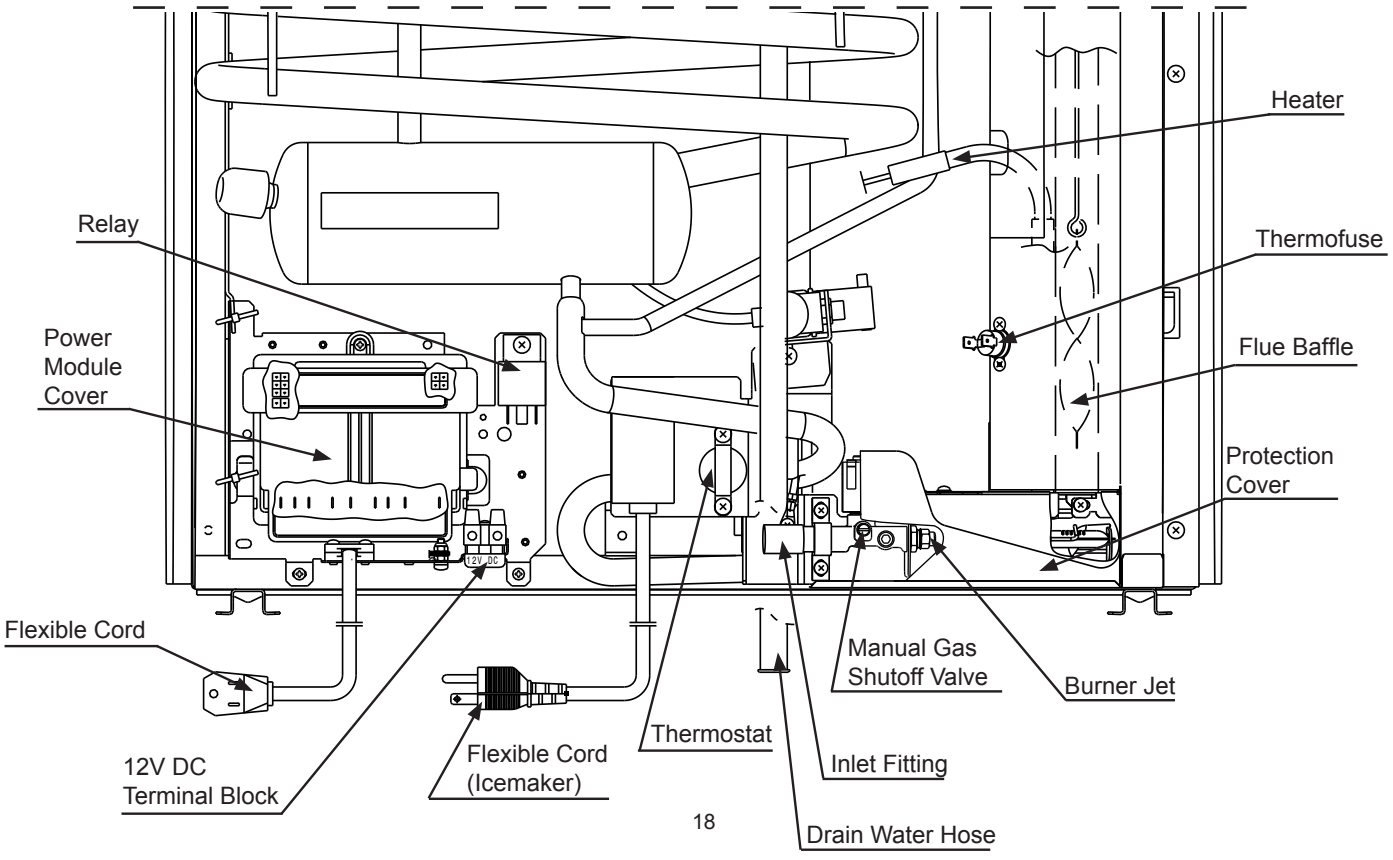

Shown without Secondary Burner Housing for illustrative purposes only.

APPENDIX C - WIRING DIAGRAM

RM2351, RM2451 & RM2551

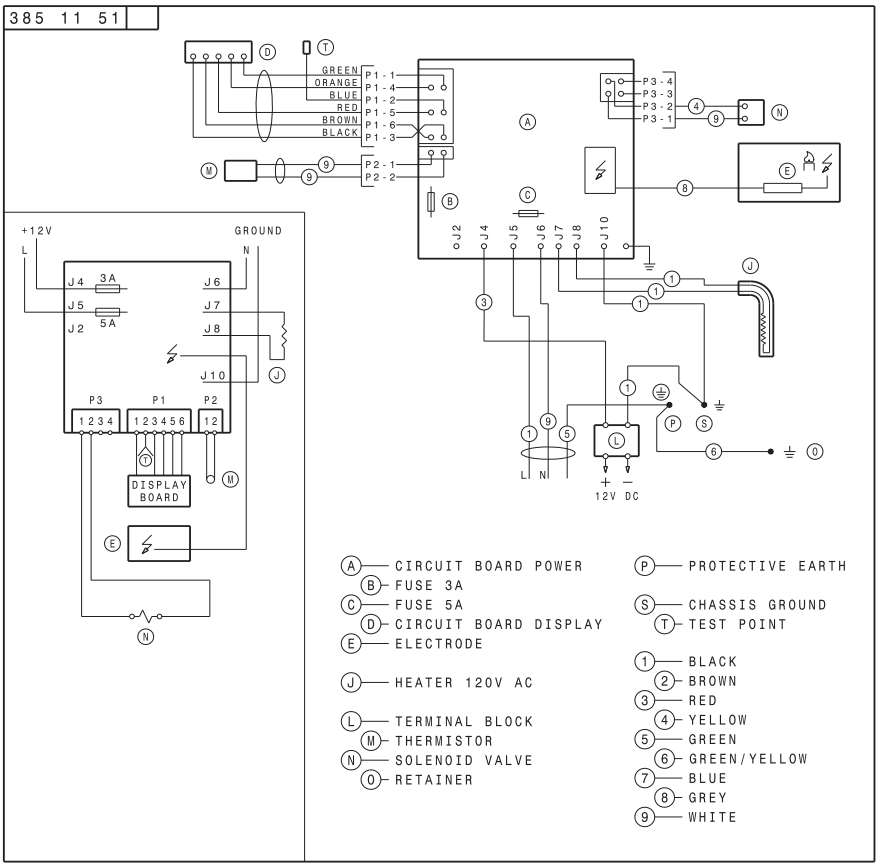

RM2354, RM2454 & RM2554

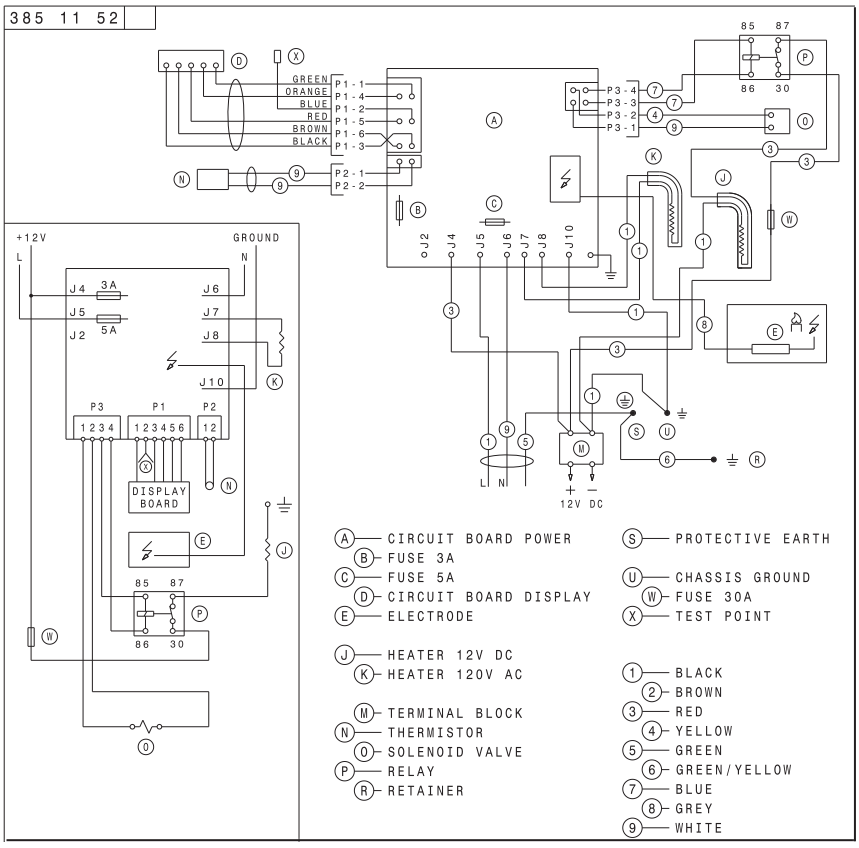

APPENDIX C - WIRING DIAGRAM

DM2652, DM2662, DM2852 & DM2862 (NO FAN) WITH AND WITHOUT ICE MAKER

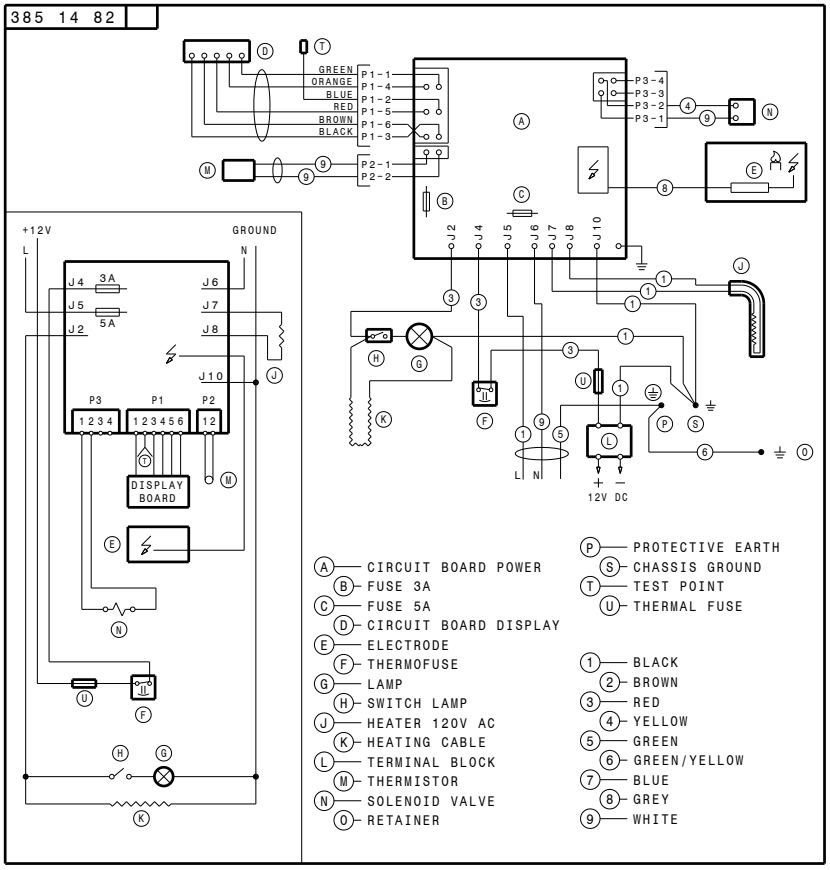

DM2652, DM2662, DM2852 & DM2862 (ONE FAN) WITH AND WITHOUT ICE MAKER

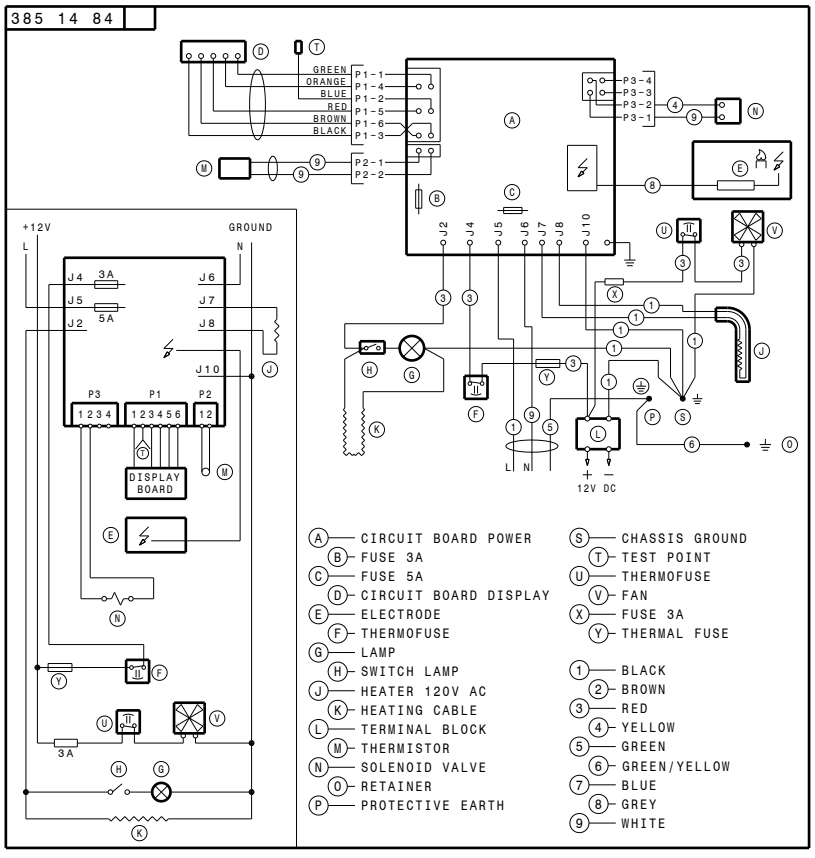

APPENDIX C - WIRING DIAGRAM

DM2663 (NO FAN) WITHOUT ICE MAKER

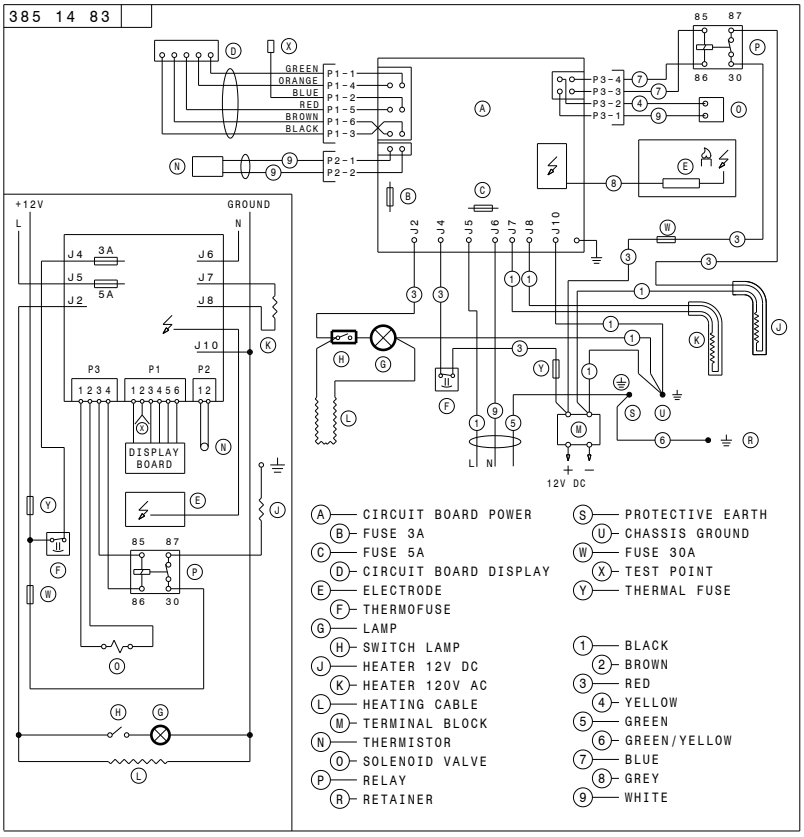

NDM1062 (STAINLESS STEEL DOORS)

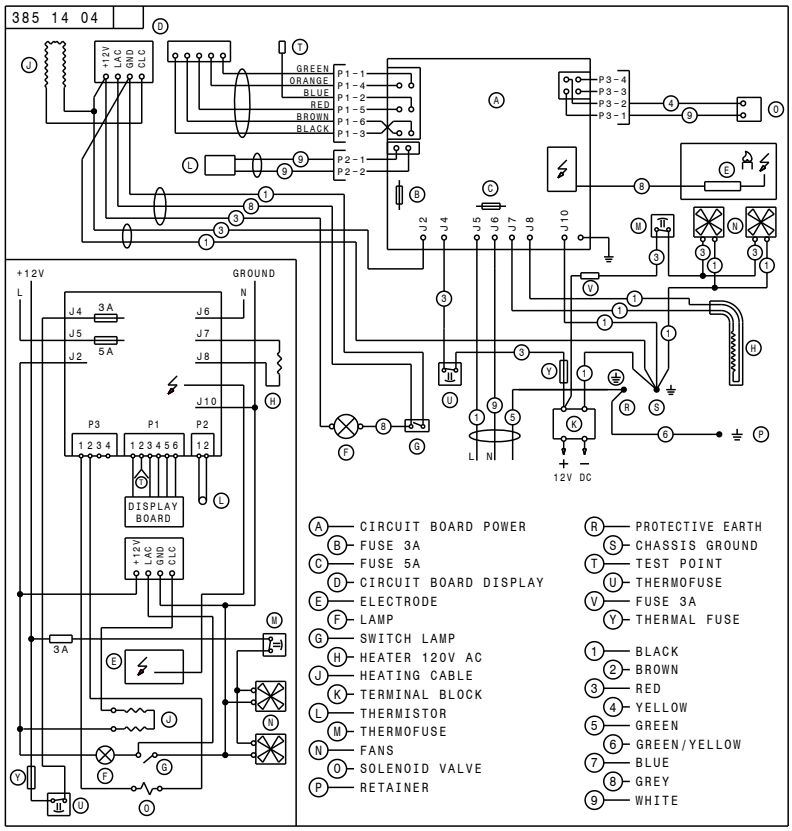

APPENDIX C - WIRING DIAGRAM

NDM1062 (STAINLESS STEEL DOORS & ICE MAKER)

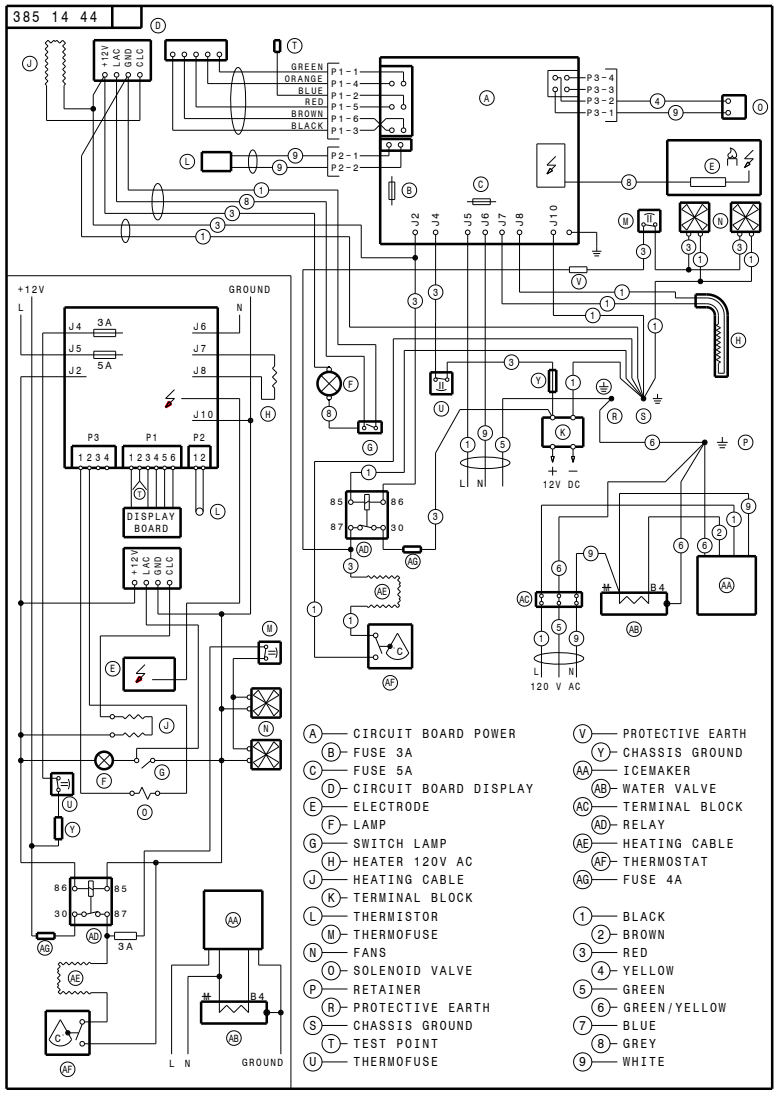

APPENDIX C - WIRING DIAGRAM

NDM1062 (DOOR INSERT PANELS)

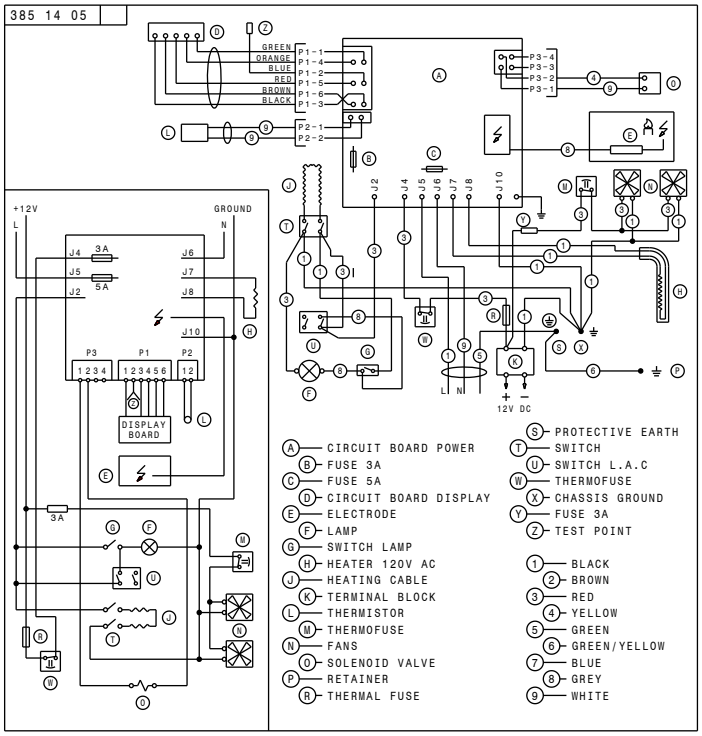

NDM1062 (DOOR INSERT PANELS & ICE MAKER)

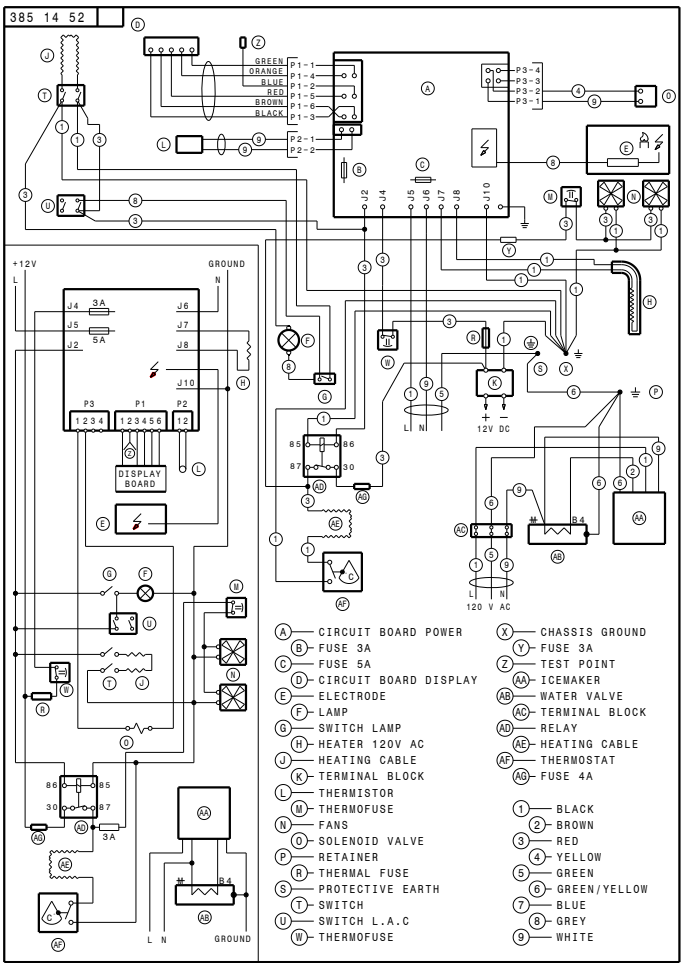

APPENDIX D - CONSUMER SUPPORT

Dometic website www.DometicUSA.com

Please visit our website for information and news about Dometic products. Our website provides information on product care and warranties. You can also download product literature, including manuals and brochures.

Service and spare parts www.eDometic.com

For service and spare parts, please contact Service Center Assistance. Please see the front page of this manual - or - visit our Dometic website to find a Dometic Service Center near you.

Contact us www.DometicUSA.com

For contact information, please see the front page of this manual - or - visit our Dometic website.

Register product www.eDometic.com

Timely registration allows for enhanced communication and service under the terms of your warranty. Please see “Appendix E - Dometic Warranty” on page (25).
To register your product, fill in the pre-printed registration card on the last page of this manual, or register on-line at www.eDometic.com.

TO REGISTER ON-LINE:

1. Access www.eDometic.com then click “**Register your Dometic PRODUCT**.”

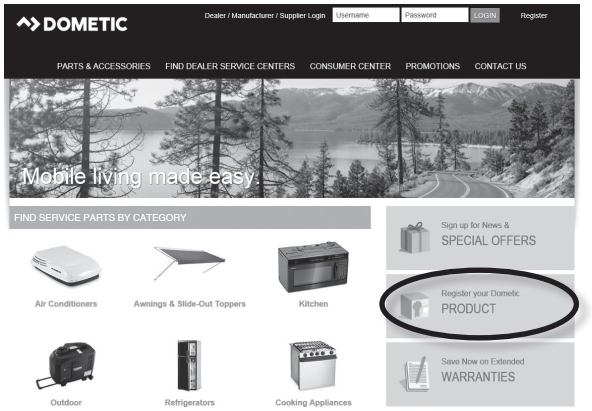

2. Complete the on-line form, then click “**SUBMIT**”.

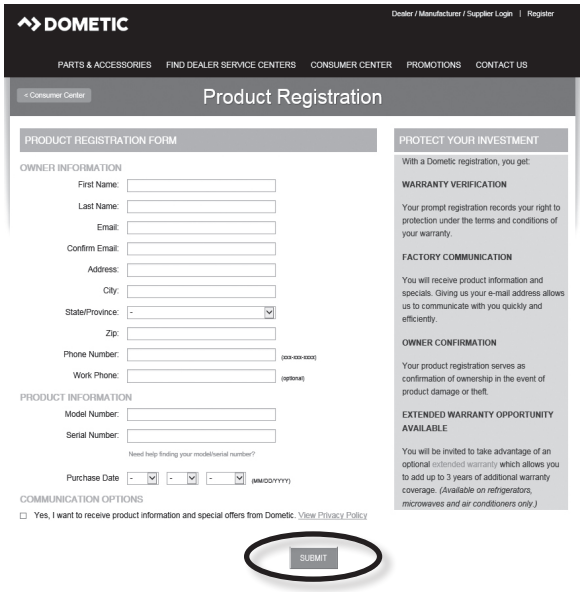

APPENDIX E - DOMETIC WARRANTY

LIMITED TWO-YEAR WARRANTY (DOMETIC REFRIGERATORS)

THE SELLER NAMED BELOW MAKES THE FOLLOWING WARRANTY WITH RESPECT TO THE DOMETIC PRODUCT:

1. This Warranty is made only to the first purchaser (hereinafter referred to as the "Original Purchaser"), who acquires the Dometic Product for his or her own use and when the Dometic Product is installed and operated within the continental United States and Canada.
2. WARRANTY PERIOD: This Warranty will be in effect for two (2) years from the date of purchase by the Original Purchaser. The Original Purchaser should retain a copy of the dated bill of sale as evidence of the date of purchase.
3. WARRANTY: This Warranty covers labor, specified parts, and freight. The Dometic Product shall be free from defects in material and workmanship at the time of sale and under normal use. All Dometic Products (except those specifically built for commercial use) are warranted only when installed per the Seller's installation instructions on vehicles built to R.V.I.A. A119-2 and C.R.V.A. Z-240 Standards. This Warranty does NOT cover conditions unrelated to the material and workmanship of the Dometic Product. Such unrelated conditions include, but are not limited to: (a) damage not reported within 10 days of ownership; (b) faulty installation or installation that does not comply with the Seller's instructions or R.V.I.A. and C.R.V.A. standards, and any damage resulting from such; (c) damage or failure caused by installation of accessories not manufactured and marketed by the Seller or any non-Dometic parts that are installed as replacement parts; (d) the need for normal maintenance and any damage resulting from the failure to provide such maintenance; (e) failure to follow Seller's instructions for use of this Dometic Product; (f) flame outage due to blow out or high altitude; (g) reduced performance due to high altitude; (h) radio frequency interference (RFI) or electromagnetic interference (EMI); (i) 12 VDC system chassis ground decay and corrosion; (j) puncture of foam cabinet or vacuum insulated panels after acknowledged receipt; (k) animal or insect infiltration which damages unit or inhibits performance; (l) any accident to, or misuse of, any part of the Dometic Product and any alteration by anyone other than the Seller or its authorized representative; and (m) normal wear.
4. WARRANTY COVERS DOMETIC COMPONENT PARTS: Major components (cooling unit, LP gas valve, burner, burner housing, electronic display, electronic module, evaporator fins, foam integrity, frame, thermistor, spark probe, ignition wire, ice maker compressor, second absorption loop, display escutcheon, lower toe plate, humidity switch, frame heater mullion, ice maker mullion) are covered for labor, parts and freight for two (2) years from date of purchase. All other components that fail must be reported within the first 90 days of ownership in order to receive warranty coverage for labor, parts and freight.
5. The Original Purchaser must provide preventative maintenance on a yearly basis, beginning at the first anniversary of the date of purchase. The Original Purchaser must keep a record of the preventative maintenance to keep the warranty in effect. Failure of the Original Purchaser in providing this annual maintenance may void the warranty. The preventative maintenance must be performed at a Dometic Authorized Service Center/Dealer. The required preventative maintenance is an inspection, cleaning and full diagnostics performed on the entire electronic system, burner assembly, wiring and cooling unit. A copy of the receipt covering the maintenance checks must accompany the warranty claim during the second year of ownership. The cost of this preventative maintenance is the Original Purchaser's responsibility and the preventative maintenance should take about one hour.
6. WARRANTY REMEDY: In order to obtain the benefits of this Warranty, the Original Purchaser has the following two options during the WARRANTY PERIOD:
    a. Preferred option: Deliver the Dometic Product for inspection to the nearest Authorized Dometic Service Center during the Warranty Period. To obtain the location of the nearest Authorized Dometic Service Center, refer to https://www.dometic.com/en-us/us/find-a-dealer. The Authorized Dometic Service Center will work with the Seller to obtain Warranty coverage if a Seller defect is identified. CONFIRM THE SERVICE CENTER IS AN AUTHORIZED DOMETIC SERVICE CENTER. DO NOT PAY THE SERVICE CENTER FOR WARRANTY REPAIRS.
    b. Second option: If it is not feasible under the circumstances to deliver the Dometic Product to an Authorized Dometic Service Center, please call 1-800-544-4881 for additional Warranty assistance. Seller prefers option a. first and only option b. if option a. is determined not to be feasible under the circumstances.
7. Any item returned in the manner described in paragraph 6 will be examined by the Authorized Dometic Service Center. If it is found that the returned item was defective in material and workmanship at the time of sale, the Authorized Dometic Service Center will contact the Seller for Warranty coverage. The Seller shall, at Dometic's sole option, repair or replace the Dometic Product, or refund Original Purchaser's purchase price. If the Seller determines that repairs to the Dometic Product are to be made, then only authorized Dometic parts will be used.
8. The Seller does not authorize any person or company to create any Warranty obligations or liability on its behalf. This Warranty is not extended by the length of time which you are deprived of the use of the Dometic Product.
9. **IN NO EVENT SHALL SELLER BE LIABLE FOR EITHER INCIDENTAL OR CONSEQUENTIAL DAMAGES. THIS INCLUDES ANY DAMAGE TO ANOTHER PRODUCT OR PRODUCTS RESULTING FROM SUCH A DEFECT. SOME STATES DO NOT ALLOW THE EXCLUSION OR LIMITATION OF INCIDENTAL OR CONSEQUENTIAL DAMAGES, SO THE ABOVE LIMITATIONS MAY NOT APPLY TO YOU.**
10. **ANY IMPLIED WARRANTY, INCLUDING THE IMPLIED WARRANTY OF MERCHANTABILITY AND FITNESS FOR ANY PURPOSE, IS LIMITED TO THE DURATION OF THIS LIMITED WARRANTY. SOME STATES DO NOT ALLOW LIMITATIONS ON HOW LONG AN IMPLIED WARRANTY LASTS, SO THE ABOVE LIMITATION MAY NOT APPLY TO YOU.**
11. **THIS WARRANTY GIVES SPECIFIC LEGAL RIGHTS, YOU MAY ALSO HAVE OTHER RIGHTS WHICH VARY FROM STATE TO STATE.** No action to enforce this Warranty shall be commenced later than ninety (90) days after the expiration of the Warranty Period. Claims must be submitted in writing to the Dometic Warranty Department.
12. The Seller reserves the right to change the design of any Dometic product without notice and with no obligation to make corresponding changes in Dometic products previously manufactured.

PROTECTION FOR YOUR NEW INVESTMENT
We appreciate that you have chosen to purchase a Dometic product for your recreational vehicle and we want to help you protect this wise investment. We at Dometic, back our products with one of the most comprehensive warranties in the industry.
Register your product online at: www.eDometic.com.

Dometic Corporation
Warranty Department
1120 North Main Street
Elkhart, Indiana 46514
1-574-294-2511
Register Your Product @
www.eDometic.com

Form No. 3316980.000 (10/17)
(French 3316985.000)
©2017 Dometic Corporation
LaGrange, IN 46761

APPENDIX F - MAINTENANCE SCHEDULE

REFRIGERATOR OWNER MAINTENANCE YEARLY RECORD

Customer Name: _____ **Model No.:** _____ **Date of Purchase:** _____
Address: _____ **Serial No.:** _____
City: _____ **State:** _____ **Zip Code:** _____
Phone: _____

FIRST YEAR

Date: _____
Dealership: _____
_____
Address: _____
_____
City: _____
State: _____ Zip: _____
Phone: _____
Technician: _____

Cleaned Burner Assembly:	Yes / No
Cleaned/Check All Terminals Connections:	Yes / No
Cleaned/Inspect All Ground Connections:	Yes / No
Inspect and Test Door Seals:	Yes / No
Inspect and Tighten LP Lines:	Yes / No
Power Ventilator Installed:	Yes / No
Gas Safety Shutdown in 45 seconds:	Yes / No

	ACTUAL	SPEC. RANGE
Electrode Gap	_____	3/16”
Thermistor Reading	_____	7-10,000 ohms @ 32°
D/C Voltage	_____	9.5 to 15 volts D/C
A/C Voltage	_____	120 Volts ± 10%
Thermocouple Reading	_____	25-35 Millivolts
Delay Between Modes	_____	Approx. 5 seconds

ICE MAKER MODELS

Inspect Water Valve and All Connections:	Yes / No
Inspect Heat Tape Switch for Proper Operation:	Yes / No

SECOND YEAR

Date: _____
Dealership: _____
_____
Address: _____
_____
City: _____
State: _____ Zip: _____
Phone: _____
Technician: _____

Cleaned Burner Assembly:	Yes / No
Cleaned/Check All Terminals Connections:	Yes / No
Cleaned/Inspect All Ground Connections:	Yes / No
Inspect and Test Door Seals:	Yes / No
Inspect and Tighten LP Lines:	Yes / No
Power Ventilator Installed:	Yes / No
Gas Safety Shutdown in 45 seconds:	Yes / No

	ACTUAL	SPEC. RANGE
Electrode Gap	_____	3/16”
Thermistor Reading	_____	7-10,000 ohms @ 32°
D/C Voltage	_____	9.5 to 15 volts D/C
A/C Voltage	_____	120 Volts ± 10%
Thermocouple Reading	_____	25-35 Millivolts
Delay Between Modes	_____	Approx. 5 seconds

ICE MAKER MODELS

Inspect Water Valve and All Connections:	Yes / No
Inspect Heat Tape Switch for Proper Operation:	Yes / No