User Manual of Product 1:

SCHMECKE 18 Bottle Compressor Wine Cooler Refrigerator w/Lock - Large Freestanding Wine Cellar - 41f-64f Digital Temperature Control Wine Fridge For Red, White, Champagne or Sparkling Wine - Black

User Manual of Product 2:

Oster Electric Wine Opener and Foil Cutter Kit with CorkScrew and Charging Base, Silver

Let's build the

Theo Bookcase

35 MINUTE ASSEMBLY

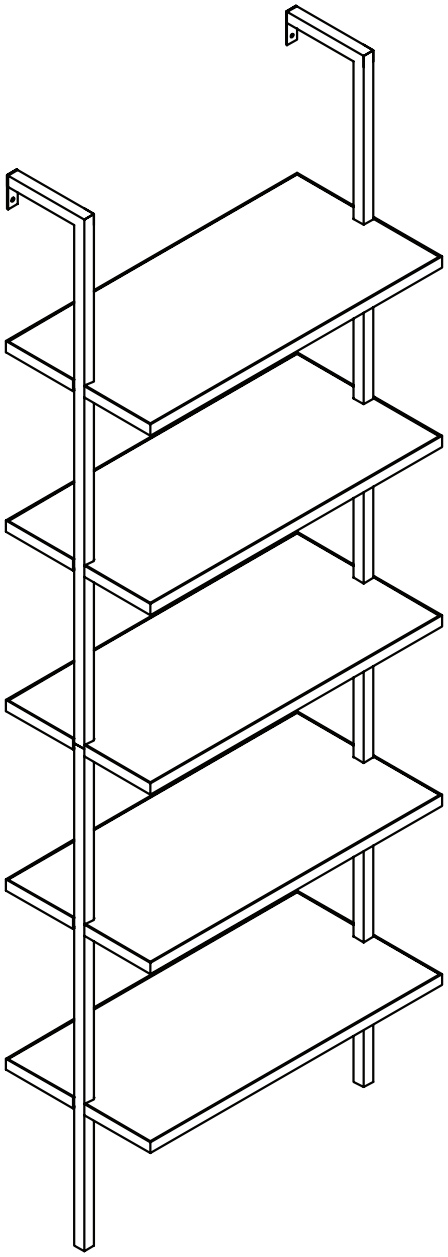

Scan me!

Inspiration
Digital Instructions
Free Lifetime Warranty

nathan james

21-0727

Ok, let's get rolling

This should be easy, just follow our instructions and you will be back to Netflix in no time.

Estimated time for assembly

35:00

What you need

- Some of your favourite bubbly or your preferred relaxant
- Use the packaging carton as a working surface to prevent product damage during assembly
- Phillips head screwdriver (not included)
- Drill (not included)
- 1/4" Drill bit (not included)
- 5/16" Drill bit (not included)

Weight Limitation

50
lbs per shelf

Toll-free at 1-866-619-1004
Help@nathanjames.com
Nathanjames.com/help

What's included

	Description	Qty
A	Bookcase Shelves	5
B	Top Wall Mount Frame Support	2
C	Bookcase Frame Base Support	2
D	Bookcase Joint Attachment	2
1	M6*15mm Bolt	14
2	M4.2*32mm Screw for Non-drywall Anchor	2
3	Non-drywall Anchor	2
4	Allen Key	1
5	Drywall Anchor	2
6	M4.2*50mm Screw for Drywall Anchor	2

Scan me!
Inspiration
Digital Instructions
Free Lifetime Warranty

The goods

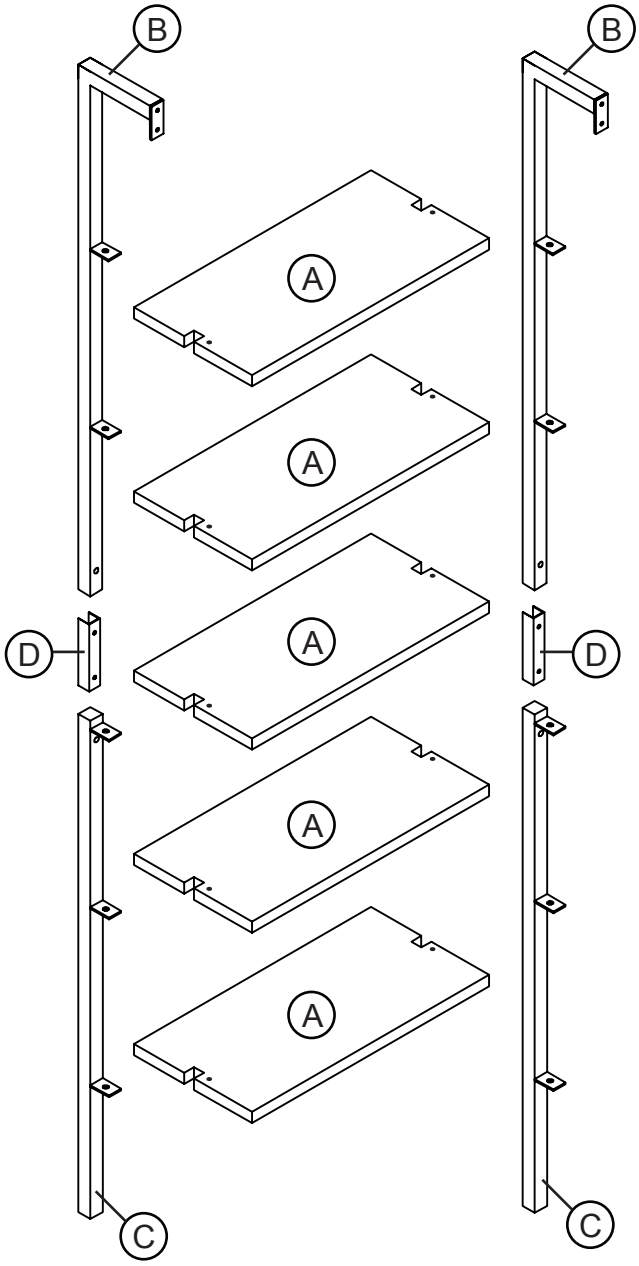

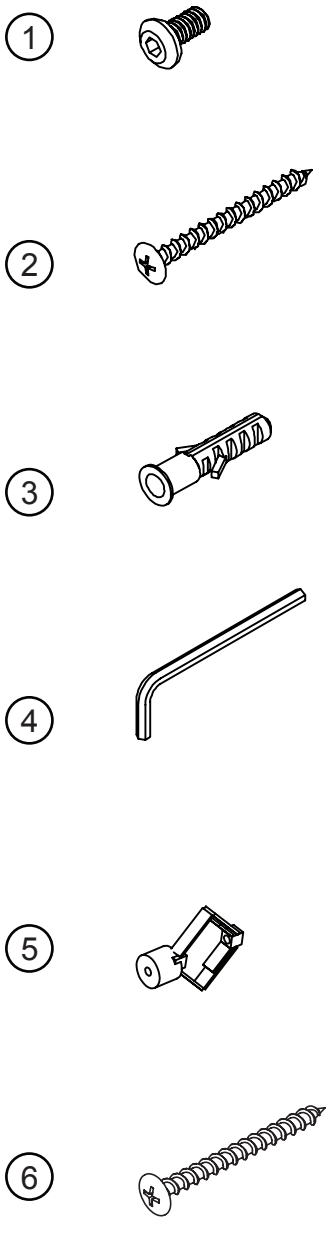

IMPORTANT

1. Do not tighten bolts / screws completely until all bolts / screws are lined up and inserted into holes.

2. Do not over tighten screws and bolts to avoid stripping.

3. Please use hand tools to assemble this product. Do not use power tools.

Step 1

Lay down packaging carton or carpet as a working surface. Insert part D into part B. Secure bolts with an allen wrench (included).

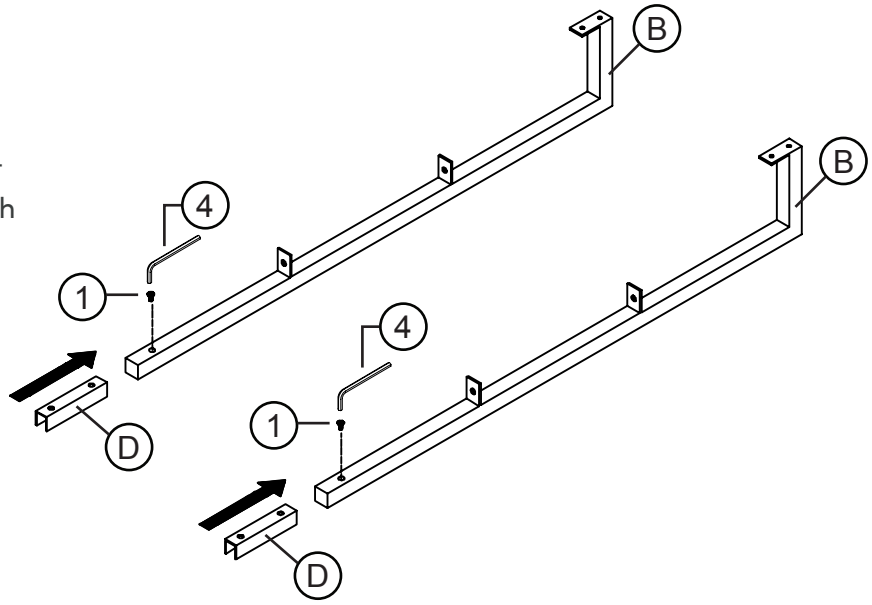

Step 2

Repeat step 1, insert part C into Part D. Now we're cooking!

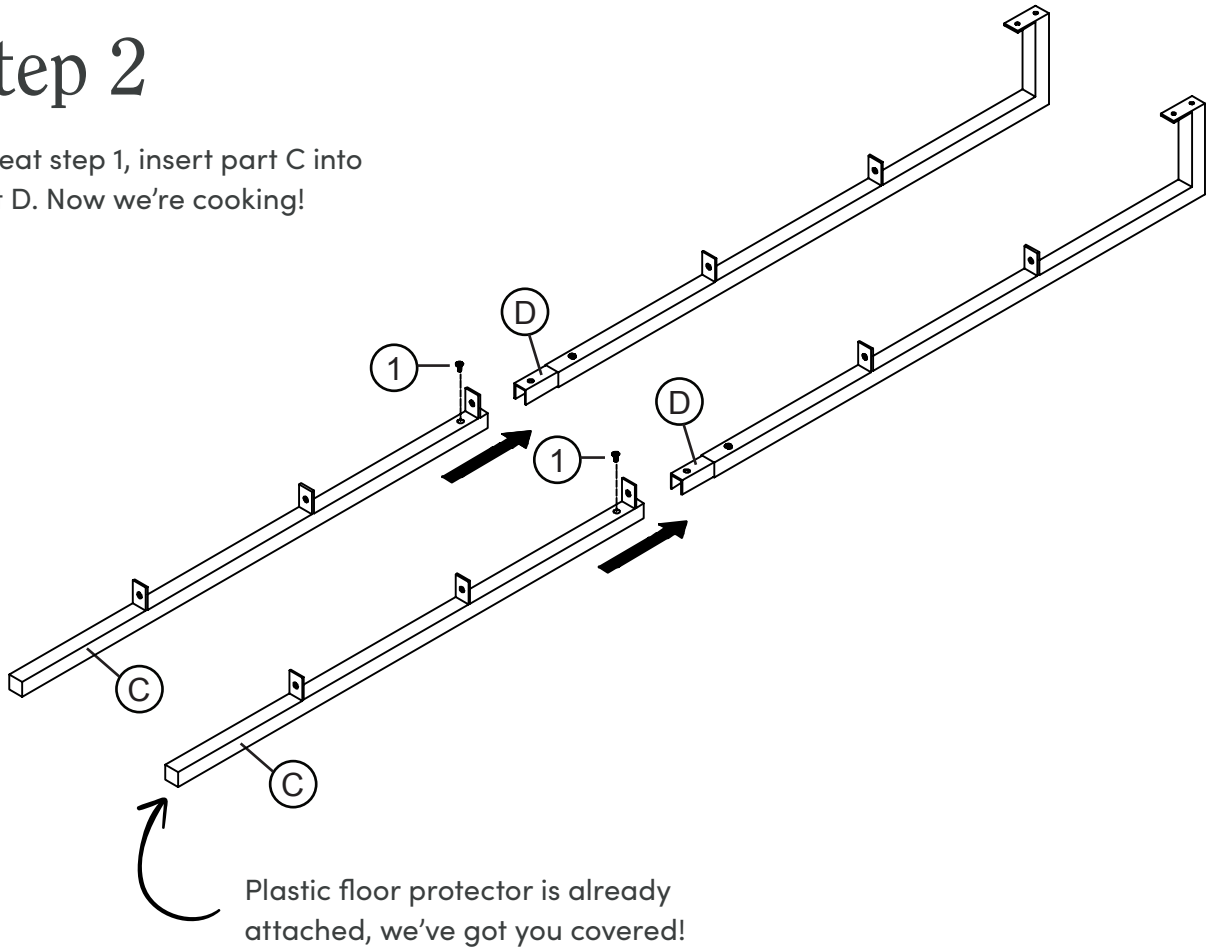

Plastic floor protector is already attached, we've got you covered!

Step 3

Place the top shelf first, then the last shelf. This way it will balance easier for you.

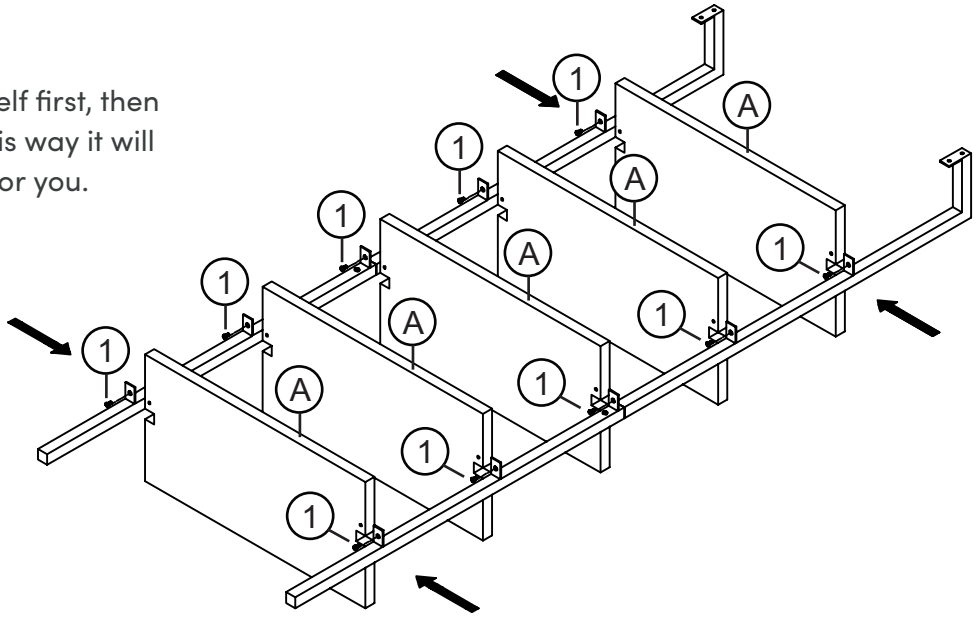

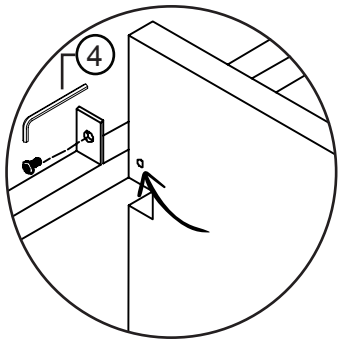

Tip from one friend to another:
Ensure the hole in the book shelves are lined up correctly with bookcase supports before placing all the shelves, then secure with allen wrench.

Step 4

We're all about individualism, but the next step requires 2 adults so there's no shame in your game—don't hurt yourself and ask for help.

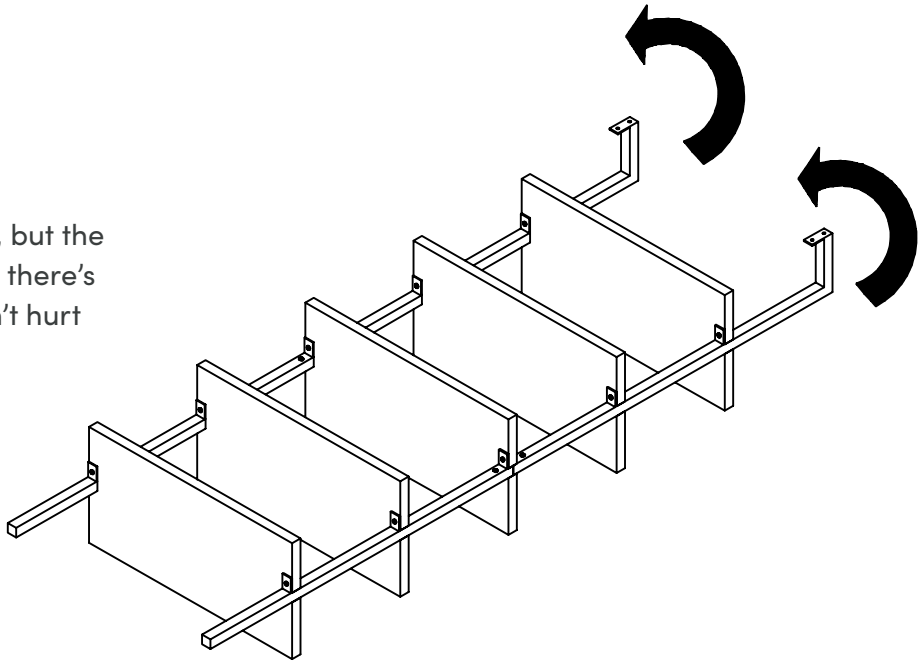

Step 5

Ok, we will admit this is our least favorite step also. At one point, you may find the last step tricky but it's worth the 20 second meltdown—because everything will look SO clean at the end...you'll forget all about the assembly!

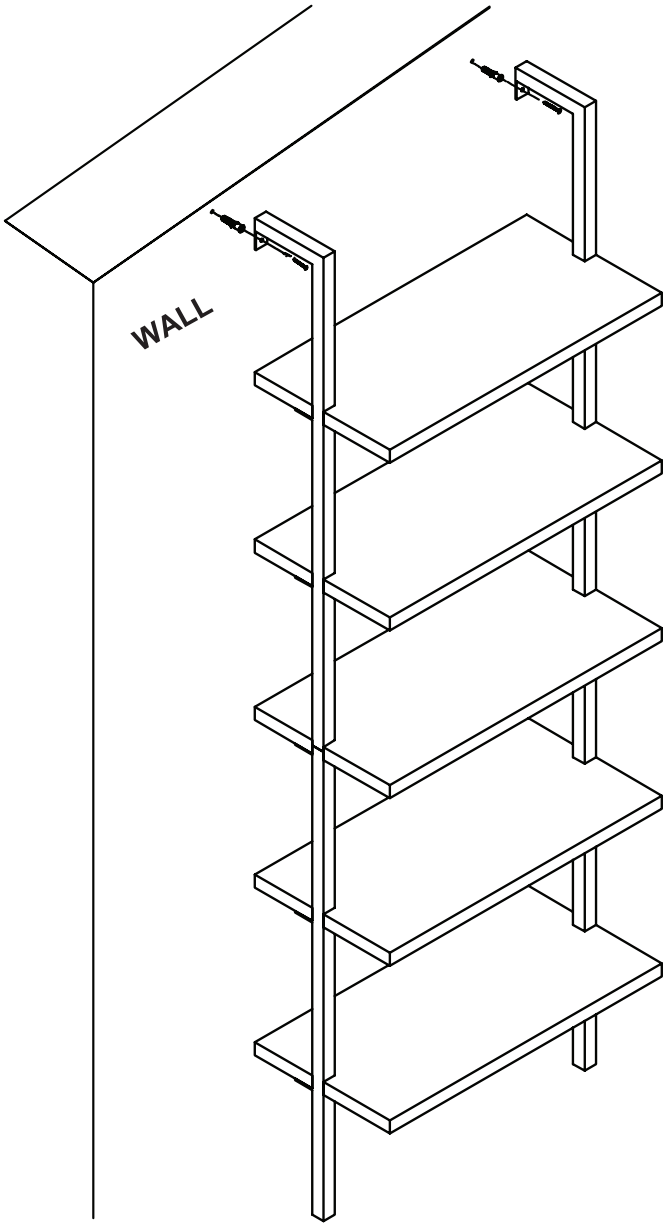

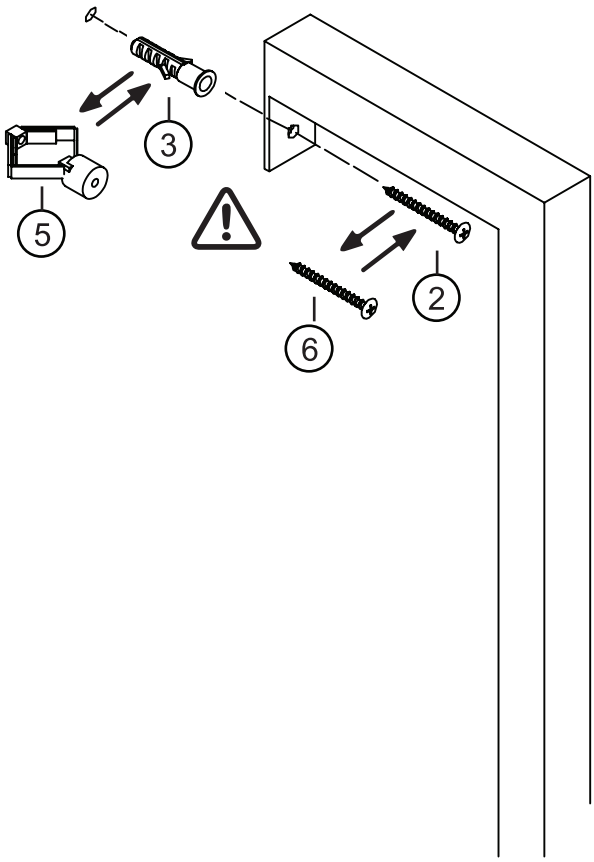

Please note...

Part 2 & 3 are for non-drywall applications. Part 5 & 6 are for drywall applications.

See following pages for more details.

Step 5 (cont.)
Non-drywall application

Mark it

Chose your desired location on the wall,
have your friend hold the bookcase in place and
use a pencil to mark where the anchors will go.

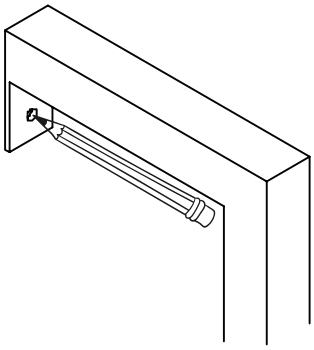

1/4" Drill bit

Move bookcase to the side and following the marks you just made, with a 1/4" drill bit, drill 2 holes into the wall.

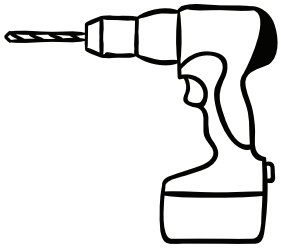

Insert the anchors

Go ahead and tap the wall anchors into place in the new holes that you just drilled.
If you're feeling strong, just go ahead and push it in.

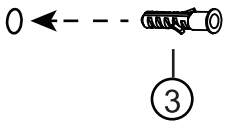

All about the angle

Insert 1 screw through each metal bracket and into the drywall anchor. Tilt your phillips head screwdriver, and secure but do not over tighten.

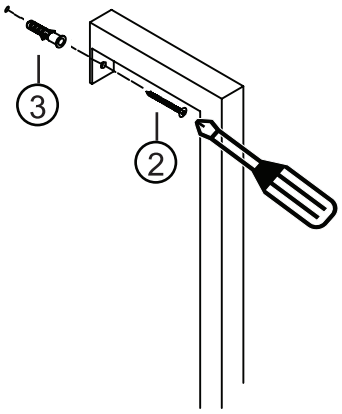

Step 5 (cont.)
Drywall application

Mark it

Chose your desired location on the wall,
have your friend hold the bookcase in place and
use a pencil to mark where the anchors will go.

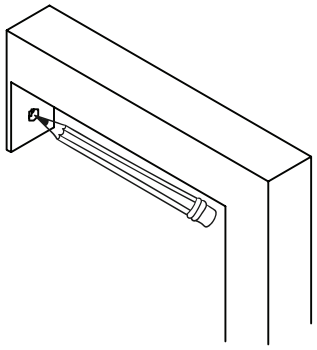

5/16” Drill bit

Move bookcase to the side and following the marks you
just made, with a 5/16” drill bit, drill 2 holes into the wall.

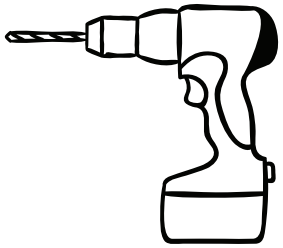

Insert the anchors

Go ahead and tap the wall anchors into place in the new
holes that you just drilled.
If you’re feeling strong, just go ahead and push it in.

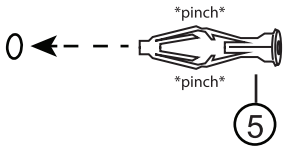

All about the angle

Insert 1 screw through each metal bracket and
into the drywall anchor. Tilt your phillips head
screwdriver, and secure but do not over tighten.

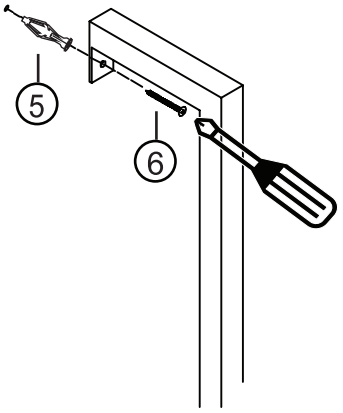

Step 5 (cont.)
How to use drywall anchors

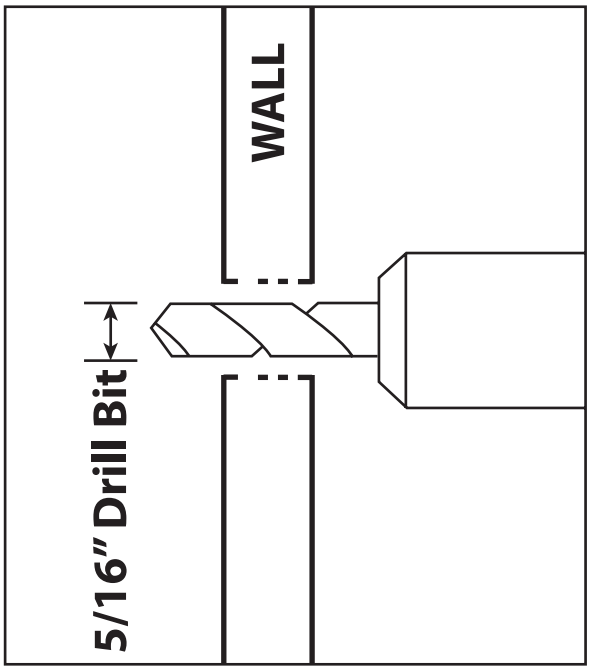

1. Drill hole with 5/16" bit

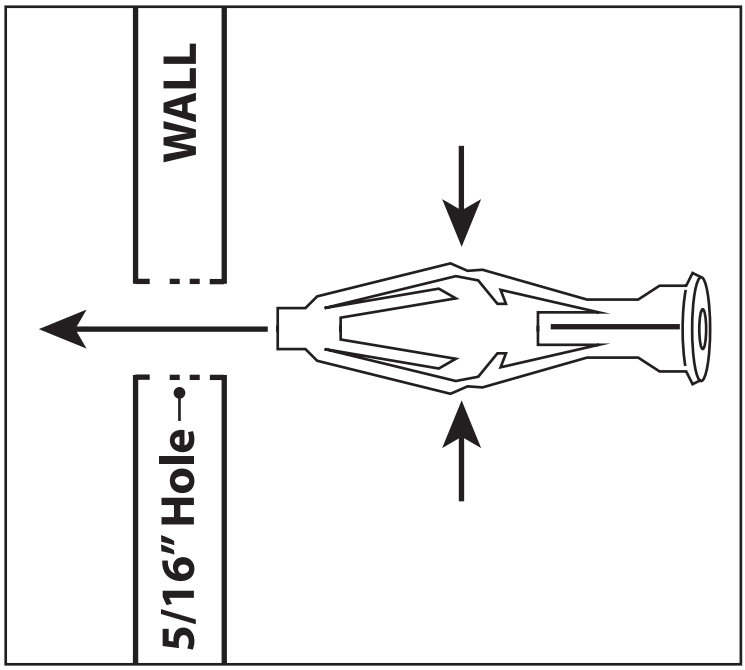

2. Pinch and insert

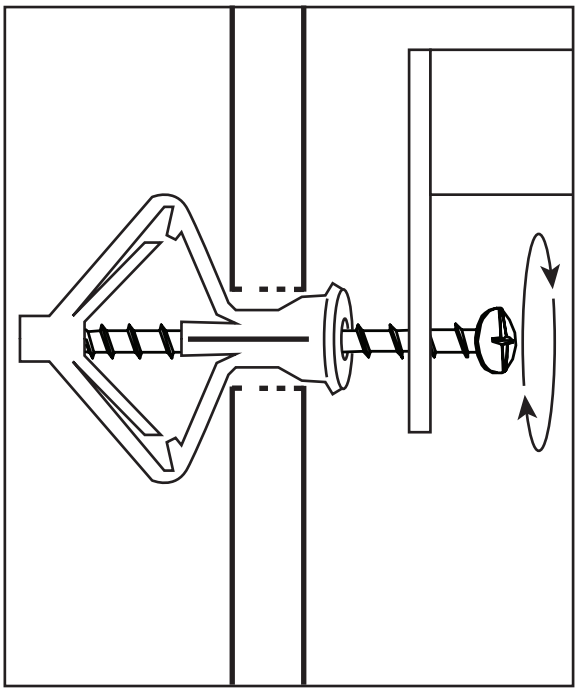

3. Begin tightening

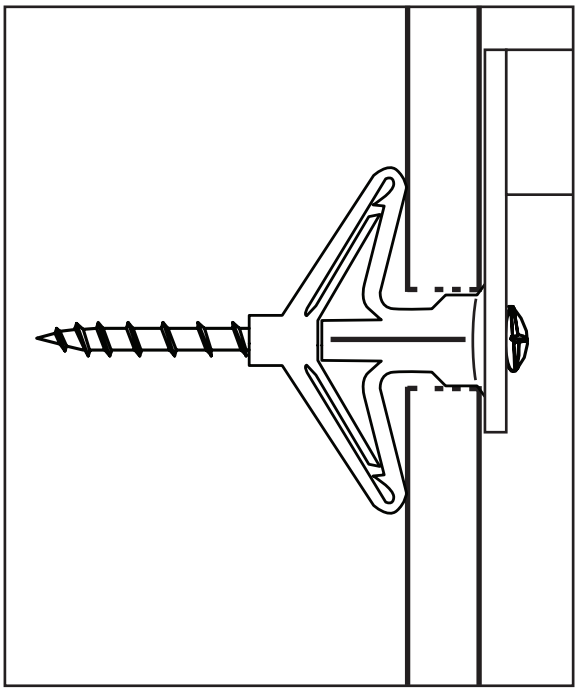

4. Tighten to 100%

No heartburn, when we handle the return

Give us a call **1-866-619-1004** or shoot us a message at **help@nathanjames.com** we will issue you a free replacement with **zero hassle**.

Our way


Give us a call


Replacement


You

Their way


Re-package item


Schedule pick up


Track package


Replacement


You

We really don't want you to go through the hassle of re-packaging your item and sending it back, because let's be honest...nobody has time for that.



Safety first, fun later

We want your Theo Bookcase to last as long as possible, so we recommend that you tighten the screws 2 weeks after assembly and for added safety check the tightness of all screws every 2 months.

For proper care and treatment of wood and metal please check our website at NathanJames.com/products

Safe use of this product starts with you.

Use this bookcase responsibly with the primary concern for your safety. Follow assembly instructions carefully and inspect product upon receipt and each use.

Nathan James and its parent companies cannot be held legally responsible for any injuries or death resulted from failure to follow instructions or improper use of this product.

Do not modify the structure of this product in any way.

Our products have been tested to meet specific safety measures as they were originally intended to be sold. Any modifications will present the risk of creating significant safety issues which NJ will not be responsible for.

Proper use

DO NOT	use for commercial purposes
DO NOT	climb bookcase
DO NOT	exceed weight limit
DO NOT	leave spilled liquid on shelves
DO NOT	use bookcase if damaged
DO NOT	make temporary repairs
DO NOT	use outdoor

We are only in business if you're happy

For starters, thanks for being you.

Toll-free at 1-866-619-1004
Help@nathanjames.com
NathanJames.com/help

We do our best to ensure your furniture arrives without any problems, but occasionally mistakes happen—as humans we are imperfect beings. In the event that a part is damaged or missing, we will be more than happy to provide you with replacement part(s) for free.

Warranty

This product comes with a lifetime warranty from the date of purchase. Please use your phone to scan the QR code to register your product or visit **https://goo.gl/i9dk3q**

Did we do alright? Please spread the love!

If you are happy with your product, tell your friends and family about us or even better leave us a review online. Spreading the word gives us the opportunity to make more people happy and keep our prices low for your next purchase.

Brooklyn Burdon

Founder, Nathan James

Let's build the

Oraa Round Side Table

20 MINUTE ASSEMBLY

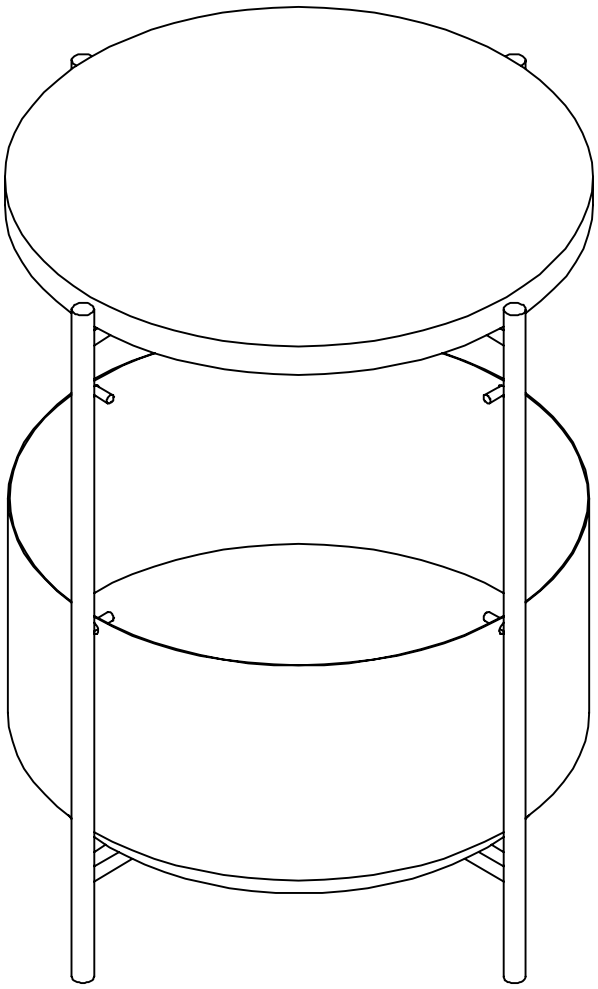

Scan me!

Inspiration
Digital Instructions
Free Lifetime Warranty

nathan james

19-0801

Ok, let's get rolling

This should be easy, just follow our instructions and you will be back to Netflix in no time.

Estimated time for assembly



20:00

What you need

- Some of your favourite bubbly or your preferred relaxant
- Use the packaging carton as a working surface to prevent product damage during assembly
- Phillips head screwdriver (not included)

Weight Limitation



75
lbs per shelf

Toll-free at 1-866-619-1004
Help@nathanjames.com
Nathanjames.com/help

What's included

	Description	Qty
A	Table Top	1
B	Basket Support Base	1
C	Metal Table Legs	4
D	Fabric Storage Basket	1
E	M4*22mm Bolt	16

Scan me!
Inspiration
Digital Instructions
Free Lifetime Warranty

The goods

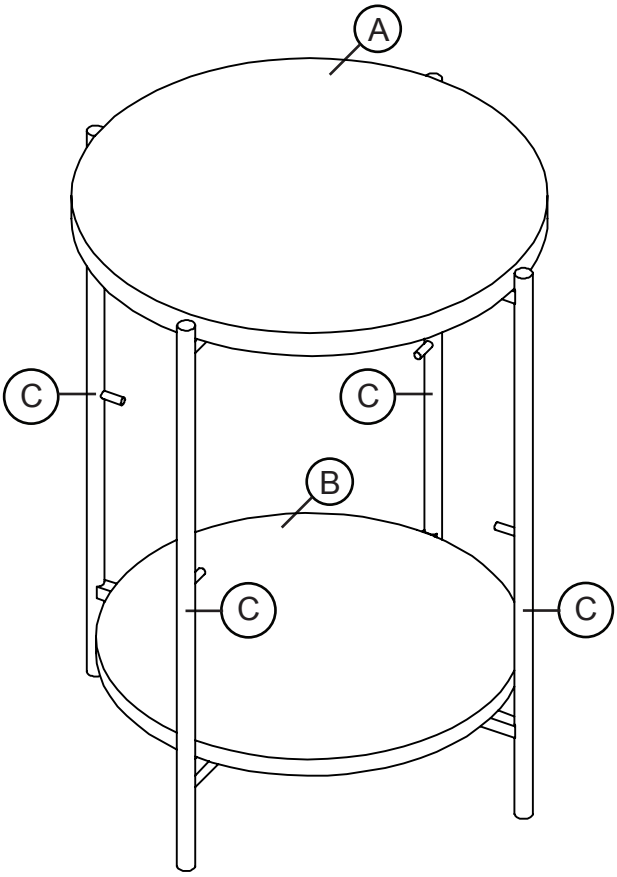

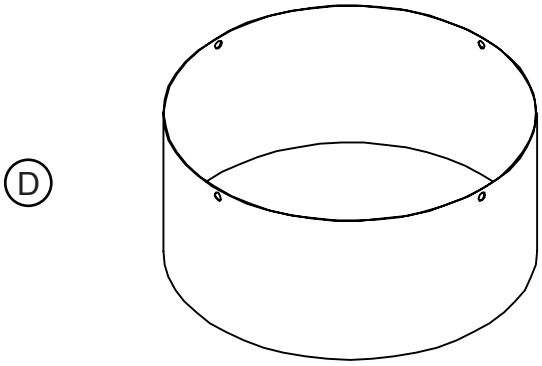

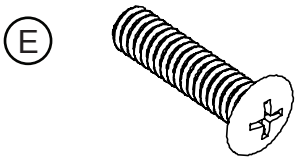

IMPORTANT

1. Do not tighten bolts / screws completely until all bolts / screws are lined up and inserted into holes.

2. Do not over tighten screws and bolts to avoid stripping.

3. Please use hand tools to assemble this product. Do not use power tools.

Step 1

Use packaging carton/carpet as a working surface. Grab your phillips head screw driver and attach the legs to the table top. This can be considered your leg workout for day... (dad joke—couldn't help myself).

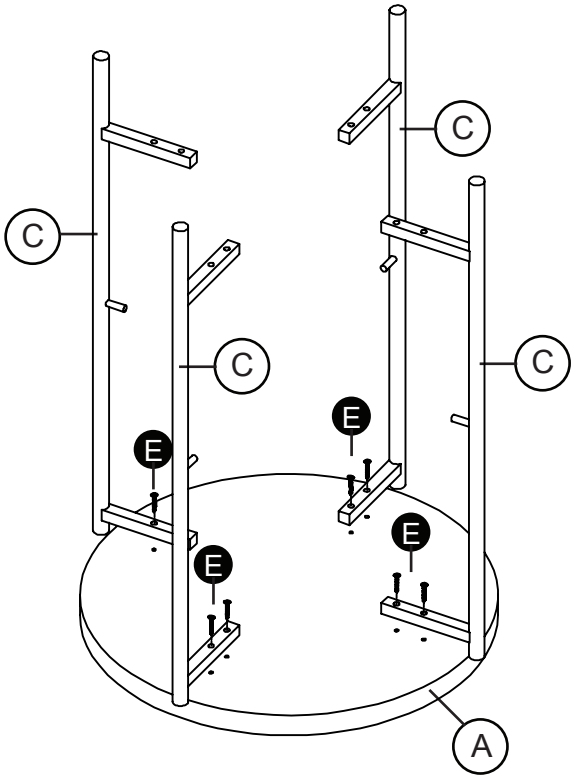

Step 2

Yup, you're almost done. How about ordering some pizza to reward yourself? The table top is basically the same size as a large pizza, just saying...you deserve it.

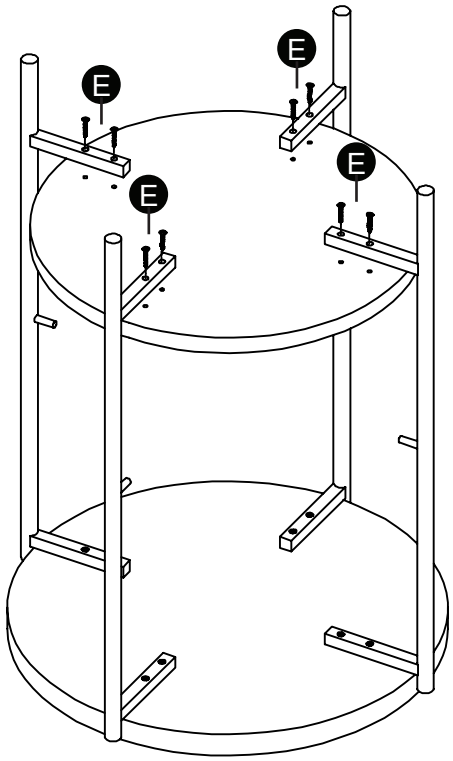

Step 3

We don't like wrinkles either!
The good news is, over time the wrinkles will smooth out, but if you're looking for quick results we would suggest the following:

Option 1

Use a steamer to remove wrinkles to make your basket look prestine.

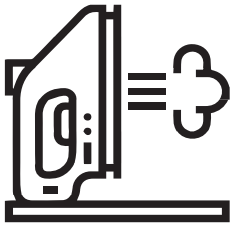

Option 2
Don't have a steamer? Step aside Iron Man.



This basket is 100% polyester, making it safe to iron. Using your ironing board, only iron the sides of the basket.

DO NOT iron the bottom of the basket because it is made of medium-density fibreboard materials.

We hope this has not invconvienced you & that you are happy with your table.
If you have any questions please don't hesitate to call or e-mail us!

1-866-619-1004 or help@nathanjames.com

Step 4

Flip it on over.

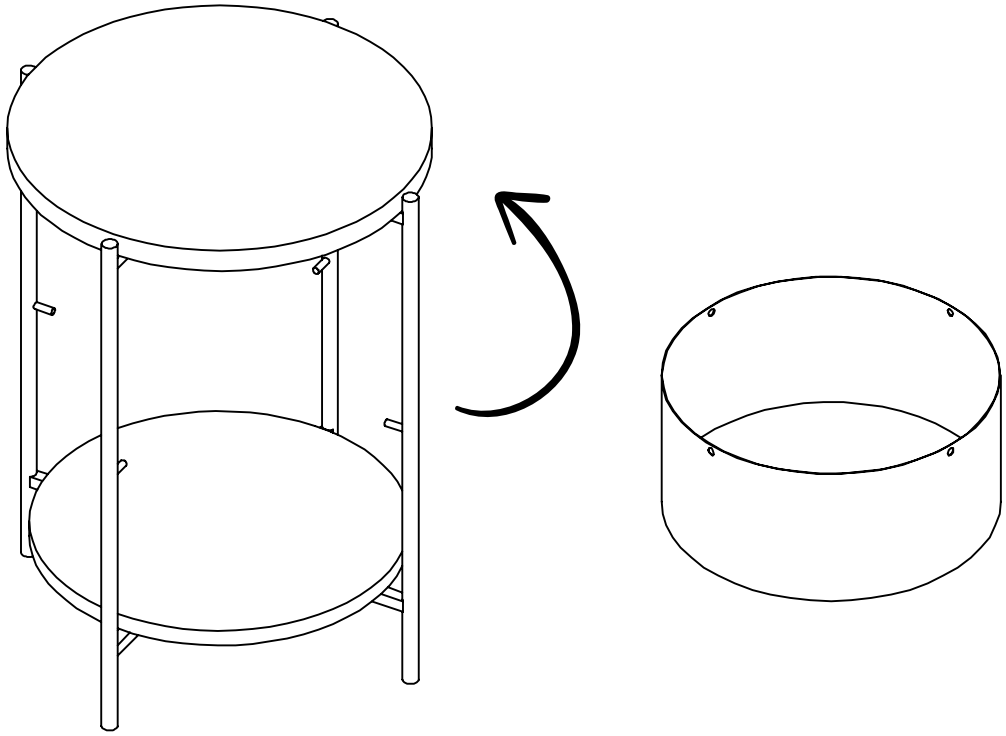

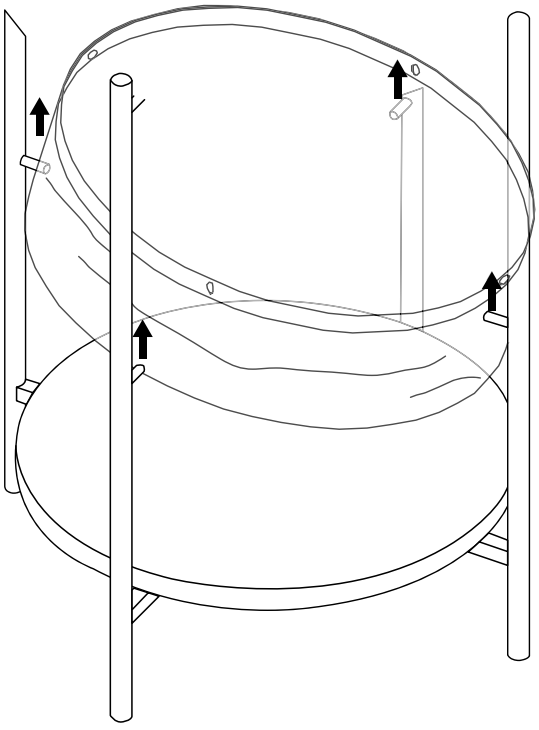

Tip from one friend to another:
When inserting the basket, we suggest tilting the basket on an angle and to keep the basket rail above little knobs for easy installation. Now time to chill!

No heartburn, when we handle the return

Give us a call **1-866-619-1004** or shoot us a message at **help@nathanjames.com** we will issue you a free replacement with **zero hassle**.

Our way


Give us a call


Replacement


You

Their way


Re-package item


Schedule pick up


Track package


Replacement


You

We really don't want you to go through the hassle of re-packaging your item and sending it back, because let's be honest...nobody has time for that.

Safety first, fun later

We want your Oraa Side Table to last as long as possible, so we recommend that you tighten the screws 2 weeks after assembly and for added safety check the tightness of all screws every 2 months.

For proper care and treatment of fabric & metal please check our website at **NathanJames.com/products**

Safe use of this product starts with you.

Use this side table responsibly with the primary concern for your safety. Follow assembly instructions carefully and inspect product upon receipt and each use.

Nathan James and its parent companies cannot be held legally responsible for any injuries or death resulted from failure to follow instructions or improper use of this product.

Do not modify the structure of this product in any way.

Our products have been tested to meet specific safety measures as they were originally intended to be sold. Any modifications will present the risk of creating significant safety issues which NJ will not be responsible for.

Proper use

DO NOT	use for commercial purposes
DO NOT	place on uneven floor or surfaces
DO NOT	sit or stand on side table
DO NOT	put hot serving liquid on table top
DO NOT	leave spilled liquid on table top
DO NOT	use table if damaged or broken
DO NOT	make temporary repairs
DO NOT	use outdoors

We are only in business if you're happy

For starters, thanks for being you.

Toll-free at 1-866-619-1004
Help@nathanjames.com
NathanJames.com/help

We do our best to ensure your furniture arrives without any problems, but occasionally mistakes happen—as humans we are imperfect beings. In the event that a part is damaged or missing, we will be more than happy to provide you with replacement part(s) for free.

Warranty

This product comes with a lifetime warranty from the date of purchase. Please use your phone to scan the QR code to register your product or visit **https://goo.gl/i9dk3q**

Did we do alright? Please spread the love!

If you are happy with your product, tell your friends and family about us or even better leave us a review online. Spreading the word gives us the opportunity to make more people happy and keep our prices low for your next purchase.

Brooklyn Burdon

Founder, Nathan James