Kenmore®/MD

French Door Refrigerator

32.3” width

18 cu. ft. / 507 L



Customer Assistance
1-800-265-8456
www. koolatron.com

KKFDR32.3X20-SS

Use & Care Guide

TABLE OF CONTENTS

IMPORTANT SAFEGUARDS	3
PRODUCT OVERVIEW	6
PRODUCT INSTALLATION	7
OPERATING INSTRUCTIONS	9
CARE AND MAINTENANCE	10
FOOD STORAGE TIPS	11
TROUBLESHOOTING GUIDE	12
WARRANTY	13

IMPORTANT SAFETY INSTRUCTIONS

ELECTRICAL SAFETY PRECAUTIONS

• This refrigerator uses a power supply voltage of 120V AC with a frequency of 60Hz and must be operated with a dedicated outlet that is above 10A. Never attempt to use the refrigerator with a voltage converter or an extension cord.

• This refrigerator is equipped with a grounded (3-prong) plug which must be used with a properly grounded 3-hole outlet. DO NOT remove the third pin (ground wire) or alter the plug in any way to make it fit into an ungrounded (2-hole) outlet.

• Whenever possible, the refrigerator should be transported upright. Before connecting the refrigerator to a power source, let it stand upright for at least 2 hours to reduce the possibility of a malfunction in the cooling system from handling during transit.

• Make sure that the plug is tightly connected to the outlet before using the appliance. Failure to do so could cause a fire or electric shock.

• When setting up or moving the refrigerator, be careful not to kink, crush, roll over, or otherwise damage the cord. DO NOT attempt to operate the refrigerator if there is wear or damage to the cord or plug. Have it immediately replaced by a qualified technician.

• To prevent electric shock, always unplug the appliance from the power source before cleaning, moving, or maintenance and during power failures. To unplug, grasp the plug and pull it from the electrical outlet; never unplug by pulling on the power cord.

• DO NOT spray water or other liquids directly inside the refrigerator or freezer during cleaning. Doing so could damage the electrical components or cause electric shock.



This symbol alerts you to take care as the appliance contains a flammable refrigerant.

• DO NOT expose the refrigerator to high heat, sparks or open flames.

• When transporting and setting up the refrigerator, be careful to avoid drops or impacts that could damage the refrigeration system and allow the refrigerant gas to escape.

IMPORTANT SAFETY INSTRUCTIONS

• If the refrigerant tubing is damaged in any way, immediately close the valve, open all doors and windows, and contact a qualified technician. **NOTE** - DO NOT unplug the appliance as this may generate a spark that could ignite the leaked gas.

• Never store flammable, explosive, or corrosive products in this appliance. Never use flammable substances to clean the refrigerator or freezer.

• DO NOT attempt to dismantle, alter, repair or replace any part of this refrigerator unless it is specifically recommended in this manual. All other servicing should be referred to a qualified technician.

OTHER SAFETY PRECAUTIONS

• Never use hard brushes, steel wool, abrasive substances (such as toothpaste), organic solvents (such as alcohol, acetone, or banana oil), boiling water, or strongly acidic or alkaline agents to clean your refrigerator.

• Always lift the refrigerator from the bottom. Never attempt to lift or move the refrigerator by holding the door.

• Do not store electrical appliances (such as microwave ovens), unstable or heavy objects, or containers of liquid on top of the refrigerator. Do not use any electrical appliances inside the refrigerator other than those recommended by the manufacturer.

• This appliance is classed as a household refrigerator. According to national standards, it is suitable for storing food only and may not be used for purposes such as storage of blood, drugs, or other biological/medical products.

• Do not store cans or glass bottles of liquid in the freezer as they could crack or explode when frozen.

• Avoid touching cold surfaces inside the freezer as doing so could cause frostbite.

• Children should be supervised to ensure that they do not play in the refrigerator. Do not let anyone climb, sit, stand or lean on the refrigerator or freezer doors.

• RISK OF CHILD ENTRAPMENT AND SUFFOCATION! Before disposing of or storing this or your old refrigerator, remove the door and door seal and leave all shelves in place to prevent children from easily climbing inside.

IMPORTANT SAFETY INSTRUCTIONS

RESPONSIBLE DISPOSAL OF THE APPLIANCE

• At the end of its working life, do not throw the refrigerator out with your household waste. Electrical and electronic appliances contain materials and substances which can be hazardous to the environment and human health if handled or disposed of incorrectly. Observe any local regulations regarding the disposal of electrical consumer goods and dispose of it appropriately for recycling and recovery of the refrigerant.

• This appliance contains the flammable refrigerant isobutane (R600a) and cyclopentane (R141b) in the cabinet insulation, and must be disposed of in a separate waste collection. Contact your local authorities for advice on recycling facilities in your area.

• To prevent misuse, the power cable should be cut off directly behind the refrigerator and the plug rendered useless before disposal.

SAVE THESE INSTRUCTIONS

WARNING! This product can expose you to chemicals including lead, which is known to the State of California to cause cancer, and bisphenol A (BPA) and lead which are known to the State of California to cause birth defects or other reproductive harm.
For more information go to www.P65Warnings.ca.gov.

PRODUCT OVERVIEW

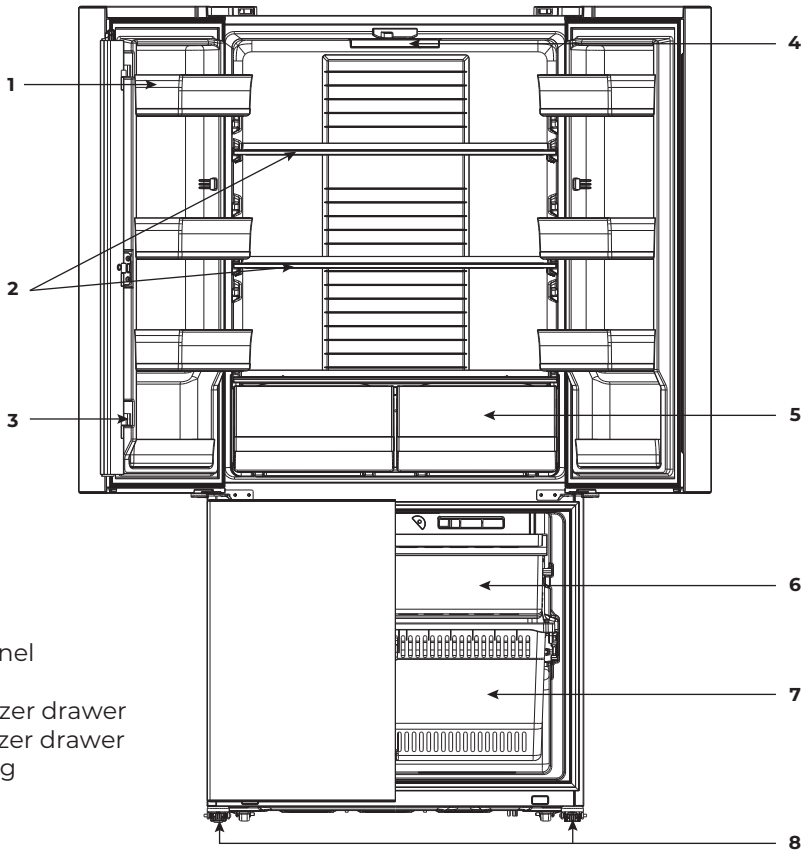

1. Door bin
2. Glass shelf
3. Flip beam
4. Control panel
5. Crisper
6. Upper freezer drawer
7. Lower freezer drawer
8. Leveling leg

PACKING LIST

8 pcs	Door bin
2 pcs	Crisper
1 pc	Upper freezer drawer
1 pc	Lower freezer drawer
2 pc	Glass shelf
1 pc	Owner's manual

NOTE - Products are subject to improvements from time to time which may result in changes to parts without notice.

SPECIFICATIONS AND PARAMETERS

Climate class	T
Electric shock protection type	I
Capacity	507 L
Voltage	120 V
Frequency	60 Hz
Current	2.5 A
Noise level	≤ 42 dBA
Refrigerant	R600a / 2.47 oz (70g)
Temperature range	
Freezer	≤ -0.4°F (-18°C)
Refrigerator	32 to 46.4°F (0 to 8°C)
Dimensions (WxDxH)	32.3" x 27.4" x 70" (820 x 685 x 1778 mm)

PRODUCT INSTALLATION

CHOOSING A LOCATION

• The refrigerator should be installed on a stable, level, uncarpeted surface that can support its weight when filled to capacity.

• Ensure that any material used to support or raise the refrigerator is stable and not flammable. The foam pallet from the packaging should not be used for this purpose.

• The refrigerator should be placed in a dry, well-ventilated area with a minimum of 4 in (10 cm) clearance at the back and sides and 12 in (30 cm) clearance above.

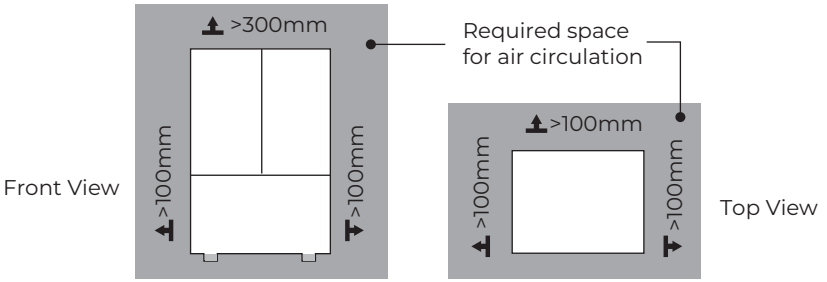

• The refrigerator should not be used outdoors or anywhere with an ambient temperature below 41°F (5°C). Avoid locations that are damp, humid, or exposed to the elements such as rain or snow.

• For optimal performance, the refrigerator should be positioned out of direct sunlight and away from all heat sources.

SETTING UP THE REFRIGERATOR

1. Place the refrigerator in your selected location and carefully remove and discard all packaging components, including the foam pallet.
2. Check that all parts and accessories are present and remove any adhesive tape, temporary labels, and stickers. Safely dispose of plastic bags or small pieces that could present a suffocation or choking hazard.
3. Adjust the leveling foot at the front of the refrigerator as needed to stabilize the unit. Turn the foot counterclockwise to increase the height and clockwise to decrease.

NOTE - Having a second person push backward against the top of the unit will take some weight off the leveling leg and make it easier to adjust.

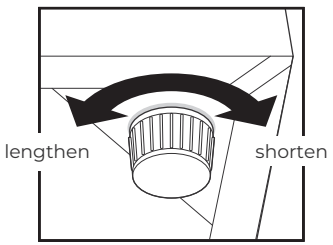

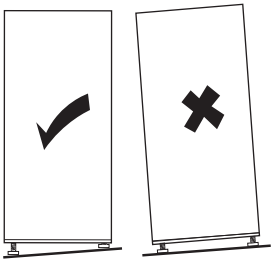

PRODUCT INSTALLATION

SETTING UP THE REFRIGERATOR (cont.)

4. Wipe the interior surfaces and accessories with a clean, damp cloth to remove any dirt or dust and dry thoroughly. Do not use abrasive cleansers or scouring pads.

DANGER! Never use flammable substances to clean the refrigerator or freezer.

5. Let the refrigerator stand for at least 2 hours and then plug the power cord into the outlet to turn it on.

NOTE - Let the refrigerator stand for at least 2 hours before plugging in to reduce the possibility of a malfunction in the cooling system from handling during transit.

6. Run the refrigerator and freezer with the doors closed for several hours to fully cool before placing any food inside.

NOTE - During the initial cooling period, the noise level may be higher than usual and the sides of the refrigerator may feel warmer.

ADJUSTING DOOR BINS

NOTE - Always empty bins before adjusting.

1. Slide the bin upwards and pull straight out to remove. Insert the bin above the desired position and push down into place to reinstall.

2. To reposition the bin, slide it up to above the desired position and push down into place.

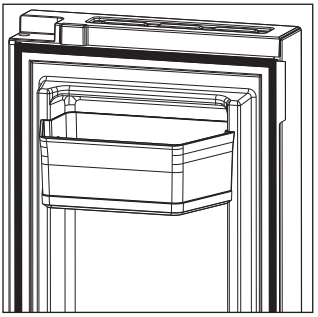

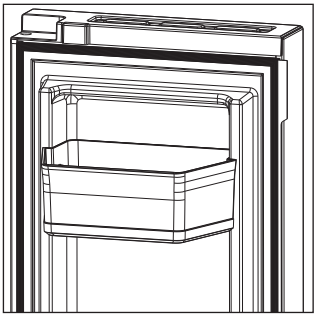

FLIP BEAM

• The flip beam seals the gap between the left and right refrigerator doors to prevent cool air from escaping.

• When closing the left door, make sure the flip beam is correctly positioned; otherwise the doors will not close properly and the flip beam could be damaged.

NOTE - To prevent condensation, the flip beam is equipped with a heater and may feel warm to the touch. This is normal and will not affect stored food.

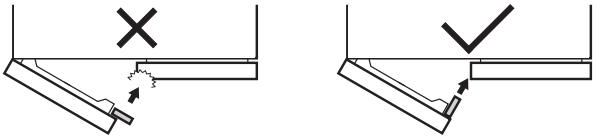

OPERATING INSTRUCTIONS

CONTROL PANEL

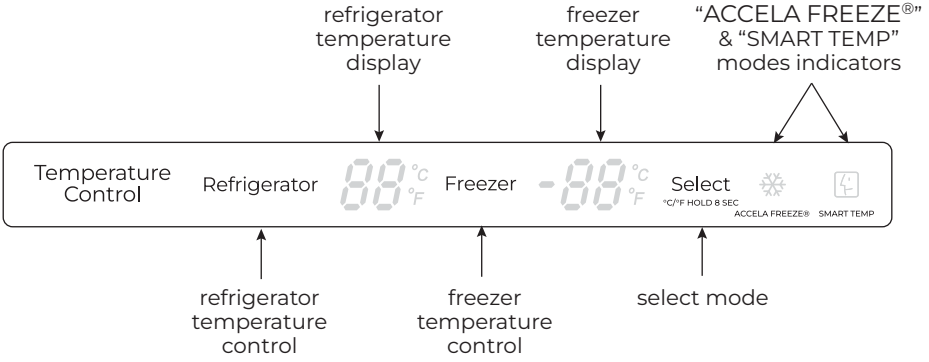

TEMPERATURE SETTING

1. Touch the Refrigerator or Freezer button once. A beep will sound, and the corresponding temperature display will start flashing.

2. Touch the Refrigerator or Freezer button repeatedly to cycle through the temperature range, stopping when you reach your desired temperature.

3. Wait 5 seconds for the display to stop flashing and the new temperature will be set.

ACCELA FREEZE® MODE

In ACCELA FREEZE® mode, the freezer temperature is reduced to -24°C (-11.2°F) for up to 24 hours. To enter, touch the Select button until the ❄ indicator starts flashing, then wait 5 seconds for it to stop flashing and stay solidly lit.

ACCELA FREEZE® mode will automatically end after 24 hours and the freezer will return to its previous setting. To exit sooner, touch the Select button until the ❄ indicator disappears.

SMART TEMP MODE

In SMART TEMP mode, the refrigerator and freezer will automatically adjust in response to the surrounding temperature to maintain stable temperatures inside the unit. To enter, touch the Select button until the indicator starts flashing, then wait 5 seconds for it to stop flashing and stay solidly lit. To exit, touch the Select button until the indicator disappears.

SWITCHING BETWEEN °C AND °F

To switch between Celsius (°C) and Fahrenheit (°F) units, press and hold the Select button for 8 seconds.

ADJUSTING HUMIDITY

Move the slider to the left or right to adjust the humidity in the fruit and vegetable crispers to suit different foods.

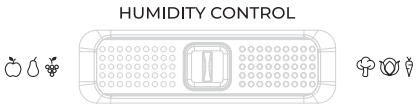

CARE AND MAINTENANCE

NOTE - This product is a frost-free refrigerator and does not require manual defrosting.

CLEANING

1. Before cleaning, always unplug the refrigerator from its power source. Grasp the plug and pull it from the electrical outlet; never unplug by pulling on the power cord.

2. Clean all inside and outside surfaces with a soft cloth, warm water, and mild detergent. Do not use any abrasive materials or corrosive cleaning agents.

DANGER! Never use flammable substances to clean the refrigerator or freezer.

NOTE - To protect the electrical components, do not spray water or cleaning agents inside the refrigerator or freezer.

3. Wipe the door gaskets with a soft cloth dipped in warm water and mild detergent and dry thoroughly.

4. Once or twice a year, vacuum the condenser cover and vents to remove dust.

CAUTION! Do not remove the panel covering the condenser coils.

MOVING AND STORAGE

• Before moving, unplug the refrigerator from its power source and remove all food.

• Remove or securely tape down any movable parts, such as shelves, drawers, and the power cord. Tape all doors closed and turn the leveling leg all the way up to the base.

• Transport the refrigerator upright whenever possible. If it must be tilted, do not incline it more than 45 degrees.

• Always lift the refrigerator from the bottom. Never attempt to lift or move the refrigerator by holding the door.

• DO NOT attempt to slide or drag the refrigerator as this could damage the unit and/or scratch the floor.

• Be careful to avoid drops or impacts that could damage the refrigeration system.

• Let the refrigerator stand upright for at least 2 hours before plugging it back in.

• Before storing the refrigerator for an extended period:

• Unplug the refrigerator and clean it thoroughly.

• Remove the doors to prevent unpleasant smells or mold from developing and reduce the risk of child entrapment and suffocation.

• Leave all shelves in place to prevent children from easily climbing inside.

CARE AND MAINTENANCE

POWER FAILURES

If you lose power or your refrigerator stops working:

• Keep the doors closed as much as possible to reduce the loss of cold air and do not add any more food to the refrigerator or freezer.

• Once power is restored, wait at least 5 minutes before plugging the refrigerator back in to avoid damage to the compressor.

• If a power outage is planned, lower the operating temperatures as much as possible and place water-tight containers filled with ice inside the refrigerator and freezer.

FOOD STORAGE TIPS

• Most refrigerators maintain an interior temperature of 4°C to 8°C (39°F to 46°F). At these temperatures, cooked meat should be stored no longer than 4 days and fruits and vegetables for no more than 1 week.

• Raw meat and seafood should be placed in separate containers and refrigerated for no longer than 3 days.

• To prevent bacterial contamination, fruits and vegetables which will be served raw must not be exposed to raw meat and fish.

• Do not overcrowd food. Leave space between items to allow cool air to circulate effectively and avoid blocking vents.

• Let hot food cool to room temperature before placing it in the refrigerator.

• To prevent cross-contamination, flavor transfer, and moisture loss, food should be separately packed or covered and placed on separate shelves. Fruit and vegetables do not need to be wrapped.

• To prevent freezer burn, wrap foods tightly in plastic wrap and then place in freezer-safe containers or plastic bags before freezing.

• Do not place unfrozen food in direct contact with food that is already stored and frozen. Do not add too many unfrozen items at once.

• Never store cans or glass bottles of liquid or carbonated drinks of any kind in the freezer as they could crack or explode when frozen.

• Package the food to be frozen as flat as possible to maximize storage space and facilitate freezing and thawing.

• Use food as soon as possible after thawing. Do not refreeze thawed foods.

• For the best taste and nutrition, use food within 3 months of freezing.

TROUBLESHOOTING GUIDE

You can solve many common appliance problems easily, saving you the cost of a possible service call. Try the suggestions below to see if you can solve the problem. If there is no improvement, call or email Koolatron Customer Assistance.

PROBLEM	POSSIBLE SOLUTIONS
Refrigerator does not turn on	• Check if it is plugged in • Make sure the power supply matches the rated voltage
Unpleasant smell in the refrigerator	• Check for and remove spoiled food • Make sure strong-smelling food is tightly wrapped • Clean the interior and accessories
Temperature is not low enough	• Check that door(s) are closed properly • Avoid frequent opening of the door(s) • Check for and move food blocking air vents • Vacuum condenser cover and vents to remove dust • Make sure refrigerator has adequate space at the back and sides and is not in direct sunlight or close to heat-producing appliances
Interior light is not working	• Make sure the refrigerator is plugged in • Check if the LED is damaged or needs replacing
Compressor runs for a long time or is unusually loud	• This is normal and expected if: - The refrigerator is first turned on - The weather is especially hot - The set temperature has just been decreased - A large amount of food has just been placed in the refrigerator or freezer • Check that door(s) are closed properly • Avoid frequent opening of the door(s)
Abnormal noise	• Check if the refrigerator is touching external objects or walls • Adjust the leveling leg to ensure the refrigerator is level

WARRANTY

1 Year
Limited Warranty

FOR ONE YEAR from the date of sale this product is warranted against defects in material or workmanship.

WITH PROOF OF SALE a defective product will be repaired or replaced free of charge.

The Kenmore brand is used under license. Direct all claims for warranty service to Kenmore Customer Assistance, call 1-800-265-8456 or email service@koolatron.com

This warranty covers manufacturer's defects including electrical and mechanical defects provided the appliance is correctly assembled, operated and maintained according to the supplied instructions. It does not cover damage caused by accident, misuse or abuse including overheating, unauthorized repairs or alterations, or use with a voltage converter or aftermarket accessories, and it does not apply to scratches, stains, discoloration or other surface damage that does not impair the product function. This warranty is void if the appliance is ever used for purposes other than private household use.

Koolatron Corporation
4320 Federal Drive, Batavia, NY 14020 U.S.A.
139 Copernicus Blvd., Brantford, ON N3P1N4 Canada

Kenmore and the Kenmore logo are registered trademarks to
Transform SR Brands LLC and are used under license by Koolatron Corporation

H1S441
08/2025-v4