

Wine storage compartment

[en] User manual

KU921...

Futher information and explanations are available online:

Table of contents

1 Safety 4
1.1 General information 4
1.2 Intended use 4
1.3 Restriction on user group 4
1.4 Safe transport 4
1.5 Safe installation 5
1.6 Safe use 6
1.7 Damaged appliance 7

2 Preventing material damage 8

3 Environmental protection and saving energy 8
3.1 Disposing of packaging 8
3.2 Saving energy 8

4 Installation and connection 8
4.1 Scope of delivery 8
4.2 Criteria for the installation location 9
4.3 Installing the appliance 9
4.4 Preparing the appliance for the first time 9
4.5 Connecting the appliance to the electricity supply 9

5 Familiarising yourself with your appliance 10
5.1 Appliance 10
5.2 Control panel 11

6 Features 12
6.1 Extendable bottle shelf 12
6.2 Bottle shelf 12

7 Basic operation 12
7.1 Switching on the appliance 12
7.2 Operating tips 12
7.3 Switching off the appliance 12
7.4 Setting the temperature 12
7.5 Button lock (childproof lock) 12

8 Additional functions 13
8.1 Interior lighting 13
8.2 Presentation mode 13

9 Alarm 13
9.1 Door alarm 13
9.2 Temperature alarm 13

10 Wine storage compartment 14
10.1 Arranging the maximum number of standard bottles 14
10.2 Tips for storing wine 14
10.3 Drinking temperatures 14

11 Defrosting 15
11.1 Defrosting in the wine storage compartment 15

12 Cleaning and servicing 15
12.1 Preparing the appliance for cleaning 15
12.2 Cleaning the appliance 15
12.3 Cleaning the condensation channel and drainage hole 16
12.4 Removing the fittings 16

13 Troubleshooting 17

14 Storage and disposal 19
14.1 Taking the appliance out of operation 19
14.2 Disposing of old appliance 19

15 Customer Service 19
15.1 Product number (E-Nr.) and production number (FD) 20

16 Technical data 20

1 Safety

Observe the following safety instructions.

1.1 General information

- Read this instruction manual carefully.
- Keep the instruction manual and the product information safe for future reference or for the next owner.
- Do not connect the appliance if it has been damaged in transit.

1.2 Intended use

Only use this appliance:
- For storing wine.
- In private households and in enclosed spaces in a domestic environment.
- Up to an altitude of 2000 m above sea level.

1.3 Restriction on user group

This appliance may be used by children aged 8 or over and by people who have reduced physical, sensory or mental abilities or inadequate experience and/or knowledge, provided that they are supervised or have been instructed on how to use the appliance safely and have understood the resulting dangers.
Do not let children play with the appliance.
Cleaning and user maintenance must not be performed by children unless they are being supervised.
Children above the age of three years old and younger than eight years old may load and unload the the fridge-freezer.

1.4 Safe transport

⚠ WARNING – Risk of injury!
The high weight of the appliance may result in injury when lifted.
▶ Do not lift the appliance on your own.

1.5 Safe installation

⚠ WARNING – Risk of electric shock!

Incorrect installation is dangerous.

- ▶ Connect and operate the appliance only in accordance with the specifications on the rating plate.
- ▶ Connect the appliance to a power supply with alternating current only via a properly installed socket with earthing.
- ▶ The protective conductor system of the domestic electrical installation must be properly installed.
- ▶ Never equip the appliance with an external switching device, e.g. a timer or remote control.
- ▶ When the appliance is installed, the mains plug of the power cord must be freely accessible. If free access is not possible, an all-pole isolating switch must be installed in the permanent electrical installation according to the installation regulations.
- ▶ When installing the appliance, check that the power cable is not trapped or damaged.

If the insulation of the power cord is damaged, this is dangerous.

- ▶ Never let the power cord come into contact with heat sources.

⚠ WARNING – Risk of explosion!

If the appliance's ventilation openings are sealed, a leak in the refrigeration circuit may result in a flammable mixture of gas and air.

- ▶ Keep ventilation openings, in the appliance enclosure or in the built-in structure, clear of obstruction.

⚠ WARNING – Risk of fire!

It is dangerous to use an extended power cord and non-approved adapters.

- ▶ Do not use extension cables or multiple socket strips.
- ▶ If the power cord is too short, contact Customer Service.
- ▶ Only use adapters approved by the manufacturer.

Portable multiple socket strips or portable power supply units may overheat and cause a fire.

- ▶ Do not place portable multiple socket strips or power supply units on the back of the appliance.

1.6 Safe use

⚠ WARNING – Risk of electric shock!
An ingress of moisture can cause an electric shock.
- ▶ Only use the appliance in enclosed spaces.
- ▶ Never expose the appliance to intense heat or humidity.
- ▶ Do not use steam- or high-pressure cleaners to clean the appliance.

⚠ WARNING – Risk of suffocation!
Children may put packaging material over their heads or wrap themselves up in it and suffocate.
- ▶ Keep packaging material away from children.
- ▶ Do not let children play with packaging material.

Children may breathe in or swallow small parts, causing them to suffocate.
- ▶ Keep small parts away from children.
- ▶ Do not let children play with small parts.

⚠ WARNING – Risk of explosion!
If the cooling circuit is damaged, flammable refrigerant may escape and explode.
- ▶ To accelerate the defrosting process, do not use any other mechanical devices or means other than those recommended by the manufacturer.
- ▶ If food is stuck to the freezer compartment, loosen it with a blunt implement such as the handle of a wooden spoon.

Products which contain flammable propellants and explosive substances may explode, e.g. spray cans.
- ▶ Do not store products which contain flammable propellants (e.g. spray cans) or explosive substances in the appliance.

⚠ WARNING – Risk of fire!
Electrical devices within the appliance may cause a fire, e.g. heaters or electric ice makers.
- ▶ Do not operate electrical devices within the appliance.

⚠ WARNING – Risk of injury!

Injury to the eyes caused by escaping flammable refrigerant and hazardous gases.

- ▶ Do not damage the tubes of the refrigerant circuit or the insulation.

1.7 Damaged appliance

⚠ WARNING – Risk of electric shock!

If the appliance or the power cord is damaged, this is dangerous.

- ▶ Never operate a damaged appliance.
- ▶ Never pull on the power cord to unplug the appliance. Always unplug the appliance at the mains.
- ▶ If the appliance or the power cord is damaged, immediately unplug the power cord or switch off the fuse in the fuse box.
- ▶ Call customer services. → *Page 19*

Incorrect repairs are dangerous.

- ▶ Repairs to the appliance should only be carried out by trained specialist staff.
- ▶ Only use genuine spare parts when repairing the appliance.
- ▶ If the power cord of this appliance is damaged, it must be replaced by the manufacturer, the manufacturer's Customer Service or a similarly qualified person in order to prevent any risk.

⚠ WARNING – Risk of fire!



If the tubes are damaged, flammable refrigerant and harmful gases may escape and ignite.

- ▶ Keep naked flames and ignition sources away from the appliance.
- ▶ Ventilate the room.
- ▶ Switch off the appliance. → *Page 12*
- ▶ Unplug the appliance from the mains or switch off the circuit breaker in the fuse box.
- ▶ Call after-sales service. → *Page 19*

2 Preventing material damage

ATTENTION!
Using the base, runners or appliance doors as a seat surface or climbing surface may damage the appliance.
- ▸ Do not stand or support yourself on the base, runners or doors.

Contamination with oil or fat may cause plastic parts and door seals to become porous.
- ▸ Keep plastic parts and door seals free of oil and grease.

3 Environmental protection and saving energy

3.1 Disposing of packaging

The packaging materials are environmentally compatible and can be recycled.
- ▸ Sort the individual components by type and dispose of them separately.

3.2 Saving energy

If you follow these instructions, your appliance will use less power.

Selecting the installation location
- Keep the appliance out of direct sunlight.
- Install the appliance as far away as possible from heating elements, cookers and other heat sources:
  - Maintain a 30 mm clearance to electric or gas cookers.
  - Maintain a 300 mm clearance to oil or solid-fuel cookers.
- Never cover or block the exterior ventilation grilles.

Saving energy during use

Note: The arrangement of the fittings does not affect the energy consumption of the appliance.
- Open the appliance only briefly and then close it carefully.
- Never cover or block the interior ventilation openings or the exterior ventilation grilles.

4 Installation and connection

4.1 Scope of delivery

After unpacking all parts, check for any transport damage and for completeness of delivery.
If you have any complaints, contact your dealer or our after-sales service → *Page 19*.

The delivery consists of the following:
- Built-under appliance
- Equipment and accessories[1]
- Installation material
- Installation instructions
- User manual
- Customer service directory
- Warranty enclosure[2]
- Energy label
- Information on energy consumption and noises

[1] Depending on the appliance specifications

[2] Not in all countries

4.2 Criteria for the installation location

⚠ WARNING
Risk of explosion!
If the appliance is in a space that is too small, a leak in the refrigeration circuit may result in a flammable mixture of gas and air.
- ▸ Only install the appliance in a space with a volume of at least 1 m^3 per 8 g refrigerant. The volume of refrigerant is indicated on the rating plate. → *"Appliance", Fig.* **1**/5, *Page 10*

The weight of the appliance ex works may be up to 50 kg depending on the model.
The subfloor must be sufficiently stable to bear the weight of the appliance.

Permitted room temperature

The permitted room temperature depends on the appliance's climate class.
The climate class can be found on the rating plate. → *"Appliance", Fig.* **1**/5, *Page 10*

Climate class	Permitted room temperature
SN	10 °C to 32 °C
N	16 °C to 32 °C
ST	16 °C to 38 °C
T	16 °C to 43 °C

The appliance is fully functional within the permitted room temperature.
If an appliance with climate class SN is operated at colder room temperatures, the appliance will not be damaged up to a room temperature of 5 °C.

4.3 Installing the appliance

- ▸ Install the appliance in accordance with the enclosed installation instructions.

4.4 Preparing the appliance for the first time

1. Remove the informative material.
2. Remove the protective foil and transit bolts, e.g. remove the adhesive strips and carton.
3. Clean the appliance for the first time. → *Page 15*

4.5 Connecting the appliance to the electricity supply

1. Insert the mains plug of the appliance's power cable in a socket nearby.
   The connection data of the appliance can be found on the rating plate. → *"Appliance", Fig.* **1**/5, *Page 10*
2. Check the mains plug is inserted properly.

✔ The appliance is now ready for use.

5 Familiarising yourself with your appliance

5.1 Appliance

You can find an overview of the parts of your appliance here.

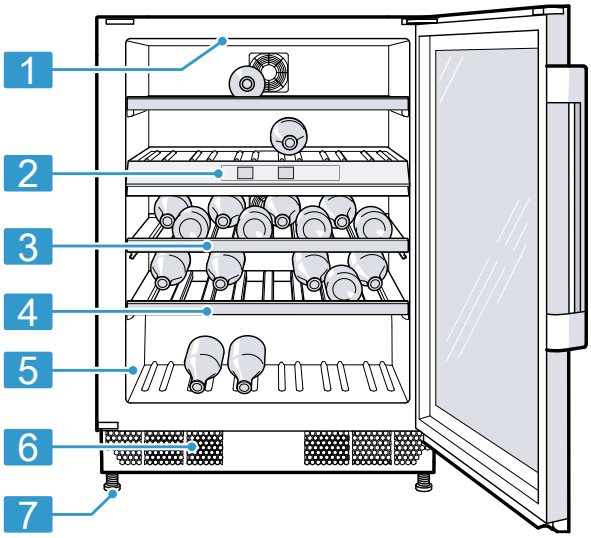

1

1	Interior lighting
2	Control panel → *Page 11*
3	Extendable bottle shelf → *Page 12*
4	Bottle shelf
5	Rating plate → *Page 20*
6	Exterior ventilation grille

7	Screw foot

Note: Deviations between your appliance and the diagrams may differ with regard to their features and size.

5.2 Control panel

You can use the control panel to configure all functions of your appliance and to obtain information about the operating status.

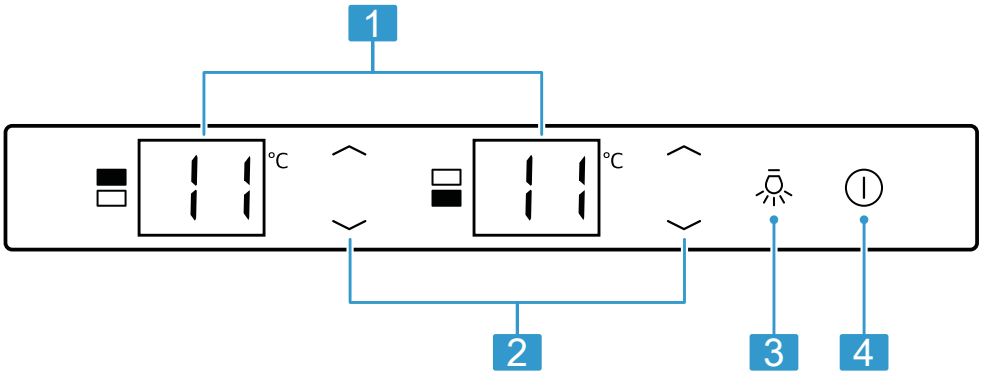

2

1	Displays the set temperature of the wine-storage compartment °C.
2	⌣/⌢ sets the temperature of the wine storage compartment.
3	☼ switches the interior lighting on or off.
4	⏻ switches the appliance on or off.

6 Features

The features of your appliance depend on the model.

6.1 Extendable bottle shelf

In order to achieve an improved overview and to remove bottles more quickly, pull out the extendable bottle shelf.

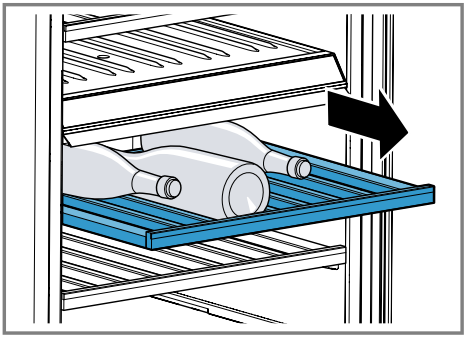

6.2 Bottle shelf

Store bottles securely on the bottle shelf.
To store the maximum number of bottles, you can remove the bottle trays.
→ *"Removing the bottle shelf", Page 16*

7 Basic operation

7.1 Switching on the appliance

1. Electrically connect the appliance.
→ *Page 9*

   Note: If the appliance has been previously switched off using the control panel, press ⏻.

✔ The appliance begins to cool.

2. Set the required temperature.
→ *Page 12*

7.2 Operating tips

- Once you have switched on the appliance, the set temperature is only reached after several hours.
- When you close the door, a vacuum may be created. The door is then difficult to open again. Wait a moment until the vacuum is offset.

7.3 Switching off the appliance

▸ Press ⏻.

7.4 Setting the temperature

Setting the temperature of the wine storage compartment

▸ Press ﹀/﹀ repeatedly until the temperature display shows the required temperature.

Note: If you press and hold ﹀/﹀ for a longer time, the temperature value changes continuously.

7.5 Button lock (childproof lock)

The button lock prevents the appliance from being operated accidentally or incorrectly while running.

Switching on the button lock

▸ Press and hold ﹀ (🔒) + ﹀ (🔒) at the same time for three seconds.

✔ The temperature displays show CL and On for three seconds, then the temperature that was previously set is displayed again.

Note: If you press a touch field while the button lock is switched on, the temperature display indicates CL for three seconds.

Switching off the button lock

- ▸ Press and hold ﹀ (▬) + ﹀ (▬) at the same time for three seconds.
- ✔ The temperature displays show CL and OF for three seconds, then the temperature that was previously set is displayed again.

8 Additional functions

8.1 Interior lighting

The interior lighting switches on automatically when you open the appliance.

Tip: If the interior lighting is switched on when the door is closed too, you can switch on the presentation mode.

Switching on the interior lighting

- ▸ Press ☼.

Switching off the interior lighting

- ▸ Press ☼.
- ✔ The interior lighting is permanently switched off.

8.2 Presentation mode

In presentation mode, the interior lighting is permanently switched on.

Switching on the presentation mode

- ▸ Press and hold ☼ for three seconds.
- ✔ The interior lighting remains switched on, even if the appliance door is closed.

Switching off the presentation mode

- ▸ Press and hold ☼ for three seconds.

9 Alarm

9.1 Door alarm

If the appliance door is open for a while, the door alarm switches on.

Switching off the door alarm

- ▸ Close the appliance door.
- ✔ The warning tone is switched off.

9.2 Temperature alarm

If the wine storage compartment is too warm or too cold for an extended period, the temperature alarm switches on.

If the temperature in a wine storage compartment lies more than 2 °C below the set temperature for an extended period, a warning signal sounds and LO flashes in the corresponding temperature display.
If the temperature in a wine storage compartment lies more than 5 °C above the set temperature for an extended period, a warning signal sounds and HI flashes in the corresponding temperature display.

Switching off the temperature alarm

- ▸ Press any touch field.
- ✔ The warning tone is switched off.

Note: LO or HI flashes until the set temperature is reached again.

10 Wine storage compartment

In the wine storage compartment, you store wine at a constant temperature.
You can set the temperature in the wine storage compartment from 5 °C to 20 °C.

10.1 Arranging the maximum number of standard bottles

▸ To place the maximum number of bottles in the appliance, place wine bottles into the appliance laying down with the neck of the bottle facing forwards.

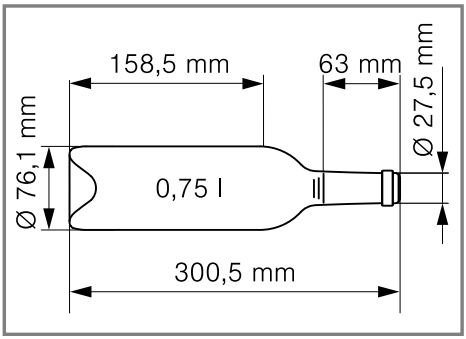

Standard bottle

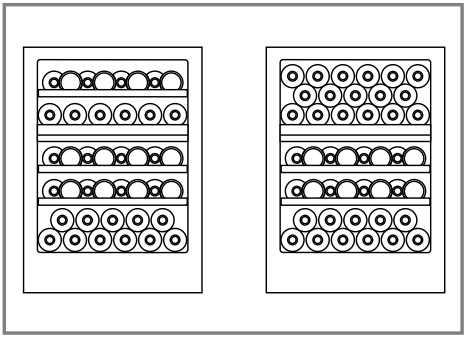

Storage example with 41 standard bottles and 44 standard bottles

Note: If you remove the top bottle tray, instead of 41 standard bottles, you can place a total of 44 standard bottles in the appliance.

10.2 Tips for storing wine

Note the following tips for storing wine.

- Do not store the wine bottles in crates or boxes in the appliance. The open bottle shelves allow for continuous air circulation. As a result, excess humidity is quickly removed.
- Before you enjoy your wine, you should slowly warm it to room temperature. Take rosé out of the appliance two to five hours before consuming, and take red wine out of the appliance four to five hours before consuming. Serve white wine immediately after taking it out of the appliance. Sparkling wine and champagne should be chilled in the refrigerator for a short while before drinking.
- Always store wine a little cooler than its ideal serving temperature, as the wine warms up as soon as it is poured into the glass.

10.3 Drinking temperatures

The correct serving temperature is crucial for the taste of the wine.

Type of wine	Drinking temperature
Full-bodied red Bordeaux	18 °C
Côtes du Rhône red, Barolo	17 °C
Full-bodied red Burgundy, red Bordeaux	16 °C
Port	15 °C
Young red Burgundy	14 °C

Type of wine	Drinking temperature
Young red wines	12 °C
Young Beaujolais, all white wines with little residual sugar	11 °C
Old white wines, full-bodied Chardonnay	10 °C
Sherry	9 °C
Young white wines, from late vintage onward	8 °C
Loire, Entre-deux-Mers white wines	7 °C

11 Defrosting

11.1 Defrosting in the wine storage compartment

When the appliance is operating, condensation droplets or frost form on the rear panel of the wine storage compartment due to functional reasons. The back panel in the wine storage compartment defrosts automatically.
The condensation drains into the drainage hole via the condensation channel.
To ensure that the condensation can drain and odours do not form, observe the following information:
→ *"Cleaning the condensation channel and drainage hole", Page 16*.

12 Cleaning and servicing

To keep your appliance working efficiently for a long time, it is important to clean and maintain it carefully. Customer Service must clean inaccessible points. Cleaning by customer service can give rise to costs.

12.1 Preparing the appliance for cleaning

1. Switch off the appliance.
   → *Page 12*
2. Disconnect the appliance from the power supply.

   Unplug the appliance from the mains or switch off the circuit breaker in the fuse box.
3. Take out all bottles and store them in a cool place.
4. Remove all fittings and accessories from the appliance.
   → *Page 16*

12.2 Cleaning the appliance

⚠ WARNING
Risk of electric shock!
An ingress of moisture can cause an electric shock.
- ▸ Do not use steam- or high-pressure cleaners to clean the appliance.

Liquid in the lighting or in the controls can be dangerous.
- ▸ The rinsing water must not drip into the lighting or controls.

ATTENTION!
Unsuitable cleaning products may damage the surfaces of the appliance.
- ▸ Do not use hard scouring pads or cleaning sponges.

- ▸ Do not use harsh or abrasive detergents.
- ▸ Do not use cleaning products with a high alcohol content.

If liquid gets into the drainage hole, the evaporation pan may overflow.

- ▸ The rinsing water must not get into the drainage hole.

If you clean fittings and accessories in the dishwasher, this may cause them to become deformed or discolour.

- ▸ Never clean fittings and accessory in the dishwasher.

1. Prepare the appliance for cleaning. → *Page 15*
2. Clean the appliance, the fittings, the accessories and the door seals with a dish cloth, lukewarm water and a little pH-neutral washing-up liquid.
3. Dry thoroughly with a soft, dry cloth.
4. Insert the fittings.
5. Electrically connect the appliance.

12.3 Cleaning the condensation channel and drainage hole

Regularly clean the condensation channel and drainage hole to ensure that the condensation can drain.

- ▸ Carefully clean the condensation channel and the drainage hole, e.g. using a moistened cotton bud.

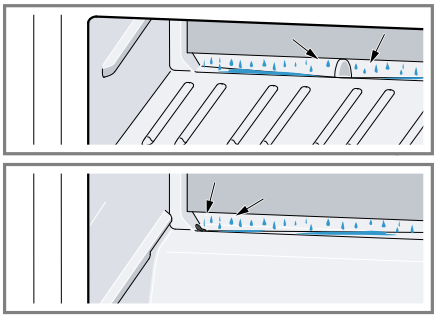

12.4 Removing the fittings

If you want to clean the fittings thoroughly, remove these from your appliance.

Removing the bottle shelf

- ▸ Slightly lift the rear of the bottle shelf ① and remove it ②.

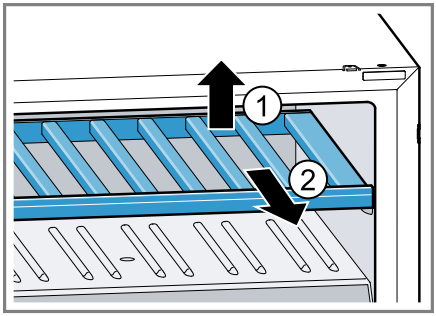

13 Troubleshooting

You can rectify minor faults on your appliance yourself. Read the troubleshooting information before contacting after-sales service. This will avoid unnecessary costs.

⚠ **WARNING**

Risk of electric shock!

Incorrect repairs are dangerous.

- Repairs to the appliance should only be carried out by trained specialist staff.
- Only use genuine spare parts when repairing the appliance.
- If the power cord of this appliance is damaged, it must be replaced by the manufacturer, the manufacturer's Customer Service or a similarly qualified person in order to prevent any risk.

Fault	Cause and troubleshooting
The appliance is not cooling, the displays and lighting are lit.	Showroom mode is switched on. 1. Press and hold ︿ (▤) + ☼ at the same time until dE and OF flash in the temperature displays. 2. After a short time, check whether your appliance is cooling.
The LED lighting does not work.	Different causes are possible. ▸ Call customer service. The customer service number can be found in the enclosed customer service directory.
E or d appears in the temperature display.	The electronics have detected a fault. 1. Switch off the appliance. → *Page 12* 2. Disconnect the appliance from the mains. Unplug the appliance from the mains or switch off the circuit breaker in the fuse box. 3. Reconnect the appliance after five minutes. 4. If the message still appears on the display, call customer service. The customer service number can be found in the enclosed customer service directory.
CL appears in the temperature display.	The button lock is switched on. ▸ Switch off the button lock. → *Page 13*
A warning signal sounds and HI flashes in the temperature display.	It was too warm in the wine storage compartment for an extended period. ▸ Press any touch field. **Note:** HI flashes until the set temperature is reached again.

Fault	Cause and troubleshooting
A warning signal sounds and HI flashes in the temperature display.	The exterior ventilation grilles are blocked. ▸ Remove any obstructions from in front of the exterior ventilation grilles.
A warning signal sounds and LO flashes in the temperature display.	It was too cold in the wine storage compartment for an extended period. ▸ Press any touch field. **Note:** LO flashes until the set temperature is reached again.
The temperature differs greatly from the setting.	Different causes are possible. **1.** Switch off the appliance. → *Page 12* **2.** Switch the appliance back on after five minutes. → *Page 12* – If the temperature is too warm, check the temperature again after a couple of hours. – If the temperature is too cold, check the temperature again on the following day.
The base of the wine storage compartment is wet.	The condensation channel or drainage hole are blocked. ▸ Clean the condensation channel and the drainage hole. → *Page 16*
The appliance hums, bubbles, buzzes, gargles or clicks.	Not a fault. A motor is running, e.g. refrigerating unit, fan. Refrigerant flows through the pipes. The motor, switches or solenoid valves are switching on or off. No action required.
The appliance makes noises.	Fittings wobble or stick. ▸ Check the removable fittings and, if required, replace these.

14 Storage and disposal

You can find out here how to prepare your appliance for storage. You will also find out how to dispose of old appliances.

14.1 Taking the appliance out of operation

1. Switch off the appliance. → *Page 12*
2. Disconnect the appliance from the power supply.

   Unplug the appliance from the mains or switch off the circuit breaker in the fuse box.
3. Clean the appliance. → *Page 15*
4. To guarantee the ventilation inside the appliance, leave the appliance open.

14.2 Disposing of old appliance

Valuable raw materials can be reused by recycling.

⚠ WARNING
Risk of harm to health!
Children can lock themselves in the appliance, thereby putting their lives at risk.
- ▶ Leave shelves and containers inside the appliance to prevent children from climbing in.
- ▶ Keep children away from the redundant appliance.

⚠ WARNING
Risk of fire!
If the tubes are damaged, flammable refrigerant and harmful gases may escape and ignite.
- ▶ Do not damage the tubes of the refrigerant circuit or the insulation.

1. Unplug the appliance from the mains.
2. Cut through the power cord.
3. Dispose of the appliance in an environmentally friendly manner.

   Information about current disposal methods are available from your specialist dealer or local authority.



This appliance is labelled in accordance with European Directive 2012/19/EU concerning used electrical and electronic appliances (waste electrical and electronic equipment - WEEE). The guideline determines the framework for the return and recycling of used appliances as applicable throughout the EU.

15 Customer Service

If you have any queries, are unable to rectify faults on the appliance yourself or if your appliance needs to be repaired, contact Customer Service. Function-relevant genuine spare parts according to the corresponding Ecodesign Order can be obtained from Customer Service for a period of at least 10 years from the date on which your appliance was placed on the market within the European Economic Area.

Note: Under the terms of the manufacturer's warranty applicable to the location, the use of Customer Service is free of charge. The minimum duration of the warranty (manufacturer's warranty for private consumers) in the European Economic Area is 2 years according to the terms of war-

ranty applicable to the location. The terms of warranty do not affect other rights or claims held by yourself under local legislation.

Detailed information on the warranty period and terms of warranty in your country is available from our after-sales service, your retailer or on our website.
If you contact Customer Service, you will require the product number (E-Nr.) and the production number (FD) of your appliance.
The contact details for Customer Service can be found in the enclosed Customer Service directory or on our website.

15.1 Product number (E-Nr.) and production number (FD)

You can find the product number (E-Nr.) and the production number (FD) on the appliance's rating plate.
→ *"Appliance", Fig.* **1**/5, *Page 10*
Make a note of your appliance's details and the Customer Service telephone number to find them again quickly.

16 Technical data

Refrigerant, cubic capacity and further technical specifications can be found on the rating plate.
→ *"Appliance", Fig.* **1**/5, *Page 10*
This product contains a light source from energy efficiency class F. The light source is available as a spare part and should only be replaced by trained specialist staff.

This product contains a second light source from energy efficiency class F. The light source is available as a spare part and should only be replaced by trained specialist staff.
You can find more information about your model online at https://eprel.ec.europa.eu/[1]. This web address is linked to the official EU EPREL product database. Please then follow the instructions on searching for the model. The model identifier is made up of the characters before the slash in the product number (E-Nr.) on the rating plate. Alternatively, you can also find the model identifier in the first line of the EU energy label.

[1] Only applies to countries in the European Economic Area



Constructa-Neff Vertriebs-GmbH
Carl-Wery-Straße 34
81739 München
GERMANY
Valid within Great Britain:
Imported to Great Britain by
BSH Home Appliances Ltd.
Grand Union House
Old Wolverton Road
Wolverton, Milton Keynes
MK12 5PT
United Kingdom

REGISTER YOUR PRODUCT
ONLINE NEFF-HOME.COM

9001689418
en
011129