Criterion®

User's Manual

Upright Freezer

*** Convertible to Refrigerator Mode**

14.0 cu.ft.(CUF14P1W) · 17.0 cu.ft.(CUF17P1W) · 20.2 cu.ft.(CUF20P1W)

BEFORE USING YOUR PRODUCT:

Please read this manual carefully and follow all safety rules & operating instructions.Keep this manual for future reference.

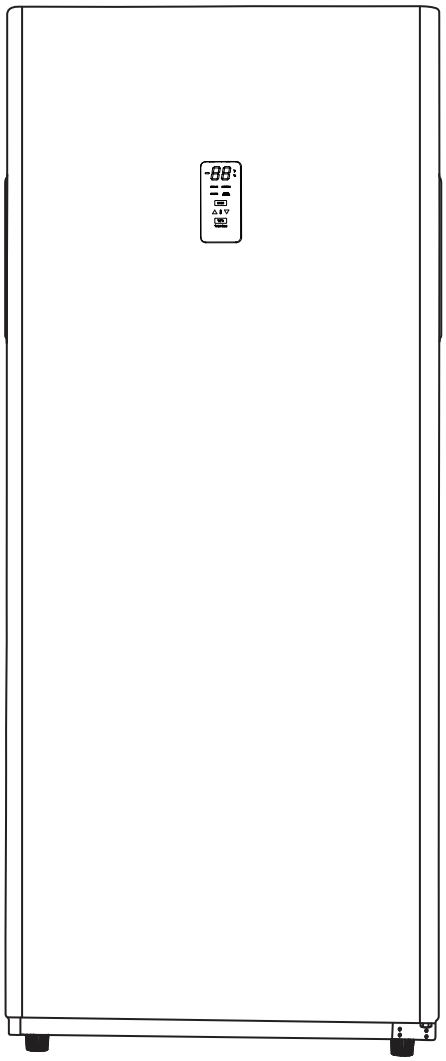

OPERATION MANUAL

Service Support

833-953-1758

24445 Northwestern Hwy, Ste. 101,

Southfield, MI 48075 833-953-1758

Criterion@customer-appliance.com

Table of Contents

Important Safety Instructions 3
Upright Freezer Overview 6
Installing Your New Appliance 7
Display Controls 10
Cleaning and Care 11
Helpful Hints and Tips 12
Trobleshooting 13
Disposal of the appliance 15

IMPORTANT

1. Please read Owner's Manual.
2. Stand Refrigerator or Freezer upright for 24 hours and level appliance prior to plugging in.
3. DO NOT RETURN TO STORE before calling Customer Service with questions or problems.

For questions or assistance, please contact Customer Service at: 1-833-953-1758 between 8:00 am and 4:00 pm EST or email: Criterion@customer-appliance.com

Important Safety Instructions

Read and follow all safety messages. Save these instructions.



This safety alert symbol will help you understand situations and hazards that may cause injury or death.

⚠ WARNING The WARNING alert means a potentially hazardous situation. Serious injury or death may occur if not avoided.

⚠ DANGER The DANGER alert means an imminently hazardous situation. Serious injury or death may occur if not avoided.

⚠ CAUTION The CAUTION alert means a potentially hazardous situation. Moderate or minor injury may occur if not avoided.

⚠ WARNING

1. Please ensure that everyone using this appliance is familiar with its operations and safety features. This appliance is not intended for use by persons (including children) with reduced physical, sensory or mental capabilities, unless supervised or properly instructed.

2. This appliance is intended to be used in residential households and similar applications.

3. Keep explosive and flammable substances away from unit, Do not store these materials in the upright freezer.

4. Disconnect power before servicing or installing an Ice Maker.

5. Use nonflammable cleaner.

6. Use 2 or more people to remove old unit and install this unit.

7. Do not use mechanical devices or other means to accelerate the defrosting process, other than those recommended by the manufacturer.

8. Do not damage the refrigerant circuit.

9. The instructions include the following wording regarding the use of extension cords:
Do not use an extension cord or ungrounded (two prong) adapters.
If the supply cord is damaged, it must be replaced by the manufacturer, its service agent or similarly qualified persons in order to avoid a hazard.

10. Keep ventilation openings, in the appliance enclosure or in the built-in structure, clear of obstruction.

⚠ DANGER

To avoid the risks that are always present when using an electric appliance, we recommend that you pay attention to the instructions about electricity below.

1. The appliance requires single phase I15V/60Hz power supply. It has a power cord that has a 3-prong grounding plug that minimizes the possibility of electrical shock. This appliance must be grounded. Do not remove the grounding prong or modify the power plug.

2. The unit should be plugged into a dedicated electrical outlet that meets all current standards and requirements. Do not plug anything else into the same outlet and ensure the appliance is the only thing plugged into the entire circuit. It should have its own dedicated breaker. Otherwise, this may overload the circuit and cause a fire.

3. Do not modify the power piug. The power plug must be accessible when the appliance is installed.

4.The appliance should not be turned off with a switch or other device.

5. Make sure that the plug is not squashed or damaged. Otherwise, it may cause short circuit, electric shock or overheat and even cause a fire.

6. Do not insert the power plug if the socket is loose, there is a risk of electric shock or fire.

7. Switch off the appliance and disconnect it from the main power before you clean or move it.

8. Never unplug the appliance by pulling on the electrical cord. Always grip the plug firmly and pull straight out from the socket to prevent damaging the power cord.

9. Do not operate the appliance without the cover over the interior lighting.

10. Any electrical component must be replaced or repaired by a qualified electrician or authorized service engineer. Only genuine replacement parts should be used.

11. To avoid eye injury. do not look directly at the LED light on the top of upright freezer compartment. If it is not functioning correctly, consult a qualified, registered electrician or replace it in accordance with the Cleaning and Care chapter.

12. The refrigerant isobutane (R600a) is contained within the refrigerant circuit of the appliance. During transportation and installation of the appliance, ensure that none of the components of the refrigerant circuit become damaged. The refrigerant (R600a) is flammable.

13. Risk of child entrapment. Before you throw away your old appliance:
Take off the doors.
Leave the shelves in place so that children may not easily climb inside.

⚠ CAUTION

1. Don't store products which contain flammable propellants (e.g. spray cans) or explosive substances in the appliances.

2. Avoid open flames (candles, lamps etc.) and other sources of ignition.

3. Thoroughly ventilate the room in which the appliance is situated.

4. Unpack and check through the appliance. Should any damage be evident, dont plug In the appliance but contact the shop immediately from which you purchased it. Keep all packing materials in this case.

5. We recommend that you wait for at least 4 hours before connecting the appliance to allow the refrigerant to flow back into the compressor.

General safety and daily use

It is important to use your appliance safely. We recommend that you follow the guidelines below.

We recommend that you keep this users manual with the appliance for future reference.

This appliance is intended to be used in households and similar applications such as:

-Staff kitchen-areas in shops, offices and other working environments:
-Clients in hotels, motels and other residential environment;
-Bed and breakfast environments;
-Catering and similar non-retail applications.

Children should be supervised to ensure that they do not play with the appliance and given instruction regarding proper use of the appliance.

Store any food in accordance with the storage instructions from the manufacturer.

Don't try to repair the appliance yourself. It is dangerous to alter the specifications or modify this product in any way. Any damage to the power cord may cause a short circuit, fire or electric shock.

Don't place too much food directly against the air outlet on the rear wall of both the refrigerator and freezer compartment, as it may affect sufficient air circulation.

Don't place hot items near the plastic components of this appliance.

Frozen food should not be refrozen once it has been thawed out.

Don't store bottled or canned drinks (especially carbonated drinks) in the freezer compartment. Bottles and cans may explode.

Use caution consuming popsicles or ice cubes straight from the freezer as this can cause freezer burn to the mouth and lips.

Child Safety

Keep all packaging away from children to avoid risk of suffocation.

Protect children from being scalded by touching the compressor at the rear bottom of appliance.

Dont place items on top of the appliance as this could cause injury should they fall off.

Never allow children to play with the appliance by hanging or standing over or on the doors, racks, shelves and drawers, etc.

Upright Freezer Overview

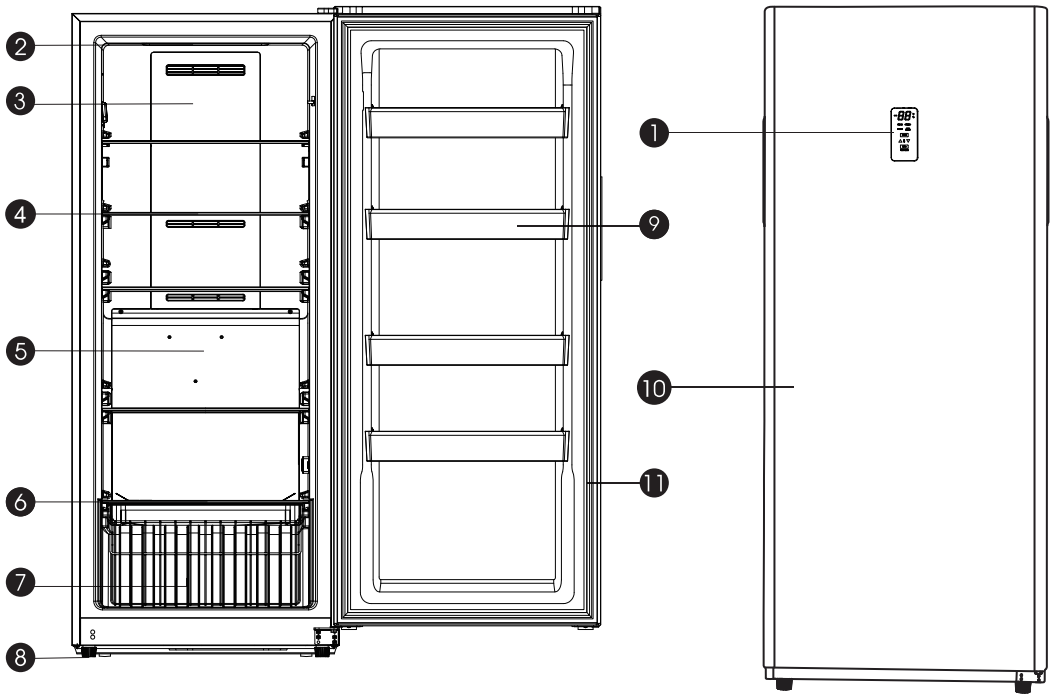

1. Display panel (FRONT)
2. Led Light
3. Windward
4. Glass shelf1
5. Downwind
6. Glass shelf2
7. Basket
8. Adjustable Feet
9. Door Rack
10. Door
11. Door Gasket



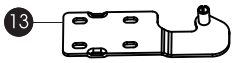

Package Contents

12. Upper Left Hinge Cover
13. Upper Left Hinge

model	SKU	Capacity	Door shelf
CUF14P1W	453-6076	14 cu.ft	4 pcs
CUF17P1W	453-6077	17 cu.ft	4 pcs
CUF20P1W	453-6078	20.2 cu.ft	5 pcs

NOTE: This manual applies to models CUF14P1W, CUF17P1W and CUF20P1W. The only difference is the number of accessories included; the operation and appearance are identical.

⚠ NOTE

- Due to unceasing modification of our products, your upright freezer may be slightly different from this instruction manual, but its functions and using methods remain the same.
- To get the best energy efficiency of this product, please place all shelves, drawers and baskets on their original position as the illustration above.

Installing Your New Appliance

LOCATION

Two people should be used when moving the appliance.

1. Remove interior and exterior packaging prior to installation. Wipe the outside of the appliance with a soft, dry cloth and the inside with a lukewarm wet cloth.

2. Place the appliance on a floor that is strong enough to support it when it is fully loaded.

3. Do not place the appliance in direct sunlight or near sources of heat, such as a stove or heater, as this can increase electrical consumption. Extreme cold ambient temperatures may also cause the appliance to perform improperly.

4. Do not use the appliance near water, for example in a wet basement or near a sink.

5. This appliance is intended for household use only.

6. Before connecting the appliance to a power source, let it stand upright for approximately at least 6 hours. This will reduce the possibility of a malfunction in the cooling system from handling during transportation.

7. 14 CU.FT Upright Freezer is 71.0 cm (27.95 inches) wide by 172.8 cm (68.03 inches) high by 70.9 cm (27.9 inches) deep.
17 CU.FT Upright Freezer is 71.0 cm (27.95 inches) wide by 172.8 cm (68.03 inches) high by 80.9 cm (31.85 inches) deep.
20.2 CU.FT Upright Freezer is 83.0 cm (32.68 inches) wide by 183.9 cm (72.40 inches) high by 74.4 cm (29.29 inches) deep.
Make sure that you leave the minimum amount of space between the appliance and all surrounding walls and vents.Do not cover any ventilation openings, as the appliance requires adequate space for proper airflow.

8. Allow 12.7 cm (5 inches) of space between the back, sides and top of the appliance and all adjacent walls.

9. This appliance is intended for free-standing installation only and is not intended to be built into a cabinet or counter. Building in this appliance can cause it to malfunction.

LEVELING INSTRUCTIONS

There are two adjustable feet on the bottom of the appliance that can be turned up or down to ensure that the appliance is level.
Turn the adjustable foot counter-clockwise as far as it will go, until the top of the foot is touching the bottom of the chassis.
Slowly turn the adjustable foot clockwise until the appliance is level.

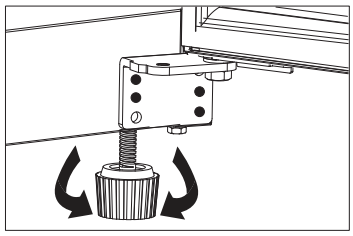

DOOR REVERSAL INSTRUCTIONS

If the appliance is placed on its back or side for any length of time during this process, it must be allowed to remain upright for at least 6 hours before plugging it in to avoid damage to the internal components.

WARNING: Before door reversal, make sure to unplug the unit and place the door face up. To avoid personal and property damage, use two people to remove and replace the door. It is suggested to replace the door by authorized service personnel. Please keep the removed parts for the door reversal and close the door tightly.

● For 14 CU.FT Upright Freezer MODEL:CUF14P1W(453-6076) & 17 CU.FT Upright Freezer MODEL:CUF17P1W(453-6077), follow these steps:

STEP1： Replace top door hinge

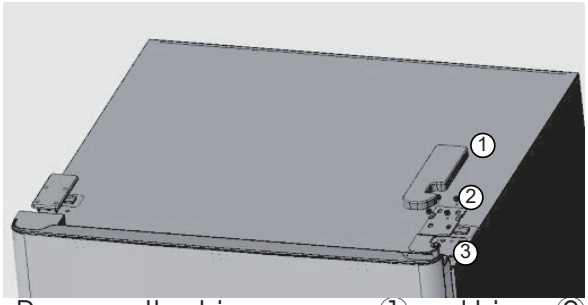

1. Remove the hinge cover ①and hinge② on the top right. Remove the terminal of the wiring ③from right side of the door.

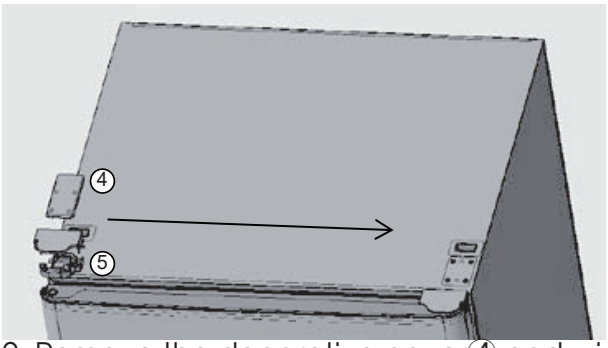

2. Remove the decorative cover④ and wire cover⑤ at the top left corner of the unit and assemble it at the right side.

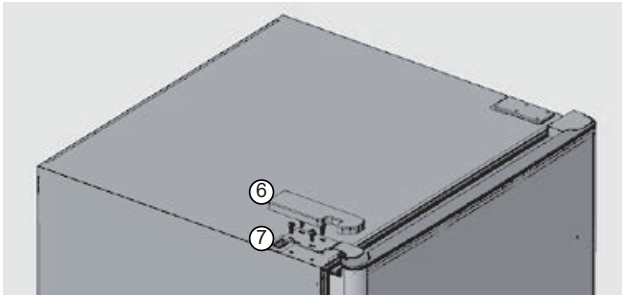

3. Get out Upper left hinge cover ⑥and Upper left hinge⑦ from the accessory bag and fix them on the left of unit. Install the terminal of the wiring and cover the wire cover.

STEP2： Replace bottom door hinge

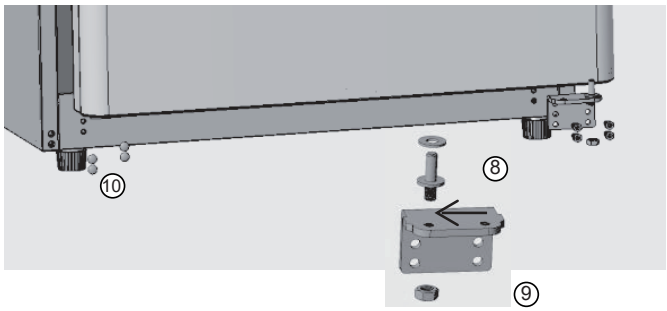

1. Remove bolts ⑧ and bottom hinge ⑨. Unscrew the door shaft nut, move the door shaft to the left hinge and tighten, and remove 4 screw covers ⑩ of the other end.

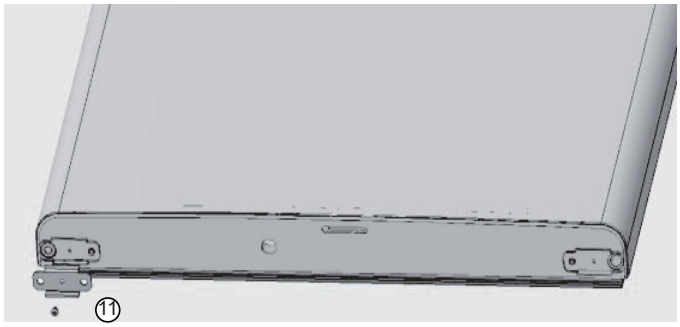

2. Remove the door limit block ⑪ on the right of the door and then assemble it to the left end of the door and fix it.

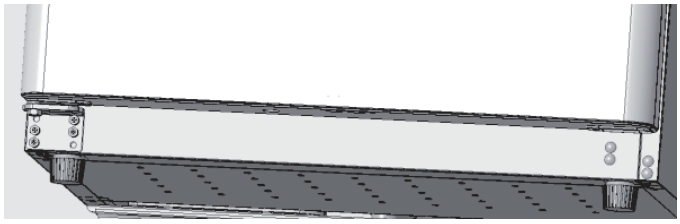

3. Fastened the bottom hinge with four screws and tightened them. Cover the four screws with screw covers.

DOOR REVERSAL INSTRUCTIONS

● For 20.2 CU.FT Upright Freezer MODEL:CUF20P1W(453-6078), follow these steps:

STEP1： Replace top door hinge

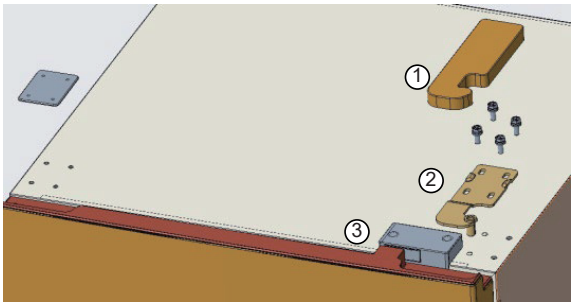

1. Remove the top right hinge cover ① , unscrew the 4 bolts and the upper right hinge ②, and also remove the cover ③ at the top left side of the unit.

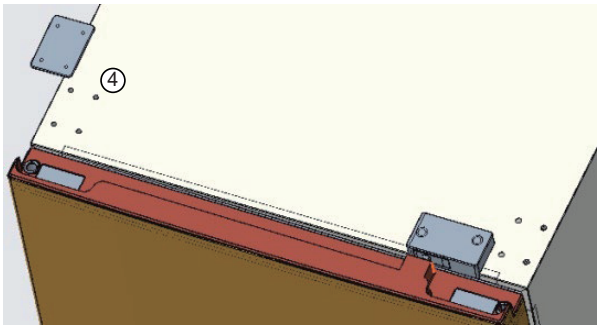

2. Cover the holes on the top right side of the unit with the protective cover ④ removed from the left side.

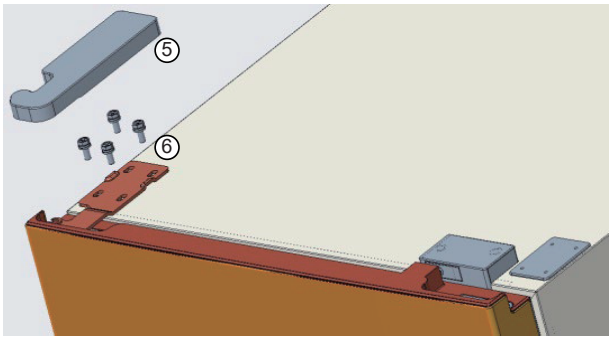

3. Remove the upper left hinge cover ⑤ and upper left hinge ⑥ from the accessory bag, affix the hinge to the top left side of the unit and then attach the hinge cover.

STEP2： Replace bottom door hinge

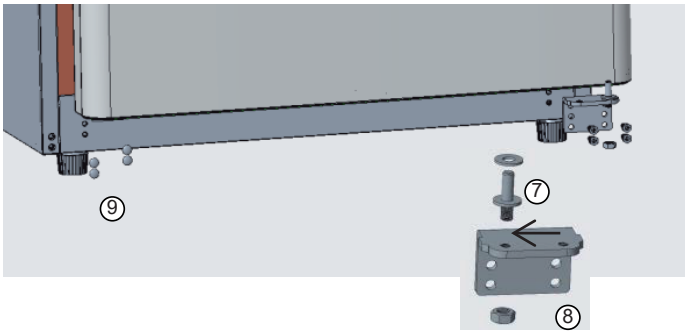

1. Remove bolts ⑦ and bottom hinge ⑧. Unscrew the door shaft nut, move the door shaft to the hinge left and tighten, and remove 4 screw covers ⑨ of the other end.

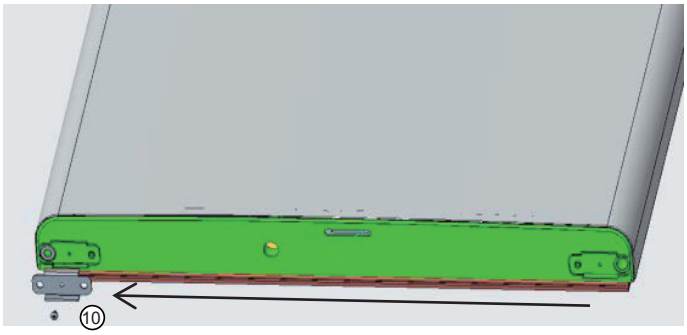

2. Remove the door limit block ⑩ on the right of the door and then install it to the left end of the door and fix it.

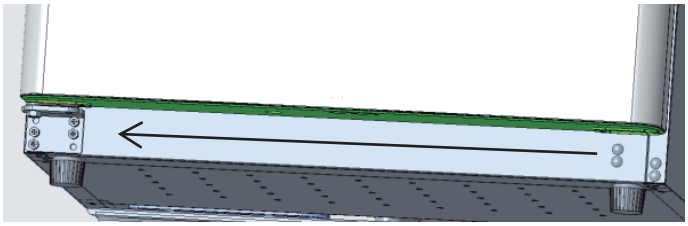

3. Fastened the bottom hinge with four screws and tightened them. Cover the four screws with screw covers.

Finally, check whether the two sides of the door are in line with the cabinet. If necessary, adjust the adjusting foot in the front of the unit so that the product is completely horizontal. After replacing the door, place the unit vertically and let it stand for four hours before power on.

Display Controls

CONTROL PANEL

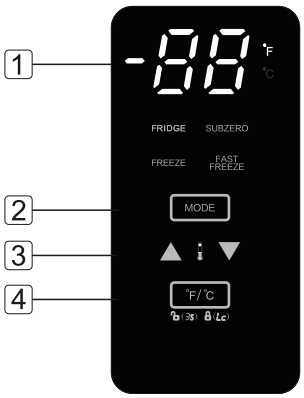

1. Temperature display.
2. Press "MODE" to select optional temperature mode.
3. Press Up and Down arrow to set temperature.
4. The control panel default mode is unlocked.
   Press and hold "° F/° C" button for 3 seconds to activate the control panel.
   Press "° F/° C" button to change the temperature display between ° F and ° C.

TEMPERATURE SETTING
This appliance can be used as either a refrigerator or a freezer.The table below shows the MODE and temperature ranges. Select the MODE. Then set the desired temperature by pressing the Up and Down arrows on the Control Panel. The temperature increases or decreases in one degree increments. The display window will show the selection.

TEMPERATURE MODES & RANGES:
FRIDGE: 0° C ~ 8° C (32° F ~ 46° F)
SUBZERO: -4° C ~ -8° C (25° F ~ 18° F)
FREEZE: -14° C ~ -24° C (7° F ~ -11° F)
FASTFREEZE: -28° C (-18° F)

OPERATING TEMPERATURE RANGE BY MODE
Garage Ready
This appliance is "Garage Ready" for FREEZE or FASTFREEZE modes only. It operates in ambient temperatures from 0° F to 110° F (-17.8° C to 43.3° C).
Note: For FRIDGE or SUBZERO modes, the recommended ambient temperature range is 50° F to 110° F (10° C to 43.3° C).

OPEN DOOR ALARM
This appliance is equipped with a door alarm that will sound if the door is left open for more than 3 minutes.The alarm will beep and the display will flash continuously until the door is closed.

ERROR CODES
E1: The freezer sensor failure
E2: Freezer defrosting sensor failure
E3: The freezer sensor failure and freezer defrosting sensor failure
CO: Communication failure
dr: Door opening alarm
H1: The freezer heater failure

Cleaning and Care

For hygienic reasons the appliance (including exterior and interior accessories) should be cleaned at least every two months.

⚠ CAUTION

The appliance must not be connected to a power source during exterior or interior cleaning. Danger of electrical shock! Before cleaning, switch the appliance off and remove the plug from the wall outlet socket.

Exterior Cleaning

To maintain good appearance of your appliance, you should clean it regularly.

Spray water onto a cleaning cloth instead of spraying directly on the surface of the appliance. This helps ensure an even distribution of moisture to the surface.

Clean the doors, handles and cabinet surfaces with a mild detergent and then wipe dry with a soft cloth.

⚠ CAUTION

Don't use sharp objects to clean as they are likely to scratch the surface.

Don't use thinner, car detergent, bleach, ethereal oil, abrasive cleansers or organic Solvent such as Benzene for cleaning. They may damage the surface of the appliance and may cause fire.You should use mild detergent for the cleaning.

Interior Cleaning

You should clean the appliance interior regularly. It will be easier to clean when food stocks are low. Wipe the inside of the fridge and freezer with a weak solution of baking soda and water, and then rinse with warm water using a wrung-out sponge or cloth. Wipe completely dry before replacing the shelves and baskets. Thoroughly dry all surfaces and removable parts before putting them back into place. Although this appliance automatically defrosts.

a layer of frost may occur on the freezer compartments interior walls if the freezer door is opened frequently or kept open too long. If the frost is too thick, choose a time when the freezer is nearly empty and proceed as follows:

1. Remove existing food and accessory baskets, unplug the appliance from the main power and leave the doors open. Ventilate the room thoroughly to accelerate the process.
2. When defrosting is completed, clean your freezer as described above.

⚠ WARNING

Do not use sharp objects to remove frost from the freezer compartment. Only after the interior is completely dry should the appliance be switched back on and plugged back into the main socket.

Door Gasket Cleaning

Take care to keep the door gasket clean. Sticky food and drinks can cause the gasket to stick to the cabinet and tear when you open the door. Wash gasket with a mild detergent and warm water. Rinse and dry the gasket thoroughly after cleaning.

⚠ CAUTION

Only after the door seals are completely dry should the appliance be powered on.

Replacing the LED Light

Warning: The LED light must be replaced by a competent person. If the LED light is damaged, follow the steps below:

1.Ensure that the appliance is unplugged before replacing the light bulb.
2.Remove the screws from the lamp cover.
3.Take down the LED light.
4.Reinstall the screws after replacing the LED light.

Helpful Hints and Tips

Energy Saving Tips

We recommend that you follow the tips below to save energy.

Try to avoid keeping the door open for long periods in order to conserve energy. Ensure the appliance is away from any sources of heat (direct sunlight, electric oven or cooker etc.)

Don't set the temperature colder than necessary.

Don't store warm food or evaporating liquid in the appliance.

Place the appliance in a well ventilated, humidity free room. Please refer to the Installing your New Appliance chapter.

Tips for Fresh Food Refrigeration

Do not place hot food directly into the refrigerator or freezer, the internal temperature will increase resulting in the compressor having to work harder, and consume more energy.

Do cover or wrap the food, particularly if it has a strong flavor.

Place food properly so that air can circulate freely around it.

Tips for Refrigeration

For Meat: (all types) wrap in cling wrap and place on the glass shelf above the vegetable drawer. Always follow food storage times and use by dates suggested by manufacturers.

Cooked food, cold dishes, etc.:
These should be covered and placed on any shelf.

Fruit and vegetables:
These should be stored in the special drawer provided.

Butter and cheese:
Should be wrapped in airtight foil or plastic film wrap.

Milk bottles:
Should have a lid and be stored in the door Door Racks

Tips for Freezing

When first starting-up or after a period of no use, let the appliance run at least 2 hours on the higher settings before putting food in the compartment.
Prepare food in small portions to enable it to be rapidly and completely frozen and to make it possible to subsequently thaw only the quantity required.
Wrap up the food in aluminum foil or cling wraps which are airtight.
Do not allow fresh, unfrozen food to touch the food which is already frozen to avoid temperature rise of the latter.

Iced products, (ice cubes, popsicles):
If consumed immediately after removal from the freezer compartment, will probably cause frost burns to the skin.

It is recommended to label and date each frozen package in order to keep track of the storage time.

Hints for the Storage of Frozen Food

Ensure that frozen food has been stored correctly by the food retailer.
Once defrosted, food will deteriorate rapidly and should not be re-frozen. Do not exceed the storage period indicated by the food manufacturer.

Switching off your Appliance

If the appliance needs to be switched off for an extended period, the following steps should be taken to prevent mold on the appliance.

1. Remove all food.
2. Remove the power plug from the main socket. socket.
3. Clean and dry the interior thoroughly.
4. Ensure that all the doors are wedged open slightly to allow air to circulate.

Troubleshooting

If you experience a problem with your appliance or are concerned that the appliance is not functioning correctly, you can carry out some easy checks before calling for service, please see below.

WARNING

1. Don't try to repair the appliance yourself. If the problem persists after you have made the checks mentioned below, contact a qualified electrician, authorized service engineer or the shop where you purchased the product.

2. A child entrapment warning statement is included in either the operating instructions or in a use and care manual provided with each refrigerator.

Problem	Possible Cause & Solution
Appliance is not working correctly	Check whether the power cord is plugged into the power outlet properly.
	Check the fuse or circuit of your power supply, replace if necessary.
	The ambient temperature is too low. Try setting the chamber temperature to a colder level to solve this problem.
	It is normal that the freezer does not operate during the defrost cycle, or for a short time after the appliance is switched on to protect the compressor.
Odors from the compartments	The interior may need to be cleaned
	Some food, containers or wrapping cause odors.
Noise from the appliance	The sounds below are quite normal: Compressor making noises. Air movement noise from the small fan motor in the freezer compartment or other compartments. Popping noise during automatic defrosting. Clicking noise before the compressor starts.
	Other unusual noises are due to the reasons below and may need you to check and take action: The cabinet is not level. The back of appliance is touching the wall. Bottles or containers have fallen or are rolling.

The motor runs continuously	It is normal to frequently hear the sound of the motor, it will need to run more under the following circumstances: Temperature setting is set colder than necessary. Large quantity of warm food has recently been stored within the appliance. The temperature outside the appliance is high. Doors are kept open too long or too often. After installing the appliance or it has been switched off for a long time.
A layer of frost occurs in the compartment	Check that the air outlets are not blocked by food and ensure food is placed within the appliance to allow sufficient ventilation. Ensure that the door is fully closed. To remove the frost, please refer to the Cleaning and Care chapter.
Temperature inside is too warm	You may have left the doors open too long or too frequently; or the doors are kept open by some obstacle; or the appliance is located with insufficient clearance at the sides, back and top.
Temperature inside is too cold	Increase the temperature by following the Display Controls chapter.
Doors can't be closed easily	Check whether the top of the refrigerator is tilted back by 10-15mm to allow the doors to self-close, or if something inside is preventing the doors from closing.
The light is not working	The LED light may be damaged. Refer to replace LED lights in Cleaning and Care chapter. The control system has disabled the lights due to the door being kept open too long. Close and reopen the door to reactivate the lights.
Hear water bubbling in the refrigerator	This is normal. The bubbling comes from the refrigerant coolant liquid circulating through the refrigerator.

Disposal of the Appliance

DANGER

It is prohibited to dispose of this appliance as household waste.

Packaging Materials

Packaging materials with the recycle symbol are recyclable. Dispose of the packaging into a suitable waste collection container to recycle it.

Before Disposal of the Appliance

1. Pull out the main plug from the main socket.
2. Cut off the power cord and discard with the main plug.

WARNING

Potential Suffocation Hazard! Potential death or brain damage could occur. Remove doors to prevent potential suffocation.

1. To prevent potential suffocation hazard, remove your old refrigerators doors completely, immediately. Leave shelves installed to help block children from climbing on or getting inside.
2. When disposing of the appliance do so only at an authorized waste disposal center. Do not expose to flame.

Refrigerators contain refrigerant and gases in the insulation. Refrigerant and gases must be disposed of professionally as they may cause eye injuries or ignition. Ensure that tubing of the refrigerant circuit is not damaged prior to proper disposal.

	Correct Disposal of this product
	This symbol on the product or in its packing indicates that this product may not be treated as household waste. Instead, it should be taken to the appropriate waste collection point for the recycling of electrical and electronic equipment. By ensuring this product is disposed of correctly, you will help prevent potential negative consequences for the environment and human health, which could otherwise be caused by the inappropriate waste handling of this product. For more detailed information about the recycling of this product, please contact your local council, your household waste disposal service, or the shop where you purchased the product.

One Year Limited Warranty

Manufacturer provides a limited warranty for each new upright freezer to be free from defects in material and workmanship for a period of 1 year from the date of purchase. Manufacturer agrees to remedy any such defective inside accessory components such as door panels, door shelves, racks, handles, casters, bins and drawers or to furnish a new unit if the unit proves to have failed, at the company's option, for one year from your original date of purchase.

Buyer must register unit at: plasticdevelopmentgroup.com/applianceregistration.

In the event the unit requires replacement or refund under the terms of this limited warranty, the Buyer is responsible for all transportation expenses to return the unit prior to receiving a replacement unit or refund. A copy of the dated sales receipt/invoice is required to receive benefits of this limited warranty.

This limited warranty covers appliances in use within the continental United States, Alaska, and Hawaii, and Puerto Rico.

This limited warranty does not cover the following:

1. Products with original serial numbers that have been removed, altered or cannot be readily determined.
2. Products that have been transferred from its original owner to another party or removed outside the USA.
3. Rust on the interior or exterior of the unit.
4. Damages due to shipping damage or improper installation.
5. Damages due to misuse or abuse.
6. Service calls, repairs, and labor expenses for any purpose.
7. Content losses and food spoilage due to failure of the unit.
8. Punctures to the evaporation system due to improper defrosting of the unit.
9. Replacement or resetting of house fuses or circuit breakers.
10. Failure or defects of this product if used for other purposes than its intended purpose or used other than in accordance with the provided instructions.
11. Disposal costs for failed unit not returned to Manufacturer.
12. Any delivery/installation costs incurred as the result of a unit that fails to perform as specified.
13. Expenses for travel and transportation for product if you are exchanging or returning the unit.
14. Expenses related to the removal and re-installation of your unit or for making the unit accessible, such as removal of trim, cupboards, shelves, etc. or if not installed in accordance with the provided installation instructions.
15. Damages to the finish of the unit or home incurred during installation, including but not limited to floors, cabinets, walls, etc.
16. Damages caused by external causes such as abuse, misuse, inadequate power supply, accidents, fires, or acts of God.
17. Refunds for returned products are limited to the price paid for the unit per the sales receipt.

Disclaimer of Implied Warranties, Limitation of Remedies and Exclusions:

EXCEPT FOR THE EXPRESS WARRANTIES SET FORTH HEREIN, MANUFACTURER MAKES NO WARRANTY WHATSOEVER (OR THE SHORTEST PERIOD ALLOWED BY LAW) REGARDING THE GOODS, INCLUDING ANY (1) WARRANTY OF MERCHANTABILITY; (2) WARRANTY OF FITNESS FOR A PARTICULAR PURPOSE; (3) WARRANTY OF TITLE; OR (4) WARRANTY AGAINST INFRINGEMENT OF INTELLECTUAL PROPERTY RIGHTS OF A THIRD PARTY; WHETHER ARISING BY LAW, COURSE OF DEALING, COURSE OF PERFORMANCE, USAGE OF TRADE, OR OTHERWISE. BUYER ACKNOWLEDGES THAT IT HAS NOT RELIED ON ANY REPRESENTATION OR WARRANTY MADE BY MANUFACTURER, OR ANY OTHER PERSON ON MANUFACTURER'S BEHALF. REPLACEMENT OF UNIT AND LISTED PARTS IN ACCORDANCE WITH THE TERMS HEREIN, IS YOUR SOLE AND EXCLUSIVE REMEDY UNDER THIS LIMITED WARRANTY. MANUFACTURER IS NOT LIABLE FOR INCIDENTAL OR CONSEQUENTIAL DAMAGES AND NO REPRESENTATIVE OR PERSON IS AUTHORIZED TO ASSUME FOR MANUFACTURER ANY OTHER LIABILITY IN CONNECTION WITH THE SALE OF THIS PRODUCT. UNDER NO CIRCUMSTANCE IS THE CONSUMER PERMITTED TO RETURN THE UNIT TO MANUFACTURER WITHOUT THE PRIOR WRITTEN CONSENT OF MANUFACTURER.

Customer Service,(toll free: 1-833-953-1758) between the hours of 8:00 am and 4:00 pm EST
EMAIL: Criterion@customer-appliance.com
Product Registration: plasticdevelopmentgroup.com/applianceregistration

State of California Proposition 65 Warnings:
WARNING: This product contains one or more chemicals known to the State of California to cause cancer.
WARNING: This product contains one or more chemicals known to the State of California to cause birth defects or other reproductive harm.

Customer Service, (toll free:1-833-953-1758) between the hours of 8:00 am and 4:00 pm EST
EMAIL: Criterion@customer-appliance.com
Product Registration: plasticdevelopmentgroup.com/applianceregistration