TME-N ActiveCore

SKOPE Top Mount Chiller
Hydrocarbon



Service Manual

MAN80128 Rev. 1.3 Jun. 2020

SKOPE® Refrigeration

TME-N ActiveCore
SKOPE Top Mount Chiller
Hydrocarbon
Service Manual

MAN80128
Rev. 1.3 Jun. 2020

© 2018 SKOPE Industries Limited. All rights reserved.

SKOPE Industries Limited reserve the right to alter specifications without notice.

SKOPE® is a registered trademark of SKOPE Industries Limited.

SKOPE INDUSTRIES LIMITED
Head Office
PO Box 1091, Christchurch
New Zealand
Freephone: 0800 947 5673
E-mail: skope@skope.com
Website: www.skope.com

Trademark Infringement

The SKOPE trademark on this product is infringed if the owner, for the time being, does any of the following:

- Applies the trade mark to the product after their state, condition, get-up or packaging has been altered in any manner
- Alters, removes (including part removal) or obliterates (including part obliteration) the trade mark on the product
- Applies any other trade mark to the product
- Adds to the product any written material that is likely to damage the reputation of the trade mark

Notice of the above contractual obligations passes to:

- Successors or assignees of the buyer
- Future owners of the product

CONTENTS

1 Servicing Hydrocarbon
- Overview . . . 5
- SKOPE HC Service Requirements . . . 6

2 Specifications
- Models . . . 7

3 Electronic Controller
- Overview . . . 8
- Apps . . . 8
  - SCS Connect Field App . . . 8
  - SCS Connect Track App . . . 8
  - SKOPE Connect App . . . 8
- Controller Faceplate . . . 9
  - Buttons and Display . . . 9
  - Service Mode . . . 9
- SCS Connect Field App and Track App . . . 11
  - Connecting . . . 11
  - App Categories . . . 12
- Faults and Alarms . . . 13

4 Wiring
- Model: TME650/1000N-A Series . . . 16
- Notes . . . 17

5 Spare Parts
- Main Assembly - TME650N-A Series . . . 18
- Main Assembly - TME1000N-A Series . . . 19
- Cabinet Assembly - TME650N-A Series . . . 20
- Cabinet Assembly - TME1000N-A Series . . . 21
- Glass Door Assembly . . . 22
- Lit Sign Assembly . . . 23
- Unit Assembly UTHCNI-0010 . . . 24

6 Installation
- Installation Guidelines . . . 26
- Ventilation Requirements . . . 26
- Door Handles . . . 27
  - Fitting Door Handles . . . 27
  - Removing Door Handles . . . 28
- Shelves . . . 29
  - Shelf Clips . . . 29
  - Repositioning Shelves . . . 29

7 Replacement Procedures
- Lighting . . . 30
  - Sign Light . . . 33
- Doors . . . 34
  - Alignment Adjustment . . . 34
  - Height Adjustment . . . 34
  - Replacing the Gasket . . . 34
  - Removing and Refitting the Door . . . 34
  - Adjusting Door Tension . . . 36
  - Replacing the Torsion Bar . . . 36
  - Hinge Reversal . . . 37
- Refrigeration Unit . . . 38
  - Before Servicing . . . 38
  - Refrigeration Unit Assembly . . . 39
  - Gas Detector . . . 40

Leak Detector 40
On-Site Work 40
HydrocarbonWorkshop 40
Removing the Unit 41
Replacing the Unit 42
Unit Electrics Box Assembly 43
Unit Cover 44
Condenser Fan 44
Evaporator Fan 46
Compressor 47
Compressor Electrics 47
Refrigeration System 48
Unit Removal 48
Diagnostics 48
Electronic Controller 49
Controller Location 49
QC Terminals 49
Replacing the Controller 50
Door Switch 51
Control Probe 51
Evaporator Probe 52
Condenser Probe 53
Ambient Probe 54
Cleaning 55
Cabinet 55
Condenser Coil 55
8 Troubleshooting
Electronic Controller 56
Cabinet and Refrigeration Unit 56
Diagnostic Table 56
On-site work procedure 58

1 Servicing Hydrocarbon

Overview

This cooler utilises hydrocarbon (HC) R290 Propane as its refrigerant. Hydrocarbon is a natural refrigerant that has a very low environmental impact.

Special service requirements are needed as hydrocarbon is a flammable refrigerant.

Safety hazards

The main hydrocarbon safety hazards are:

- Flammable refrigerant.
- Venting of hydrocarbon and compressor oil.
- Asphyxiation.

SKOPE does NOT recommend performing hazardous activities on the refrigeration system. See “Refrigeration System” on page 48 for more information including examples of hazardous activities.

SKOPE HC Service Requirements

Servicing must only be performed by Approved SKOPE Service Technicians, and must meet all requirements in the SKOPE HC Service Policy (available from SKOPE), including the following:

Hydrocarbon work – SKOPE Service Policy

It is the responsibility of the service technician to follow SKOPE's Hydrocarbon equipment service policy and by accepting a service work order they agree to the following (where applicable):

- MUST – Ensure all workers are trained in the SAFETY of hydrocarbon products to the appropriate level for the work required.
- MUST – Follow all Local Safety Regulations relevant to flammable refrigerant gases.
  - Australia should reference - AIRAH Flammable Refrigerants – Safety Guide
  - New Zealand should reference – Flammable Refrigerant Safety Documentation (Refrigerant License NZ)
- MUST – Adhere to all on-site (workplace) Health and Safety requirements
- MUST – Not modify or alter the design of SKOPE equipment in any way
- MUST – In cases where the refrigeration system is not readily removable from the cabinet; then the entire cabinet MUST be sent to the Hydrocarbon workshop for repair.
- MUST – ONLY use SKOPE OEM Spare Parts; or identical replacement parts. Any variation in replacement part may render the system non-compliant and unsafe.
- MUST – Follow all best practice work activities for servicing hydrocarbon refrigerants (SKOPE recommend attending specific hydrocarbon refrigeration handling training courses). Nitrogen must be used for purging system before commencing "Hot Work" – brazing.
- MUST – Adhere to relevant SKOPE Service Manual. If any contradiction, the local Regulations take precedence over SKOPE requirements
- MUST – Work only in suitable, safe and compliant work spaces. Personal Protective Equipment must always be used when working on Hydrocarbon equipment.
- MUST – Service people diagnosing refrigeration faults must always carry and utilise Flammable Gas detectors when working on Hydrocarbon equipment.
- MUST – Prior to any service work; know where and how to safely and quickly isolate power supply to cabinet
- MUST – Not perform any Hot Work (brazing etc.) in the field. These are to be completed in a suitable service depot / workshop (in a dedicated specific Hazardous Work Area compliant to local flammable gas regulations)
- MUST – Not transport a refrigeration system with a known active leak. If there is an active leak the refrigerant must be safely removed (with use of Bullet Piercing Valve or Line Tap valves) before transporting. Valves must be removed at the hydrocarbon service depot once repair is completed.
- MUST – All hydrocarbon workshop areas must have emergency plans; that includes suitable evacuation and fire control plans and equipment.
- MUST – Only use refrigerant grade hydrocarbon, to precise mass specified on removable refrigeration system serial label.
- MUST – Be accurate refrigerant charge; The refrigerant mass is ultra-low charge and must only be measured in by accurate scales to +/- 1.0gram. Refrigerant MUST not be overcharged; or added to an already charged system.
- MUST – Use identical drier replacement; as any change will affect gas charge volume; and effect reliability compliance and safety.
- MUST – Any pipework replacement, must be identical to genuine SKOPE parts.
- MUST – Not introduce a sparking device inside a cabinet or inside a removable refrigeration system. Battery drills should not be used.
- MUST – Not perform any activity that could stress a refrigeration pipe (unless in a workshop).
- MUST – Get customer authorisation to permanently swap a removable refrigeration system.
- MUST – Have the Wellington Drive SCS Field app installed on a Bluetooth enabled device carried by the service technician (exception is for cabinets that do not utilise the Wellington Drive Controller).

  The app should be utilised for safe, accurate diagnosis of the system and it is required to complete a controller replacement in the field.
- RECOMMENDED – Have the Wellington Drive SCS Track app installed on a Bluetooth enabled device carried by the service technician. This passive app collects system data from the Wellington Drive SCS Connect Controller and transmit it to the cloud.
- Logistics companies may be used to transport a complete refrigerator where no separation of the refrigeration system occurs. Logistics companies are not required to be contracted to this SKOPE Service Policy.

2 Specifications

Models

This service manual is applicable to the SKOPE TME ActiveCore top mount chillers detailed in the table below. Refer to the relevant product specification sheet (available on the SKOPE website: www.skope.com) for specifications.

Series	Model	SKOPE ID
TME650N-A ActiveCore	TME650N-A	SM65GYN
	TME650N-AC	SM65BYN
TME1000N-A ActiveCore	TME1000N-A	SM10GYN
	TME1000N-AC	SM10BYN

3 Electronic Controller

Overview

The cooler is fitted with a Wellington Drive SCS Connect electronic controller. The controller is located above the door/s and visible from the outside of the chiller.

Controller servicing can be performed via the controller faceplate, or the SCS Connect Field app.

Apps

SCS Connect Field App

The SCS Connect Field app is designed for service techs, and provides access to the controller from mobile devices with Bluetooth capability. The app provides information on data logging, alarm notification and diagnostic control.

See “SCS Connect Field App and Track App” on page 11 for information on setting up and using the app.

SCS Connect Track App

The SCS Connect Track app is used to upload data from chillers fitted with a Wellington SCS Connect electronic controller.

SKOPE Connect App

The SKOPE-connect app is designed for end-users and provides wireless access to the controller from mobile devices with Bluetooth capability.

The app allows end users to adjust some electronic controller settings including energy saving modes, open/close hours and preset temperature set points for specific product.

The app may be useful for diagnostics. Download from the Google Play Store, or Apple App Store.

Controller Faceplate

Buttons and Display

The controller faceplate includes the front display panel and interface buttons.

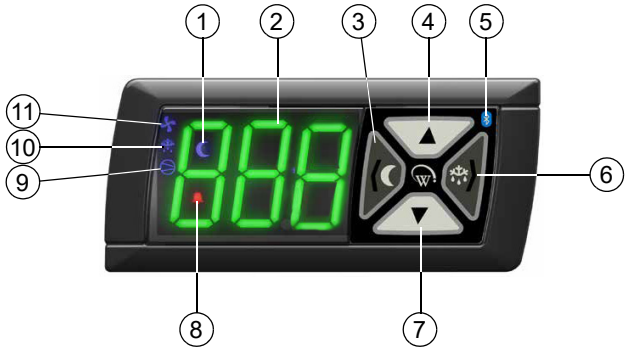

No.	Description
1	**Night Mode:** Indicator. On during cooler night mode.
2	**Display:** Indicator. Digital display of cabinet air temperature or messages. The temperature is what the sensor inside the cooler detects, and not necessarily the product temperature. However, they may be very close depending on how the controller is set to sense temperature.
3	**Light Switch - Night Mode (back/abort):** Button. Press to switch the lights on or off. Press and hold to switch cooler between day and night mode. Used during programming.
4	**Up:** Button. Used for programming.
5	**Bluetooth:** Indicator. On when ready to connect to a device. Flashing when connected to a device.
6	**Defrost Cycle (next/enter):** Button. Press and hold to initiate manual defrost. Used during programming.
7	**Down:** Button. Used for programming.
8	**Fault - Alarm:** Indicator. On during fault or alarm. Note: Alarm message is also shown on the display during alarm.
9	**Compressor:** Indicator. On when the compressor is running.
10	**Defrost Mode:** Indicator. On during defrost cycle.
11	**Fan:** Indicator. ON when evaporator fan running.

Service Mode

Service mode can be accessed and used via the SCS Connect Field app (see “SCS Connect Field App and Track App” on page 11), or the controller faceplate (see below).

Note: A 9 digit pin code is required to access service mode via the controller buttons. Contact your User Manager to receive your activation code.

To enable and use service mode via the controller faceplate

1. Press and hold the up and down buttons simultaneously until prompted to enter the 9 digit pin code.
2. Enter service mode pin code.
3. Use the up, down, back/abort and next/enter buttons to navigate to the desired category.

There are 5 main service mode categories when accessing and using service mode via the controller faceplate:

Parameters

Provides access and editing of individual controller parameters.

It is not recommended that parameters are changed unless absolutely necessary. If incorrect parameter settings are suspected, reload the complete parameter set.

Reset

Returns the controller back to factory settings. Parameter set must be reloaded after performing a reset.

Manual test

Allows inspection of input values from sensors, and check the effects of output adjustments to peripherals, and to run preset test routines.

Statistics

Displays logged values and event counts to assist with fine tuning and diagnostics.

About

Lists the properties of the refrigeration system and the controller, including cooler model codes, firmware, hardware and software versions.

SCS Connect Field App and Track App

Connecting

Follow the procedures below to install and set-up the app, and connect to a controller.

Note: The SCS Connect Field app and Track app is separate from the SKOPE-connect app.

To install the SCS Connect Field app

1. Download and install the Connect Field app or Track app from Google Play or Apple Store (search for “scs wellington” to find it).
2. When you first run the app, you will be requested to enter an activation code. Contact your Service Manager or SKOPE to receive your activation code (you must be connected to the internet at the time of activation).

   Your activation code is unique to you, and should NEVER be shared with anyone else, as it determines your personal access level for the app. The same code will give you access to all SCS apps you are authorised to use.
3. Once activation is complete, you must define a 4-digit PIN code. This can be any code unique to you. Each time you start the app, you will be required to enter this same PIN code. This is to prevent other people accessing the app from unlocked phones.
4. You can see which databases you are activated against from the “Settings” screen. You can be activated to more than one database at the same time. Simply select ACTIVATE ANOTHER DATABASE, and enter the new databases unique activation code, as in Step 2.

To connect to a controller

1. Check that the Bluetooth logo on the top right of the controller faceplate is lit, indicating that the controller is ready to connect to a device.

   Note: A flashing Bluetooth logo indicates that the controller is currently connected to a device.
2. Open the SCS Connect Field app.
3. Select a controller to connect to from the list of visible controllers.

   Note: This list is filtered by your activation permissions, so devices you are not authorised to connect to will not be displayed.
4. Select ‘connect’ to connect to the controller.
5. Check that the Bluetooth logo on the top right of the controller faceplate is flashing, indicating that the controller is connected.

App Categories

Various options are available in the app menu to provide information about the connected controller and it's cooler. Depending on user access level, some menu options may not be available.

Home screen

The home screen shows a graphic representation of the current state of the cooler being controlled.

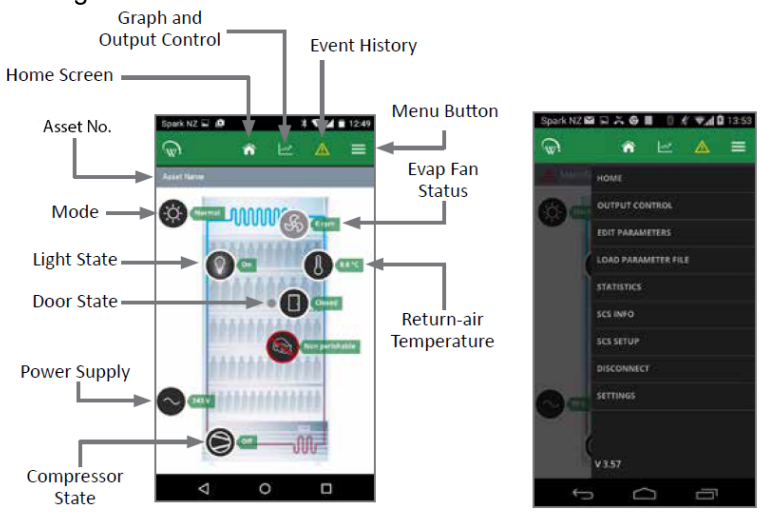

Home Screen (Fridge Status)

Main Menu

Output control

Provides control of the controller input sensors and switches, and output relays.

Edit parameters

Provides access and editing of individual controller parameters.
Note: Parameter changes must be recorded on warranty/job card.

It is not recommended that parameters are changed unless absolutely necessary. If incorrect parameter settings are suspected, reload the complete parameter set. **Note:** Updated parameters are not applied until DISCONNECT has been selected from the menu (after loading new parameter set).

Load parameter file

Allows reloading of cooler default parameter set or changing to new parameter set. See "Replacing the Controller" on page 50 for instructions.
Note: Updated parameters are not applied until DISCONNECT has been selected from the menu (after loading new parameter set).

Statistics

Information from the past seven days on cooler activity including temperatures, door openings and alarms.

SCS info

Controller version and cooler asset information.

SCS setup

Add or change SCS info (see above).

Disconnect

Disconnect from currently connected controller.

Settings

Change app general settings.

Faults and Alarms

The following table explains faults and alarms that the electronic controller may log and display.

If a fault occurs, the fault - alarm indicator is lit on the controller faceplate, but no message is displayed. Faults do not affect product temperature, and require no action from the shop owner.

Alarms are logged and the alarm message is displayed on the controller faceplate. Alarms may result in abnormal product temperature.

Some faults and alarms can be cleared by the shop owner, and others can only be cleared by a service technician.

If the cooler is connected to the power supply and has warm product, check the SCS Connect Field App for active fault or alarm, and investigate. If the cooler does not have an active fault or alarm, check the app statistics to determine if and when the controller signalled a fault or alarm.

Refer to the tables below for faults and alarm descriptions and possible causes and actions. The service tech type column refers to the service tech skill level required to complete a task. Refer to the SKOPE HC Service Policy for service tech type details.

Faults

Description	Service tech type	Possible root cause
Door left open. The door has been open for several minutes.	1, 2, 3, 4	- door not self closing (torsion fault) - door switch / circuit - controller
Excessive door open counts		
Over-voltage protection The maximum allowable mains supply voltage has been exceeded. The cabinet has temporarily shut down to prevent damage and will restart once the supply voltage decreases.	1, 2, 3, 4	- should be a one off; if continues: - line voltage / rural - voltage setting parameter - controller
Under-voltage protection The mains supply voltage has dropped below the minimum allowable level. The cabinet has temporarily shut down to prevent damage and will restart once the supply voltage increases.	1, 2, 3, 4	- should be a one off; if continues: - power supply overloaded / multibox - line voltage / rural. - voltage setting parameter - controller
High condensing temperature protection The system was operating at an elevated temperature and has temporarily shut down to prevent damage. Extended operation in this condition may result in ALARM 15, increased energy consumption and a reduction in cabinet life. This alarm may be caused by very high ambient temperature.	2, 3, 4	NO swap unit required - condenser not clean - poor installation / ventilation - condenser fan motor / blade - controller
Excessive compressor cycling protection The system has been turning on and off too frequently.	2, 3, 4	Take spare unit in case refrigeration system fault. - condenser blocked - poor installation / ventilation - cabinet / unit gasket seals leaking - door not self closing / gasket leaking - product; hot / blocking cabinet airflow - overloaded from excess door openings / ambient - fan motor / blade (condenser / Evap) - controller - compressor / gas leak = SWAP unit

Alarms

Code	Description	Service tech type	Possible root cause
dor	Door left open. The door has been open for several minutes. Will revert to door left open FAULT after 10 minutes (see faults table on previous page).	1, 2, 3, 4	- door not self closing (torsion fault) - door switch / circuit - controller

Code	Description	Service tech type	Possible root cause
8	Estimated product temperature below allowable range The estimated product temperature has been below the allowable range for longer than the permissible time. Potential causes are: an empty or partially filled cabinet, or low ambient temperature.	1, 2, 3, 4	- low ambient - App settings - controller
9	Estimated product temperature above allowable range The estimated product temperature has been above the allowable range for longer than the permissible time. Potential causes are: excessive door openings, door being left open, or warm product loaded into cabinet.	2, 3, 4	NO Swap unit required to be taken (but may be required as fault could still be with sealed refrigeration system) - condenser blocked - poor installation / ventilation - frozen blocked evap coil - unit gasket leaking (to cabinet seal / lid seal) - door leaking air (bad gasket / door not self closing) - product; hot / blocking cabinet airflow - overloaded from excess door openings / ambient - fan motor / blade (condenser / Evap) - App settings - controller - compressor / gas leak = arrange SWAP unit
15	Excessive condensing temperature protection The system was operating at an excessive temperature and has shut down to prevent permanent damage. This alarm may occur due to very high ambient temperature.	2, 3, 4	NO swap unit required - condenser not clean - poor installation / ventilation - condenser fan motor / blade - controller
17	Control probe failure A critical system sensor has failed and the cabinet can no longer operate.	2, 3, 4	NO swap unit required - control Probe / circuit - controller
18	Electrical over-current protection activated The compressor was drawing too much current and has shut down to prevent permanent damage.	2, 3, 4	Take spare unit in case refrigeration system fault. - condenser blocked - poor installation / ventilation - cabinet / unit gasket seals leaking - door not self closing / gasket leaking - product; hot / blocking cabinet airflow - overloaded from excess door openings / ambient - fan motor / blade (condenser / Evap) - controller - compressor / gas leak = SWAP unit
19	Failed to reach set temperature The refrigeration system has been operating continuously for a long period without reaching the set temperature.	2, 3, 4	Take spare unit in case refrigeration system fault. - condenser blocked - poor installation / ventilation - frozen blocked evap coil - cabinet seal leaking / door / unit - product; hot / blocking cabinet airflow - overloaded from excess door openings / ambient - fan motor / blade (condenser / Evap) - controller - compressor / gas leak = SWAP unit
20	Over cooling product The internal temperature is too low. The system has temporarily shut down until the temperature has returned to normal. This can occur if the set temperature has been raised by a large amount.	1, 2, 3, 4	- confirm if really too cold; change parameters accordingly
22	Evaporator fan over-current protection The current supplied to the evaporator fan motor is too high.	2, 3, 4	NO swap unit required - faulty fan motor - fan blade fault (imbalance / debris / blockage) - controller
23	Condenser fan over-current protection The current supplied to the condenser fan motor is too high.	2, 3, 4	NO swap unit required - faulty fan motor - fan blade fault (imbalance / debris / blockage) - controller
24	Controller communication error Controller has lost communication channels.	1, 2, 3, 4	- App - controller / circuit

Continued over page

Code	Description	Service tech type	Possible root cause
25	Controller update failed Controller update could not be completed.	1, 2, 3, 4	- App - controller / circuit
26	Controller hardware failure Controller hardware has failed.	1, 2, 3, 4	- App - controller / circuit
27	Probe failure A non-critical system probe has failed. The cabinet will continue to operate with partial function but requires service.	2, 3, 4	NO swap unit required - Evap probe / connections - controller
28	No downward tendency The temperature is no longer decreasing.	2, 3, 4	Take spare unit in case refrigeration system fault. - condenser blocked - poor installation / ventilation - cabinet / unit gasket seals leaking - door not self closing / gasket leaking - product; hot / blocking cabinet airflow - overloaded from excess door openings / ambient - fan motor / blade (condenser / Evap) - controller - compressor / gas leak = SWAP unit
29	Compressor cutting out The compressor cut out on its internal protection or pressure switch.	2, 3, 4	Take spare unit in case refrigeration system fault. - condenser blocked - poor installation / ventilation - cabinet seal leaking / door / unit - product; hot / blocking cabinet airflow - overloaded from excess door openings / ambient - fan motor / blade (condenser / Evap) - controller - compressor / gas leak = SWAP unit
30	Excessive automatic defrosting The system is automatically defrosting too frequently.	2, 3, 4	Take spare unit in case refrigeration system fault. - door not self closing / gasket leaking - Evaporator probe - Evaporator motor / fan - controller - compressor / gas leak = SWAP unit
31	Compressor stalling The compressor is stalling on start up.	2, 3, 4	Take spare unit in case refrigeration system fault. - condenser blocked - poor installation / ventilation - cabinet / unit gasket seals leaking - door not self closing / gasket leaking - product; hot / blocking cabinet airflow - overloaded from excess door openings / ambient - fan motor / blade (condenser / Evap) - controller - compressor / gas leak = SWAP unit

4 Wiring

Model: TME650/1000N-A Series

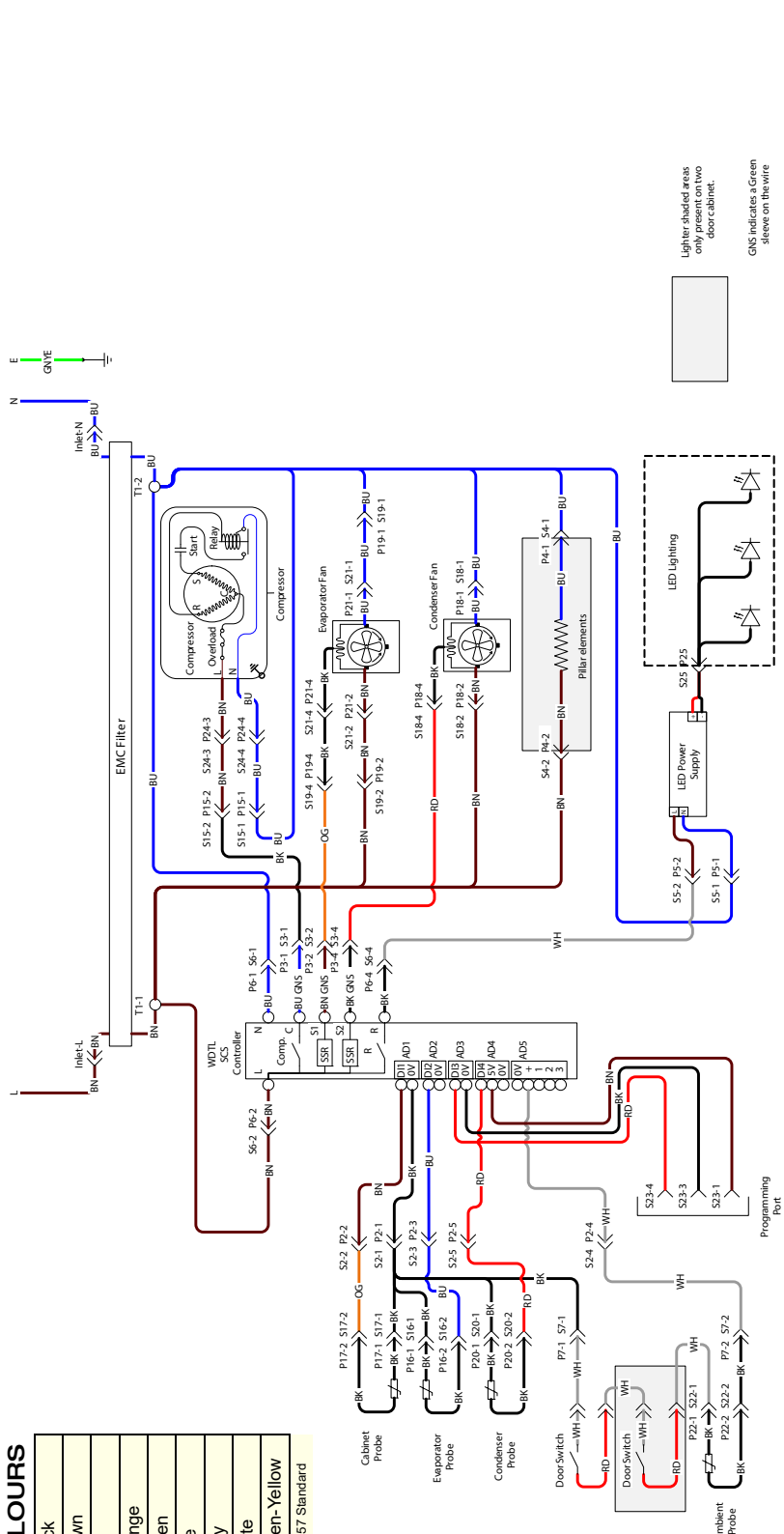

WIRE COLOURS

BK	Black
BN	Brown
RD	Red
OG	Orange
GN	Green
BU	Blue
GY	Grey
WH	White
GNYE	Green-Yellow

Based upon IEC 757 Standard

LEGEND

Internal Unit Junction Box Sockets/Plugs					
Inlet	IEC Cabinet Socket/Plug	S10/P10	Not Used	S20/P20	Condenser Sensor Socket/Plug (Red 2-way)
S1/P1	Not Used	S11/P11	Not Used	T1	Unit Terminals
S2/P2	Unit Junction Box to Controller Signal Socket/Plug (6-way)	S12/P12	Not Used	**External Sockets/Plugs**	
S3/P3	Unit Junction Box to Controller Power Socket/Plug (Blue 4-way)	S13/P13	Not Used	S21/P21	Evaporator Motor Extension Socket/Plug (White 4-way)
S4/P4	Heater Wire Unit Socket/Plug (Black 3-way)	S14/P14	Not Used	S22/P22	Ambient Sensor Socket/Plug (Blue 2-way)
S5/P5	Light Unit Socket/Plug (White 3-way)	S15/P15	Compressor Unit Socket/Plug (Blue 4-way)	S23/P23	Programming/Comms Port Socket (Blue 4-way)
S6/P6	Unit Junction Box to Controller Power Socket/Plug 1 (Red 4-way)	S16/P16	Evaporator Sensor Socket/Plug (Black 2-way)	S24/P24	Compressor Electrics Plug
S7/P7	Door Sensor Socket/Plug (White 2-way)	S17/P17	Cabinet Sensor Socket/Plug (White 2-way)	S25/P25	LED Driver DC Output Socket/Plug (Red 2-way)
S8/P8	Not Used	S18/P18	Condenser Motor Unit Socket/Plug (Red 4-way)	-	
S9/P9	Not Used	S19/P19	Evaporator Motor Unit Socket/Plug (White 4-way)		

Notes

5 Spare Parts

Main Assembly - TME650N-A Series

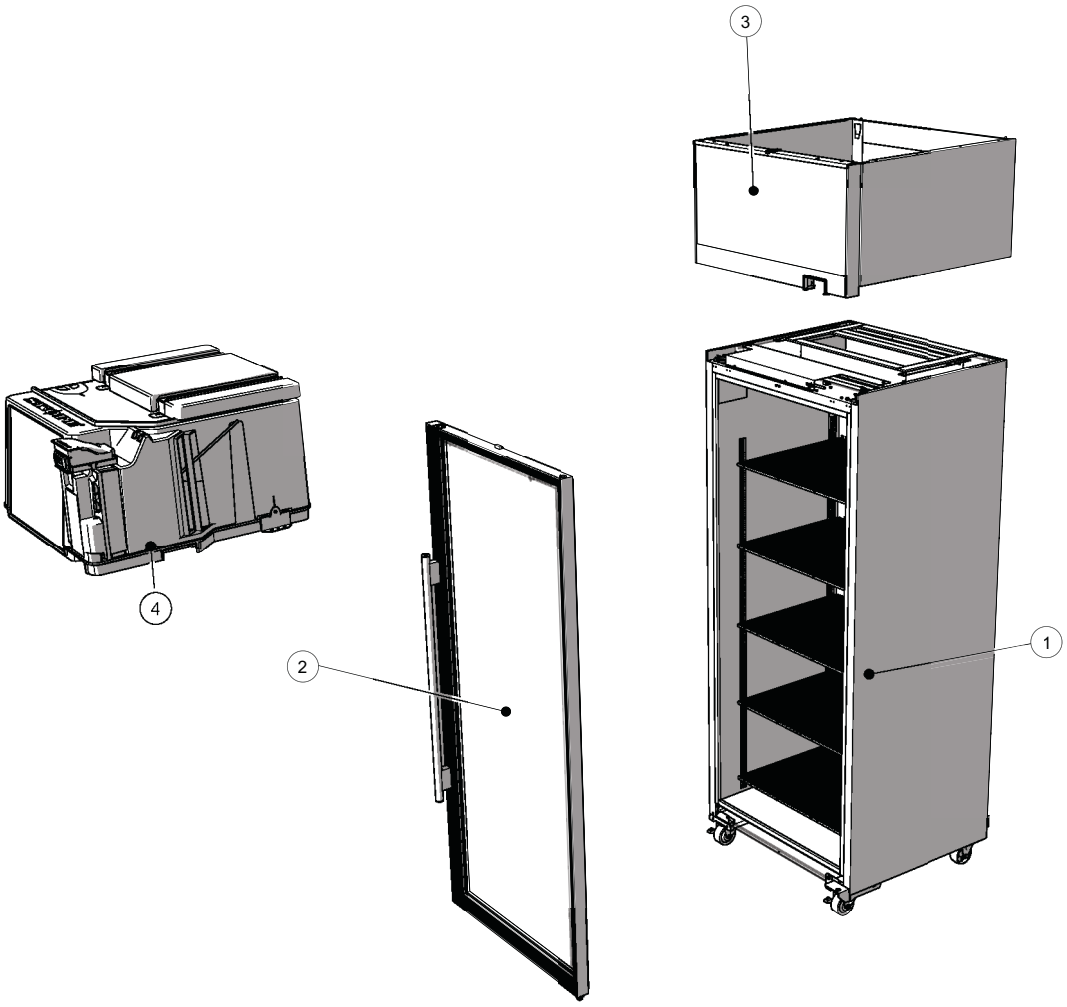

Parts — Main Assembly TME650N Series

No.	Description	Page
1	Cabinet assembly	Page 20
2	Door assembly	Page 22
3	Sign assembly	Page 23
4	Unit assembly	Page 25

Main Assembly - TME1000N-A Series

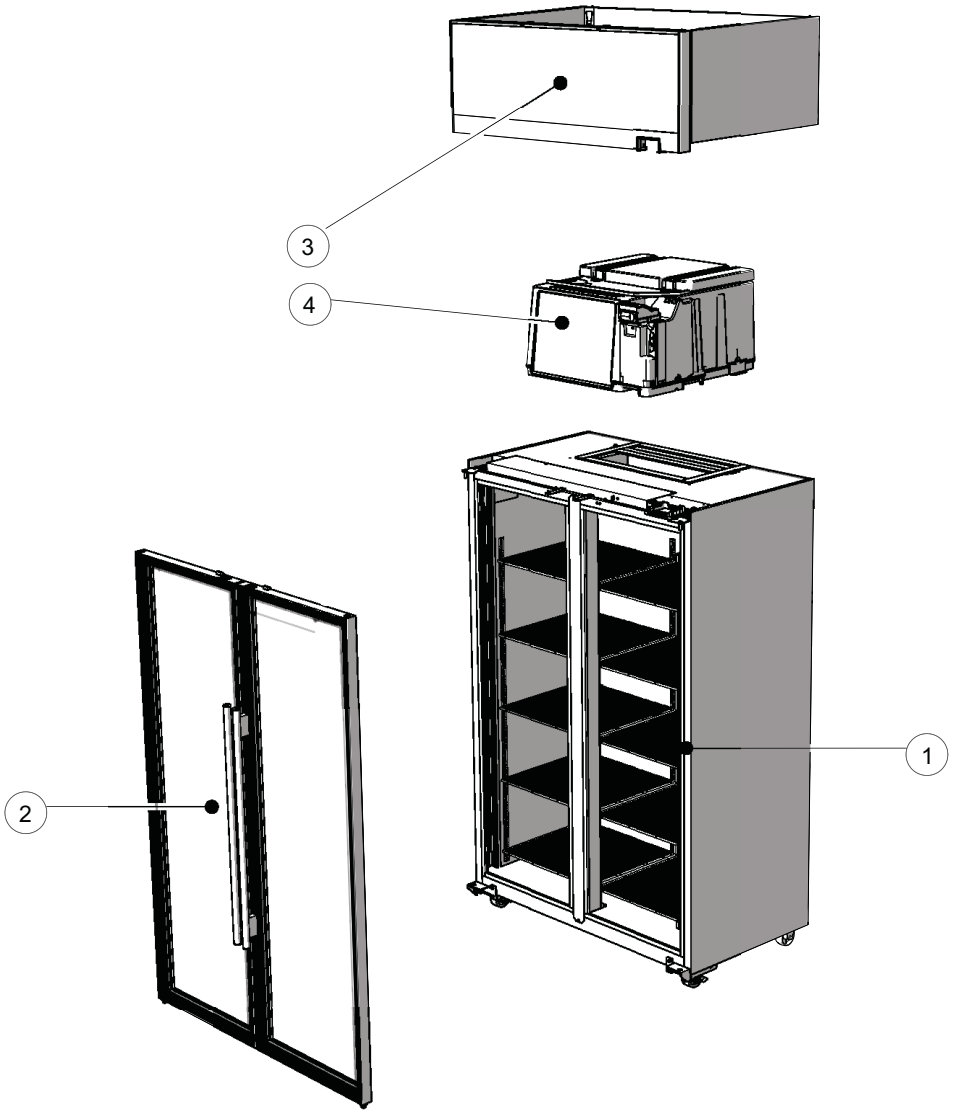

Parts — Main Assembly TME1000N Series

No.	Description	Page
1	Cabinet assembly	Page 21
2	Door assembly	Page 22
3	Sign assembly	Page 23
4	Unit assembly	Page 25

Cabinet Assembly - TME650N-A Series

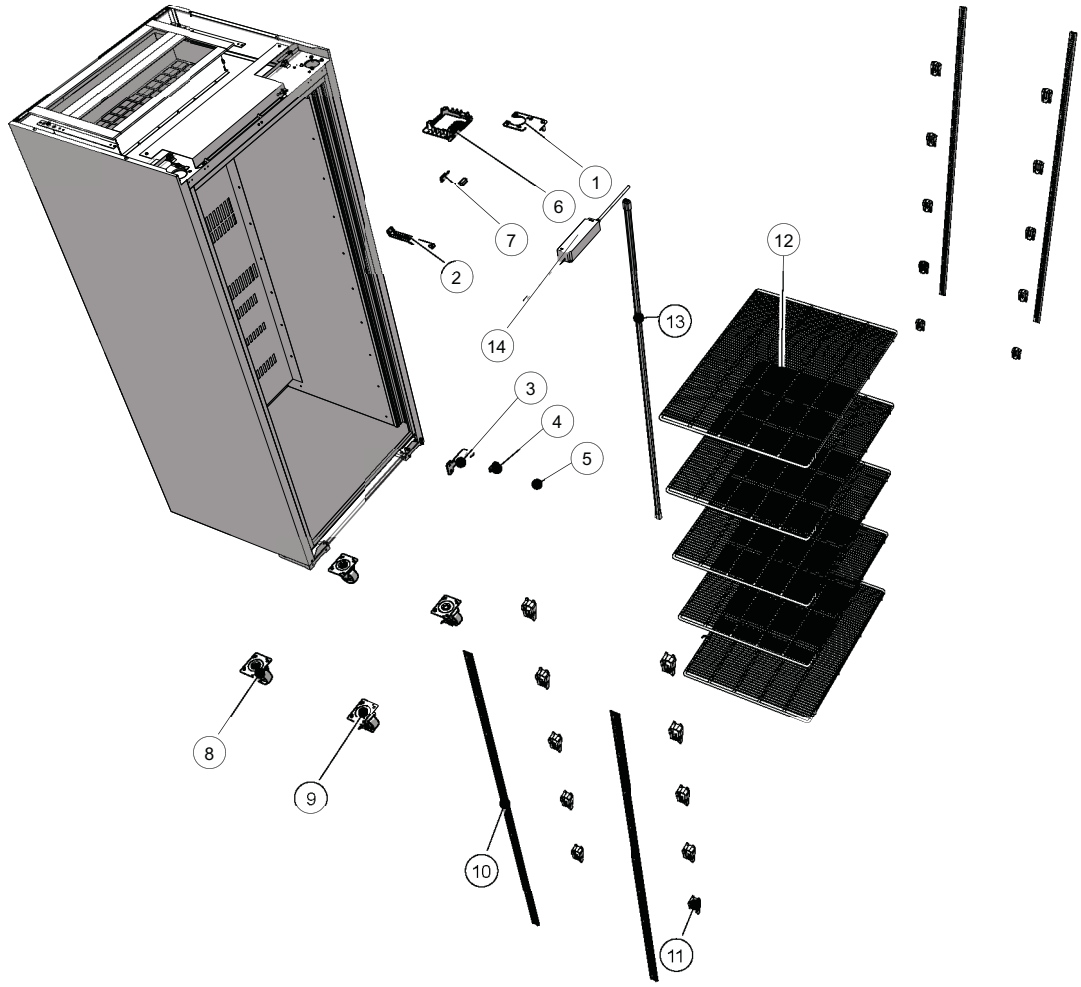

Parts — Cabinet Assembly TME650N Series

No.	Description	Page		
		Unpainted/standard	*Colour: White*	*Colour: Black*
1	Top hinge - RH	-	HB0070110582	-
2	Door lock bracket - cabinet piece	-	HB0070206938	-
3	Bottom hinge - RH	-	HB0070110851	-
4	Tension bracket	-	-	HB0070110580
5	Height adjustment block lock nut	-	-	HB0070110581
6	Controller clip	-	HB0070206333	-
7	Door sensor assembly (includes magnet)	HB0074091496	-	-
8	Rear castor	HB0070105066	-	-
9	Front castor lockable	HB0070105065	-	-
10	Shelf support strip	HB0070110331	-	-
11	Shelf clip	-	HB0070205867	-
12	Wire shelf	-	HB0070110864	-
13	LED light	ELL11771	-	-
14	Light power supply	ELZ11239	-	-

Notes: Check the part colour before ordering. If the colour differs from the list above, state the specific colour when ordering.

Cabinet Assembly - TME1000N-A Series

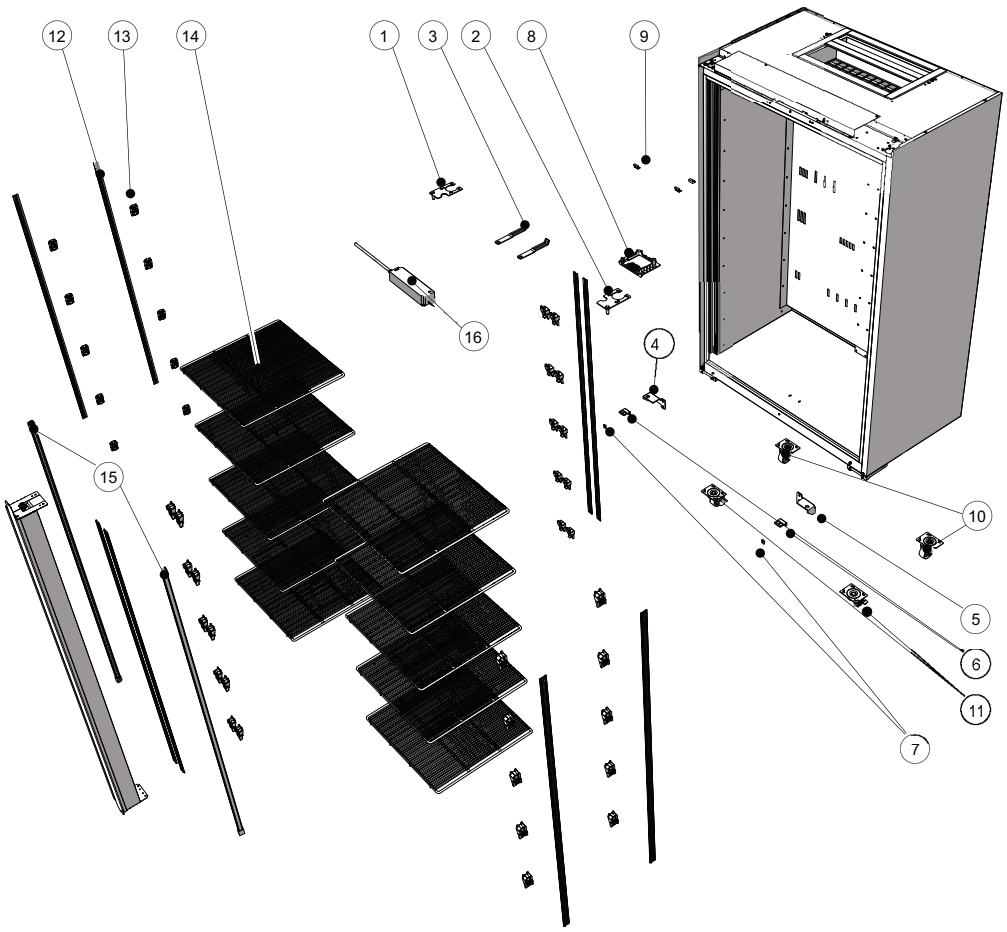

Parts — Cabinet Assembly TME1000N Series

No.	Description	Part No.		
		Unpainted/standard	*Colour: White*	*Colour: Black*
1	Top hinge - LH	-	HB0070110583	
2	Top hinge - RH	-	HB0070110582	
3	Door lock bracket - cabinet piece	-	HB0070206938	
4	Bottom hinge - LH	-	HB0070110850	
5	Bottom hinge - RH	-	HB0070110851	
6	Tension bracket	-	-	HB0070110580
7	Height adjustment block	-	-	HB0070110581
8	Controller clip	-	HB0070206333	
9	Door sensor assembly (includes magnet)	HB0074091496	-	-
10	Rear castor	HB0070105066	-	-
11	Front castor lockable	HB0070105065	-	-
12	Shelf support strip	HB0070110331	-	-
13	Shelf clip	-	HB0070205867	
14	Wire shelf - split (10 per cabinet)	-	HB0070110862	-
	Wire shelf - wide (5 per cabinet)	-	HB0070110863	-
15	LED light	ELL11771	-	-
16	Light power supply	ELZ11239	-	-

Notes: Check the part colour before ordering. If the colour differs from the list above, state the specific colour when ordering.

Glass Door Assembly

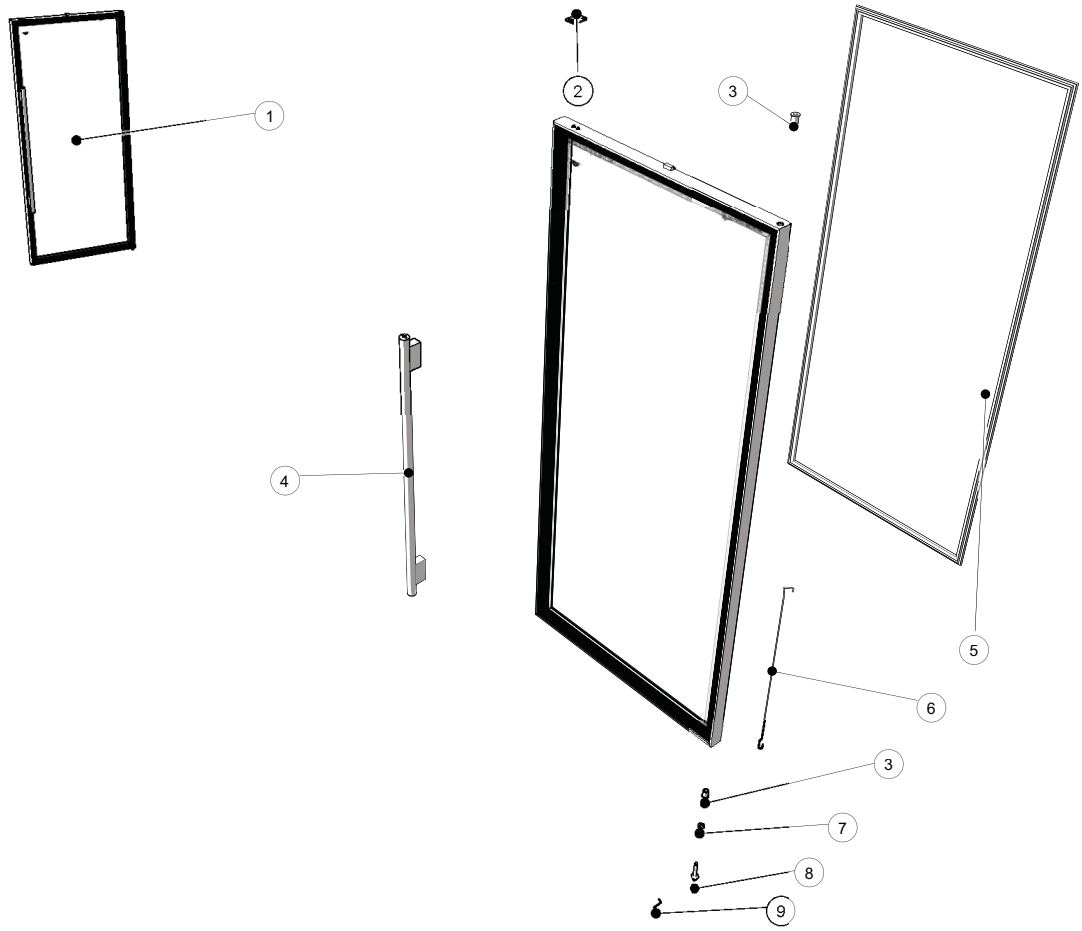

Parts — Glass Door Assembly

No.	Description	SKOPE Part No.		
		Unpainted/standard	*Colour: White*	*Colour: Black*
1	TME650N door assembly - RH	-	HB0070832242	-
	TME1000N door assembly - RH	-	HB0070832243	-
	TME1000N door assembly - LH	-	HB0070832244	-
2	Door lock bracket - door piece	-	HB0070111623	-
3	Bush	PLM5075	-	-
4	Door handle	-	HAN11195/0844-AS (silver, for white door)	-
5	TME650N Magnetic gasket	GKT0432SK	-	-
	TME1000N Magnetic gasket	GKT0572SK		
6	Torsion bar	REF5014	-	-
7	Bush washer	PLM11298	-	-
8	Capstan	SM12BV/396	-	-
9	Split pin	FAS5076	-	-
-	Hinge reversal kit (RH to LH) (single door only) (not pictured)	-	SM65BYN/D100-32	SM65BYN/D100-49

Notes: Check the part colour before ordering. If the colour differs from the list above, state the specific colour when ordering.

Sign Assembly

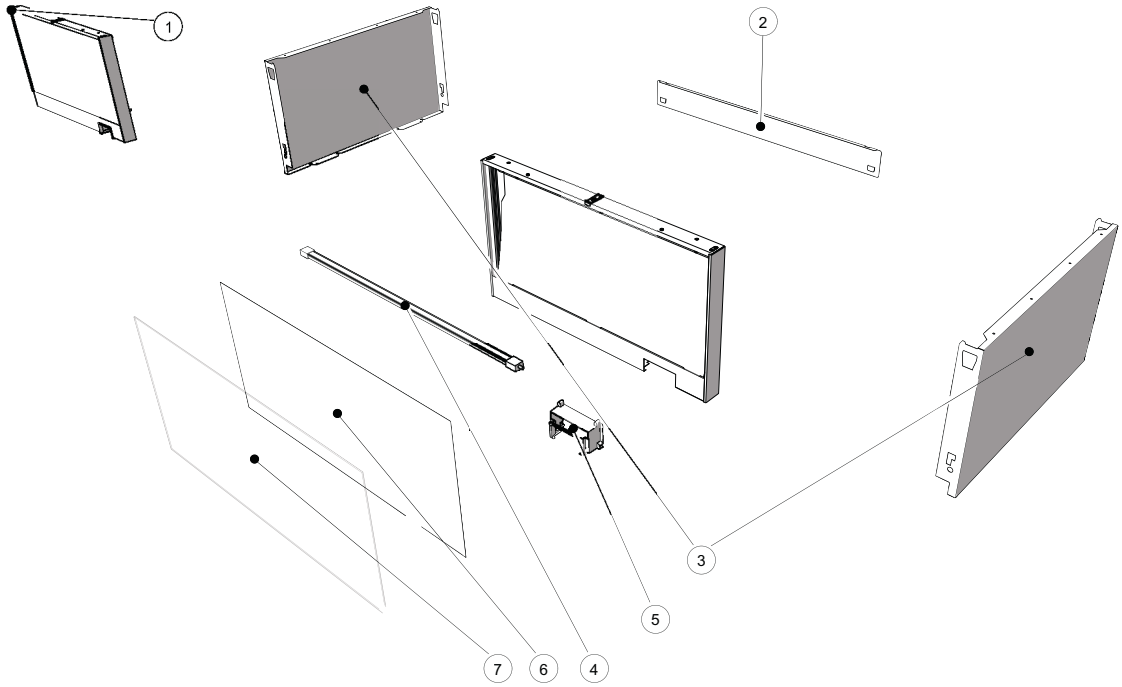

Parts — Sign Assembly TME650N-AC

No.	Description	SKOPE Part No.
1	Lit sign assembly	SM65BYN/T61
	Non-lit sign assembly (sign replacement panel)	HB0070825987
2	Sign back strip	HB0070110813
3	Sign side	SM65BV/182
4	Sign light bar (lit-sign)	ELL11772
5	Controller surround	HB0070206332
6	Sign panel (opal) (lit-sign)	PLY11242-MT65
7	Sign panel (transparent) (lit-sign)	HB0070206409

Parts — Sign Assembly TME1000N-AC

No.	Description	SKOPE Part No.
1	Lit sign assembly	SM10BYN/T61
	Non-lit sign assembly (sign replacement panel)	HB0070825986
2	Sign back strip	HB0070110812
3	Sign side	SM65BV/182
4	Sign light bar (lit-sign)	ELL11773
5	Controller surround	HB0070206332
6	Sign panel (opal) (lit-sign)	PLY11242-MT10
7	Sign panel (transparent) (lit-sign)	HB0070206408

Notes: Check the part colour before ordering. If the colour differs from the list above, state the specific colour when ordering.

Unit Assembly UTHCNI-0010

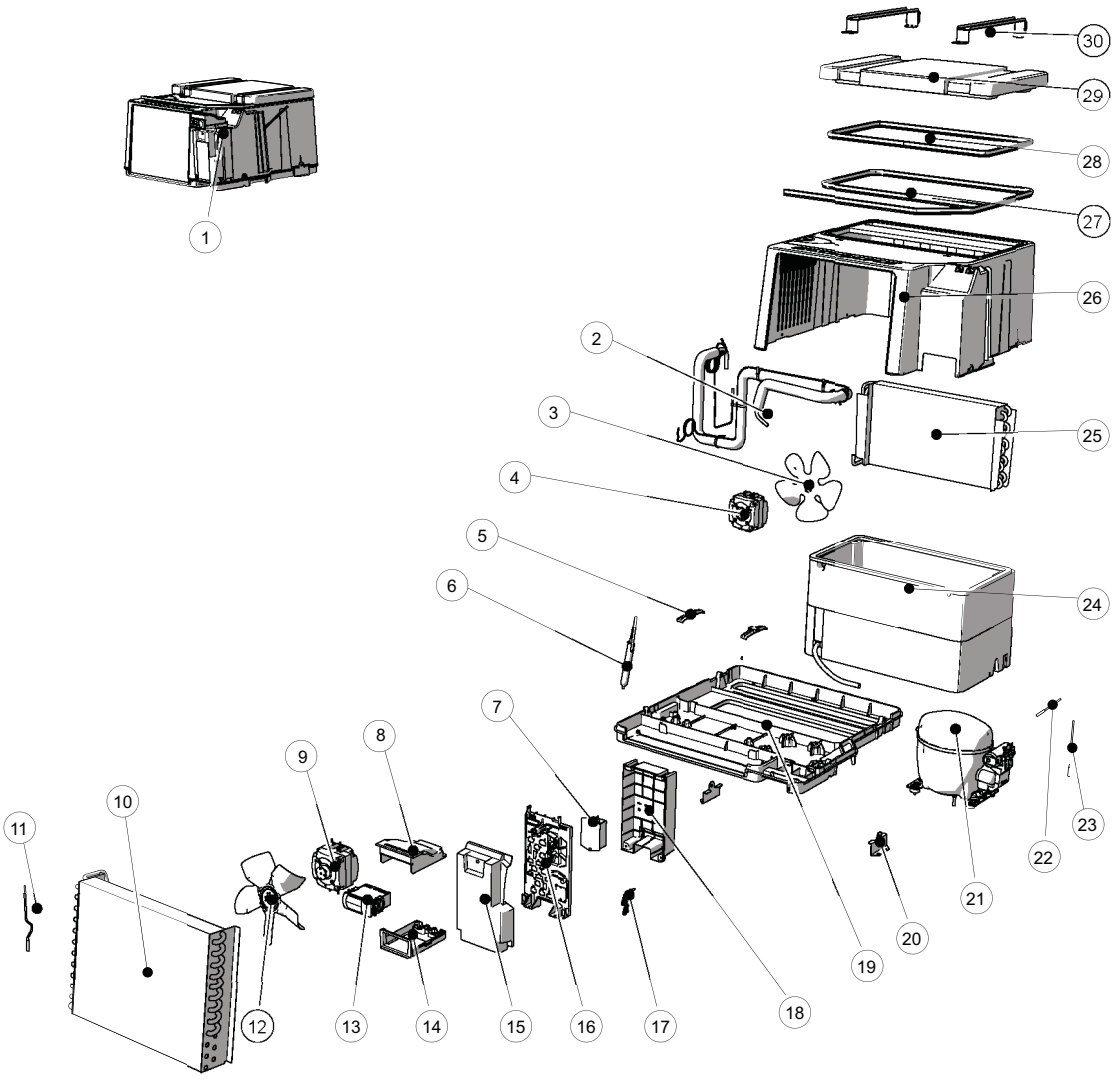

Parts — Unit Assembly

No.	Description	SKOPE Part No.
1	Unit assembly*	HB0070832517A
2	Suction line assembly	HB0070702718
3	Evaporator fan blade	HB0074000313A
4	Evaporator fan motor	ELM11309
5	Condensate pipe support	HB0070110674
6	Drier	HB0074180006
7	EMI filter	HB0074600001
8	Controller box cover	HB0070206126
9	Condenser fan motor	ELM11309
10	Condenser coil	HB0070702720
11	Condenser temperature probe	HB0070401693B
12	Condenser fan blade	HB0074000313
13	W/Drive SCS Connect electronic controller	ELZ11749-1626
14	Controller box base	HB0070206125
15	Unit electrics box enclosure front	HB0070207012A
16	Unit electrics box enclosure	HB0070207014
17	Cable clamp	HB0070206127
18	Unit electrics box enclosure rear	HB0070207013A
19	Unit plastic bottom	HB0070206212B
20	Hold down bracket	HB0070110815A
21	Compressor - Wanbao FN90M	HB0074000848
22	Control temperature probe	HB0070400542
23	Evaporator temperature probe	HB0070400506
24	Evaporator box	HB0070510928A
25	Evaporator coil	HB0070702232
26	Unit plastic top cover	HB0070206133
27	Unit gasket seal 2306mm	PLE11052-2306
28	Unit gasket seal 1571mm	PLE11052-1571
29	Evaporator box lid	HB0070511356
30	Top metal strap bracket	HB0070110816
-	Ambient temperature probe (not pictured)	HB0070401693B
-	Mains power cord (not pictured)	HB0070400636
-	TME650N Light loom (not pictured)	SM65BYN/X05
-	TME1000N Light loom (not pictured)	SM10BYN/X05

***Note**: When ordered as a spare part, the refrigeration unit does not include evaporator box lid, top metal strap bracket and hold down bracket. If required, these items must be ordered in addition to the refrigeration unit (items 22, 31 and 32).

6 Installation

Installation Guidelines

When installing this cabinet, ensure the installation guidelines below are considered and met.

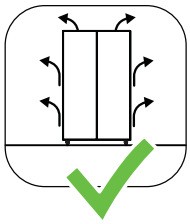

Ventilation
Ensure all ventilation requirements below are met.

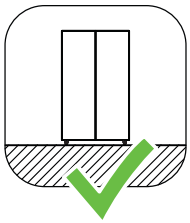

Surface
The installation surface must be capable of supporting the loaded cabinet.

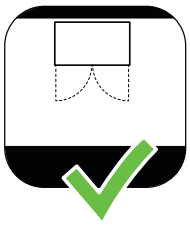

Door Opening
Allow adequate space for the door/s to open and close properly.

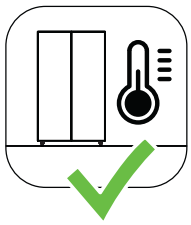

Climate Class
The chiller must be installed in an environment within its climate class.

The climate class is stated on the cabinet rating label inside the chiller.

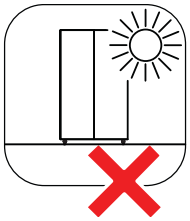

Sunlight
Do not install the chiller in direct sunlight.

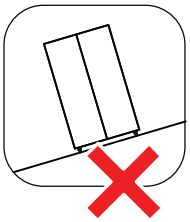

Uneven Surface
Do not install the chiller on an uneven surface.

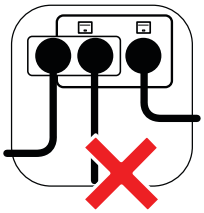

Power Supply
Do not overload the power supply.

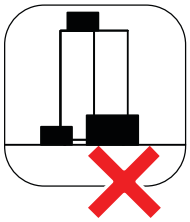

Blocking Ventilation
Do not store boxes or items in front or on top of the chiller.

Ventilation Requirements

This chiller must have the following ventilation clearances at all times.

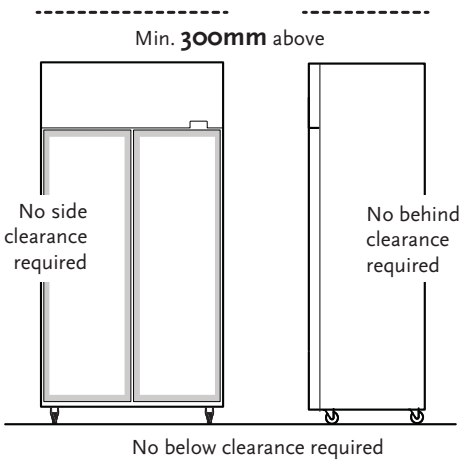

Door Handles

Fitting Door Handles

For transit purposes the door handles may be packed separately inside the cabinet. If the door handles are packed separately, follow the steps below to fit them to the door/s.

To fit a door handle

1. Remove the handle/s from inside the cabinet by carefully cutting the cable ties securing the handle, and remove the packaging.

2. A metal spring clip is fitted inside the handle mounts at each end of the handle.

   Ensure that the spring clips point up.

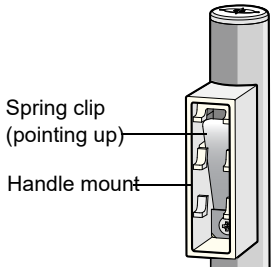

3. Locate **BOTH** handle mounts simultaneously onto both door brackets.

   Then push the handle down onto the brackets, until the handle locks into place.

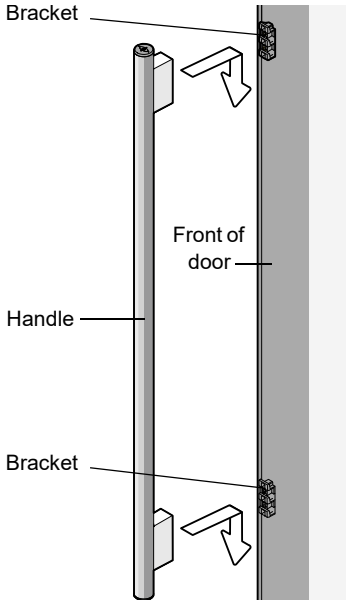

CAUTION
Ensure **BOTH** handle mounts are located before pushing down.

4. If the handle does not lock into place, check that the spring clips are pointing up and try again.

   If only one end of the handle locks into place, unscrew the door handle (see over page), and refit ensuring both of the handle mounts are located onto the brackets before pushing the handle down and locking into place.

Removing Door Handles

The door handles can be removed for transporting and moving the cabinet through doorways, or for refitting.

To remove a door handle

1. Open the door, and peel back the door gasket from behind the handle mounts on the inside of the door frame.
2. Unscrew the handle mounts through the holes on the inside of the door frame (top and bottom screws only), and remove the handle.
3. Remove the bracket/s from the handle mount by pressing the bracket in and down until it unclips from the handle mount.

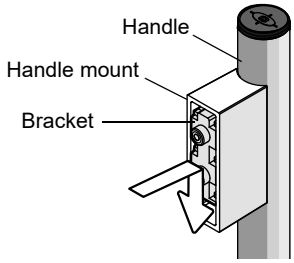

4. Fit and screw the bracket/s back onto the door. Ensure the catches are pointing up as pictured.

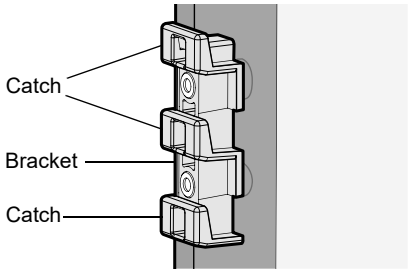

5. Refit the door gasket by clipping it back into place on the inside of the door frame. If the gasket is out of shape after refitting it, a hair drier can be used to heat and reshape it.

Shelves

The chiller is fitted with five wire shelves per door, which may be positioned at different heights to suit various products

Shelf Clips

Each wire shelf is held in place with four shelf clips, which engage in the shelf support strips and slide up and down to the desired shelf position.

The support strips are numbered for easy location of shelf clips. View the numbers in the bottom LH corner of the shelf clip.

To fit a shelf clip

1. The shelf clip twists onto the shelf support strip. Position the shelf clip with the flat side up against the shelf support strip and the two prongs pointing up. Twist the top of the clip anticlockwise onto the shelf support strip until it locks in place.

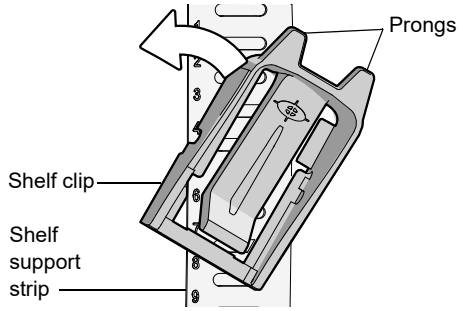

To adjust the shelf clip height

1. Pull the shelf clip tab up and slide the shelf clip up or down as required. Once in position, ensure the shelf clip is locked into place.

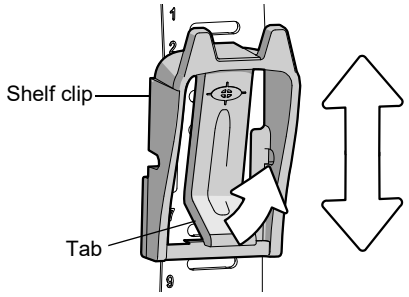

To remove a shelf clip

1. Pull the shelf clip tab up and twist the top of the clip clockwise off the shelf support strip.

Repositioning Shelves

When repositioning standard shelves, unload and remove the shelf, establish the desired position and slide the shelf clip in each of the shelf support strips to the desired position (see “To adjust the shelf clip height” on page 29). Sit the shelves on the shelf clips.

7 Replacement Procedures

Lighting

The cooler is fitted with LED modular interior lights, and TME-AC models are also fitted with an LED modular sign light. Ensure the light is replaced with the same light type. Fluorescent or LED tubes cannot be used in place of LED modular lights.

IMPORTANT

Replace the light with the same SKOPE OEM part.

DO NOT use alternative LED strip or tube lights, or fluorescent tubes.

Refer to the table below for replacement light specifications.

Light specifications

Model	**Interior light**		**Sign light**	
	Description	*Part No.*	*Description*	*Part No.*
TME650N-A	Interior light	ELL11771	n.a.	n.a.
TME650N-AC			Sign light	ELL11772
TME1000N-A			n.a.	n.a.
TME1000N-AC			Sign light	ELL11773

The lighting is made up of three components which are replaceable:

- LED modular light
- Light power supply (1 per cabinet)
- Interior wiring loom (1 per door)

Power is supplied to the lights by the power supply (located in the cabinet electrics panel above the door/s) via the wiring loom/s which run down the sidelight channel.

Lighting components are all non serviceable items. If a component is faulty, it should be removed and a SKOPE OEM new replacement component fitted.

Refer to the diagnostics table below to determine what component may be at fault, and the procedures over the next few pages for component replacement instructions.

Ensure the cabinet is isolated from the power supply before cleaning or removing parts.

Lighting fault diagnostics

Problem	Possible Cause	Repair
No lights working. Cabinet is dark.	Lights switched off.	Switch lights on at electronic controller faceplate (see page 9), or the app.
	Controller is in Energy Saving mode.	Open the door to bring the controller into Normal mode.
	Controller alarm.	Check controller for alarm code.
	Plug not connected properly.	Check and clean plugs on top of the cabinet.
	Light power supply fault.	Replace light power supply.
Light component not working.	Plug not connected properly.	Check and clean plug connection in side light channel, behind the loom cover.
	Faulty light.	Replace light.
Segment of light not working.	Faulty light.	Replace light.

To replace an interior light component

1. Unplug the chiller from the power supply.
2. Unplug the light, and remove the light from the plastic casing.
3. Clip the replacement light into place on the plastic casing, ensuring the male end of the light is at the top, and plug the light in.



4. Ensure the light is firmly and completely clipped in.
5. Reconnect to the power supply and check for correct operation.

To replace the LED driver power supply

1. Disconnect the chiller from the power supply.
2. Remove the sign panel.
3. Detach the refrigeration unit and carefully push back or remove to allow access to the cabinet electrics cover.

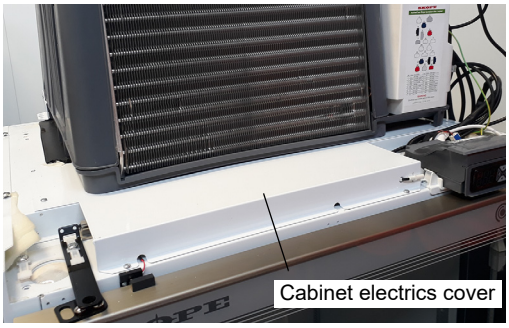

4. Unscrew the cabinet electrics cover.
5. Remove the light power supply.

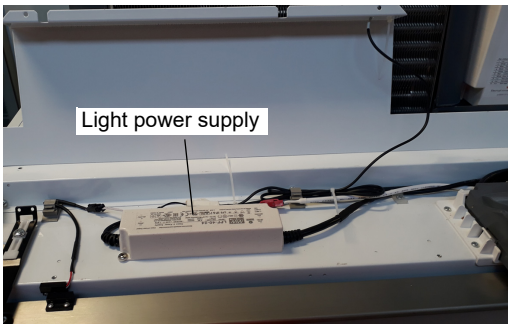

6. Replace the light power supply and reassemble.

To replace an interior wiring loom

1. Disconnect the chiller from the power supply.
2. Unplug the light from the wire loom.
3. Gain access to the cabinet electrics panel (see procedure above).
4. Move up to the cabinet roof, and unplug the wiring loom from the light power supply, and if applicable the sign light.
5. Remove the putty from the loom entry point on the cabinet roof, and pull the loom up through the cabinet ceiling.
6. Refit the new loom and reassemble. Ensure:
   - All plugs are clean, correctly fitted and plugged in.
   - That the ceiling and roof hole is completely sealed with putty.

Sign Light

The sign is lit by an LED modular light which can be replaced by following the steps below.

To replace the sign light

1. Disconnect the chiller from the power supply.
2. Undo the two fixing screws from the sign top cover and remove the top cover.
3. Remove the front sign panel/decal by sliding them up and out of the sign.
4. Remove the sign cover from the top of the sign.
5. Remove additional sign panel by sliding up and out of the sign.
6. Cut the cable tie holding the light cable at the back of the sign.
7. Undo the two most RH sign reflector screws.
8. Carefully pull the light plug and cable through to the front of the sign, manipulating the reflector as required.
9. Unclip and replace the light.

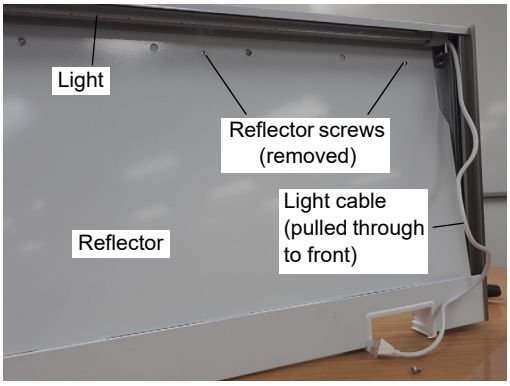

10. Rout the light plug and cable back through behind the reflector and hole at the back of the sign, and cable tie in place.
11. Reassemble the sign, reconnect to the power supply and check for correct operation.

Doors

WARNING
For safe door operation the door bottom hinge bracket must always be fitted with a split pin.

Alignment Adjustment

If a door is out of alignment, realign it by loosening the top hinge bracket fixing screws, and move the top of the door as required.

Height Adjustment

A height adjustment block is fitted below the bottom hinge. As standard, the notched edges on the bottom of the hinge and the top of the height adjustment block align to set the door to the correct level. If the door is not at the correct height when at the standard setting, follow the steps below to adjust the height.

Note: The door height cannot be adjusted on the middle door on three door models.

To adjust the door height

1. Disconnect the chiller from the power supply.
2. Loosen off the bottom hinge, and remove the height adjustment block.

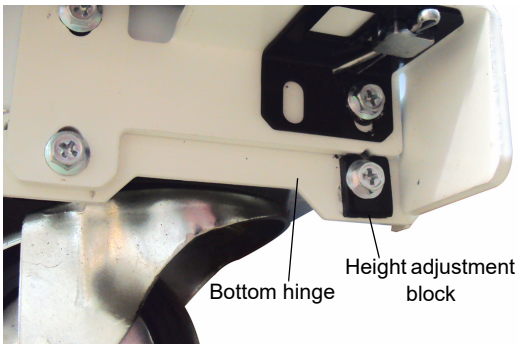

3. Set the door to the correct height, rotate and refit the height adjustment block to the most appropriate setting and tighten up the bottom hinge screws.

Replacing the Gasket

The one-piece door gasket clips into the door frame and runs around the perimeter of the door. Remove the gasket by peeling it from the door frame, starting at a corner.

If the gasket is out of shape after refitting, use a hair dryer to heat and reshape it.

Removing and Refitting the Door

For ease of servicing and to reverse the hinging, the door can be removed from the cabinet.

To remove the door

1. Disconnect the chiller from the power supply.
2. Remove the sign panel and sign sides.
3. Single door cabinets only:

   Detach the refrigeration unit and carefully push back to allow access to the top hinge.

Continued over page

4. Remove the split pin from the capstan at the bottom hinge (outside door pictured).

5. Unscrew and remove the tension bracket. Take care when removing as the bracket is under tension.

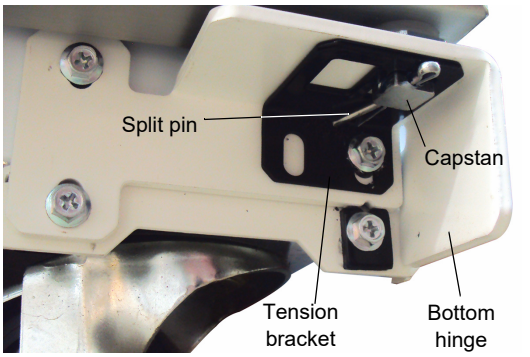

6. Unscrew the top hinge, and lift the door up and off the cabinet.

To replace the top hinge bracket (if necessary)

1. Follow the steps on the previous page to remove the door.
2. Remove the top hinge from the top of the door and replace.

To refit the door

1. Lift the door onto the bottom hinge.
2. Fit the top hinge to the top of the door, and partially fix in place on the top of the cabinet. Align the door with the cabinet and tighten the fixing screws.

   Ensure the top hinge spacer is fitted under the top hinge before fixing the top hinge in place.
3. Apply tension to the door (see page 36).
4. Fit the split pin through the hole in the capstan to lock the door in place (outside door pictured).
5. Fit the height adjustment block to the bottom screw hole (not fitted to middle doors). As standard, the notched edges on the bottom of the hinge and the top of the height adjustment block align to set the door to the correct level. If necessary, rotate the height adjustment block to level the door.

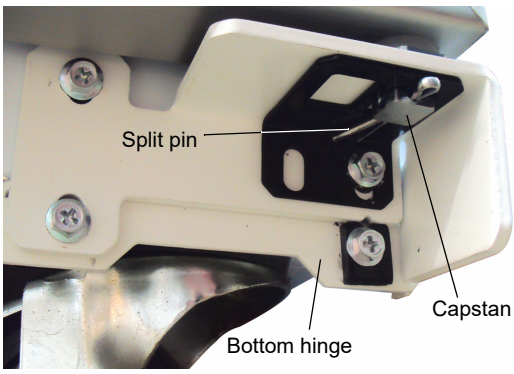

Adjusting Door Tension

The door has an internal torsion bar, pretensioned at the factory, that lets the door self-close. If necessary, the door tension can be further adjusted by rotating the capstan mounted in the bottom hinge bracket.

To adjust the door tension

1. Remove the split pin from the capstan at the bottom hinge.
2. Remove the tension bracket from the bottom hinge.
3. Use a tool to apply tension to the door via the capstan. First, rotate the capstan against the door opening direction to remove any slack. Once resistance is felt, continue to rotate 180° to provide tension.

   While holding door tension on the capstan, fit the tension bracket to the top screw hole so that it supports the door tension on the capstan.

   Outside door pictured.

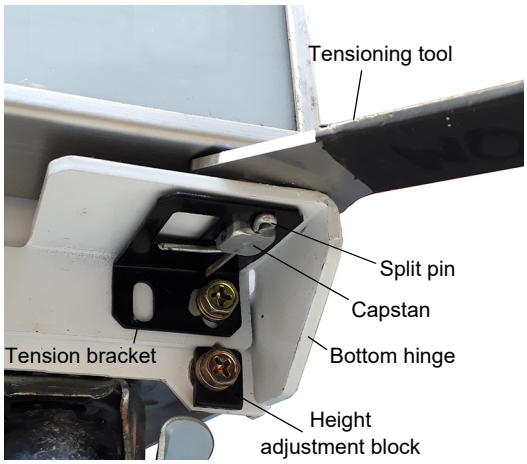

4. Fit the split pin through the hole in the capstan to lock the door in place.
5. Check door tension by holding the door open about 100mm and letting it go. The door should gently close, with the gasket forming an airtight seal with the cabinet.

Replacing the Torsion Bar

When the door tension can no longer be adjusted, replace the torsion bar.

To replace the torsion bar

1. Remove the door from the cabinet (see page 34).
2. Lever the capstan, bush and bush washer from the bottom of the door, and unhook from the torsion bar.

   Note: The torsion bar cannot easily be removed from the door. Cut the old torsion bar and push it into the door frame.

   Fit the capstan, bush and bush washer to the new torsion bar, and fit this assembly into the bottom of the door.

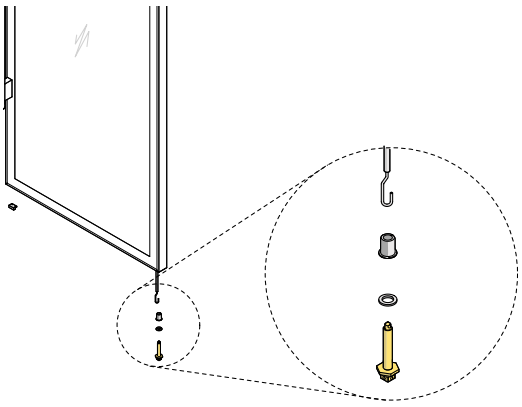

3. Refit the door (see page 34).

Hinge Reversal

The single door cabinet is supplied with the door hinged on the RH side. If required, the hinge can be swapped to the LH side. Some spare parts are required to complete the procedure, and are available in the LH Hinge Kit.

To reverse the door hinging

1. Remove the door from the cabinet (see page 34).
2. Remove the door lock bracket from the top of the cabinet.
3. Remove the bottom hinge, tension bracket and height adjustment block. Retain the tension bracket and height adjustment block (these are fitted to the opposite side once the door is refitted). The bottom hinge can be discarded.
4. Unplug the door switch cable from the cabinet. The door switch is fitted to the door switch bracket, above the door.
5. Fit the new bottom hinge.
6. Remove the door lock bracket from the door, and fit to the opposite end.
7. Remove the bush and retain for the other end of the door.
8. Remove the capstan, bush and bush washer, and unhook from the torsion bar.

   Note: The torsion bar cannot easily be removed from the door. Push the torsion bar into the door frame.

   Fit the capstan, bush and bush washer to the new torsion bar, and fit this assembly to the opposite end of the door.

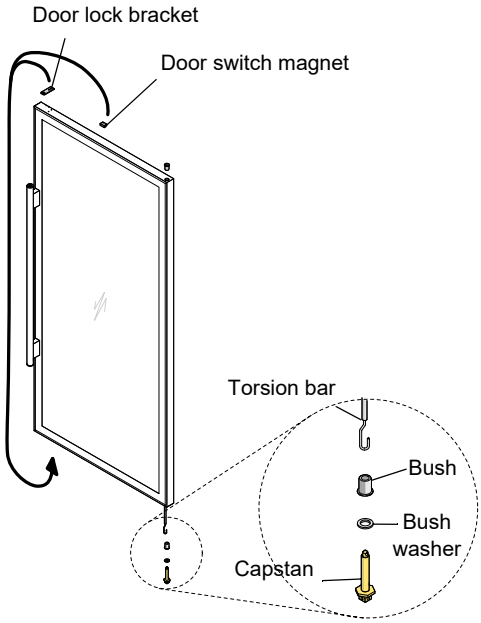

9. Fit the bush (retained from step 7) to the end of the door, opposite the capstan.
10. Remove the door switch magnet from the end of the door, and fit to the opposite end.
    Note: Ensure the magnet is orientated correctly and does not protrude past the frame edge.
11. Refit the door (see page 34).
12. Apply the SKOPE logo label to the top LH corner of the door. Use the label backing to align the label as pictured.



13. Apply the blanking labels over the upside down logos at the bottom of the door.



Refrigeration Unit

Before Servicing

Overview

Ensure you have read and understand this manual before commencing with any servicing.

Important. Ensure the following before servicing:

- Only technicians contracted to SKOPE hydrocarbon service policy may service this cabinet.
- SKOPE hydrocarbon refrigeration systems must only be serviced by appropriately skilled refrigeration mechanics.
- Servicing of sealed refrigeration system must be completed at a hydrocarbon workshop/service area with dedicated hydrocarbon equipment and personal protective equipment.
- All local hydrocarbon storage and handling regulations and procedures must be adhered to at all times.

Ensure all electronic controller alarms diagnostics and refrigeration system diagnostics are performed to confirm a refrigeration system fault is present. Do **NOT** open the refrigeration system. Check all components such as the electronic controller and electrical systems. If a sealed system fault is suspected, the system must not be opened; it must be sent to a SKOPE approved service depot for repair.

IMPORTANT

Use only dedicated hydrocarbon SKOPE OEM spare parts.

DO NOT use alternative parts.

For safety compliance, only SKOPE supplied components specified for the appliance shall be used for repairs.



Safety hazards

The main hydrocarbon safety hazards are:

- Flammable refrigerant.
- Venting of hydrocarbon and compressor oil.
- Asphyxiation.

Refrigerant identification

The cabinet rating label (located in the upper inside of the cabinet) states the refrigerant type. In addition to this, a warning labels are fitted to hydrocarbon refrigeration coolers to indicate the use of R290 refrigerant.

Personal Protective Equipment

Ensure all required P.P.E is used correctly during servicing.

Service equipment

All refrigeration service tools must be hydrocarbon compliant and any electrical equipment that could be exposed to the refrigerant must be intrinsically safe. ONLY dedicated hydrocarbon service equipment may be used.

In addition to standard tools for accessing and removing parts, specialist tools are required when completing refrigeration system service tasks detailed in this manual:

- Intrinsically safe vacuum pump.

- Dedicated hydrocarbon gauges.
- Intrinsically safe hydrocarbon combustible gas leak detector.
- Intrinsically safe scales to 0.1gm accuracy.
- Well ventilated work area.

Refrigeration Unit Assembly

The refrigeration unit is a top mounted, electronically controlled removable unit.

For safety and compliance, only SKOPE supplied parts specifically for this appliance may be used for repairs. Other parts may appear to be suitable, but may not be approved or safe for use in an appliance with hydrocarbon refrigerant.

The unit must only be used on a SKOPE Hydrocarbon compliant cabinet. Refer to the cabinet rating label to determine if the cabinet is suitable for use with a hydrocarbon unit. The rating label MUST state refrigerant as R290. If the label states a different refrigerant, or does NOT state a refrigerant, it is NOT suitable for a hydrocarbon unit.

WARNING
The hydrocarbon unit must only be used on an hydrocarbon compliant cabinet.

For servicing or transportation, the refrigeration unit unplugs and lifts off the cabinet. Some minor servicing can be performed without removing the refrigeration unit.

The model and serial number are both printed on the unit rating/serial number label attached to the top of the side of the cover.

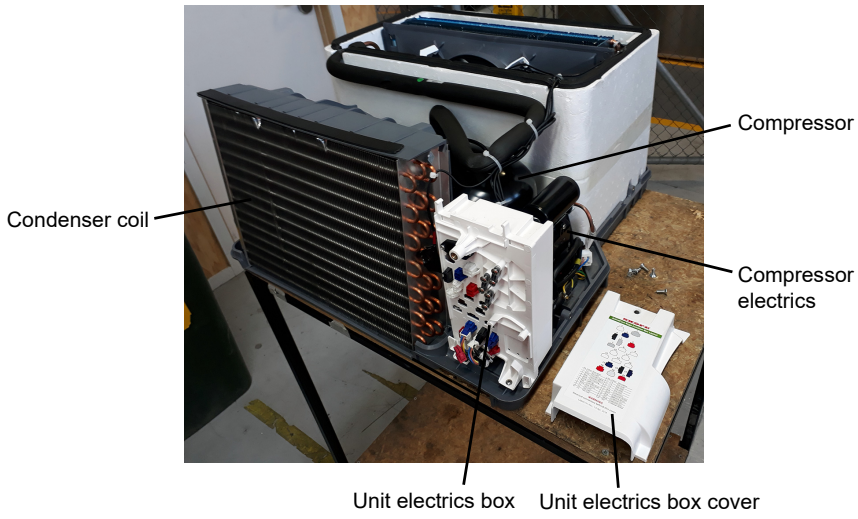

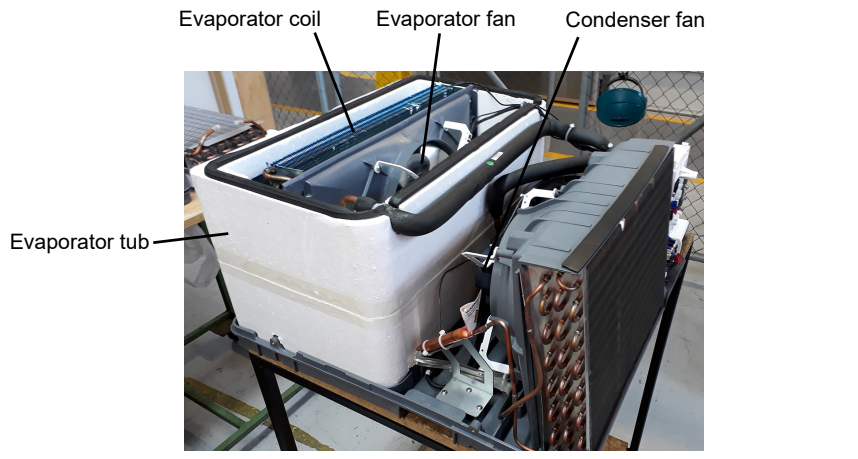

Specifications for the model are in the following table. Verify model and basic requirements before servicing.

Unit specifications

Unit Model:	UTHCNI-0010 (spare part number: HB0070832517)
Compressor:	Wanbao FN90M
Compressor capacity:	740 Watts
Refrigerant / Charge	R290 / 99 g

Gas Detector

A gas detector is required and must be used when servicing HC units. A gas detector is a safety device for Hydrocarbon gas to warn the technician that hazardous flammable gas is present.

Leak Detector

A leak detector is recommended for servicing HC units. It is used to track and locate the source of Hydrocarbon gas leaks.

On-Site Work

The service technician must have required knowledge, skills and tools to proceed with on-site refrigeration sealed system diagnostics.

Minimum knowledge and skills

- Experience and qualifications suitable for work on a flammable refrigeration system.
- Performs no unsafe activity.
- Fully complies with SKOPE HC service policy.

Minimum tools and equipment

- Hydrocarbon gas detector
- Safety signage - suitable to create a safe work zone 1.5m around the cabinet.
- Refrigeration gauge set - suitable for R290 flammable refrigerant.
- Bullet valves/line piercing valves suitable for 6mm tube.

Service vehicle

- Suitable for transporting flammable gas (being HC refrigeration systems). Vehicle storage area must be well ventilated externally, and not ventilated into the vehicle. There must be no ignition sources in the storage area, nor any areas where the gas may pool.
- Must be able to transport swap units.
- Should carry minimum SKOPE HC service parts.

Not Cooling Fault

If a customer reports a ‘not cooling’ fault, and it has been established that the cabinet is not cooling, follow the procedure on page 58 when making the service visit.

Hydrocarbon Workshop

The following tools and equipment are required in the hydrocarbon workshop:

- Hydrocarbon Leak Detector.
- Dedicated Hazardous workshop Area - suitable for servicing and release of flammable refrigerant.
- Refrigeration Gauge set - suitable for R290 flammable refrigerant.
- Dry Nitrogen - suitable for purging and high pressure testing.
- Refrigeration Vacuum pump rated as suitable for use with R290 (by Vacuum pump supplier).
- Charging scales rated as suitable for use with R290 (by scales supplier), accuracy to 1.0gm.
- R290 refrigerant supply cylinder.

Removing the Unit

Follow the steps below to remove the refrigeration unit from the cabinet. Ensure the chiller is disconnected from the power supply before removing the unit.

The unit is heavy and requires a minimum of two people to lift from the cabinet. Steps or a platform about one metre high are suggested to allow the unit to be safely lifted, carried and put down at waist height.

To remove the refrigeration unit

1. Unplug the chiller from the power supply.
2. Remove the top sign. If fitted with key locks, open the door/s and unscrew the sign from the brackets below the sign.
3. Detach the electronic controller assembly from the top of the cabinet, and clip it onto the top of the unit.
4. Remove electrics cover and unplug the mains supply plug and cabinet plugs.

   Note: The unit plugs (plugs feeding into the unit) and electronic controller plugs (plugs feeding to the electronic controller assembly) do not need to be unplugged.
5. Remove the sign back strip. **Note:** If necessary the sign sides can also be removed.
6. Undo the two unit fixing screws (one on each side of the unit) and lift the unit off the cabinet.
7. When refitting the unit, ensure:
   - The gasket on the top of the cabinet is in good condition.
   - The mains and cabinet plugs are reconnected.
   - The electrics cover is refitted.
   - The unit is re-fixed in place.

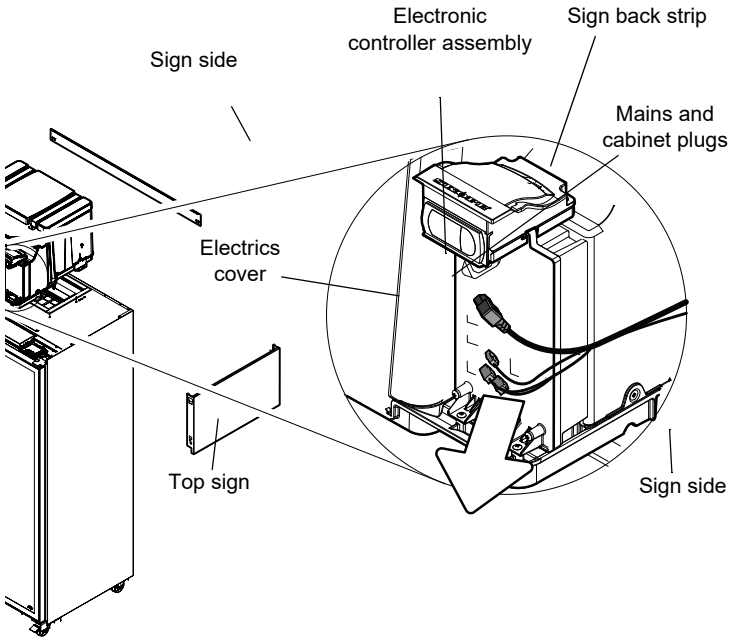

Replacing the Unit

The SKOPE ActiveCore refrigeration unit is interchangeable between bottom and top mount hydrocarbon (R290) ActiveCore chillers.

WARNING
The hydrocarbon unit must only be used on a hydrocarbon compliant cabinet.

When interchanging from a bottom mount chiller to a top mount chiller, an evaporator lid, strap brackets and hold down brackets must be fitted to seal the top of the evaporator tub, and to fix the unit to the top of the cabinet.

New spare part refrigeration units supplied by SKOPE are not supplied with the evaporator tub lid, top strap brackets and hold down brackets. When replacing a faulty top mount refrigeration unit, retain these parts for use on the new spare part replacement unit.

The evaporator tub lid, top strap brackets and hold down brackets can be ordered in addition to the refrigeration unit if required. See page 25 for spare part numbers.

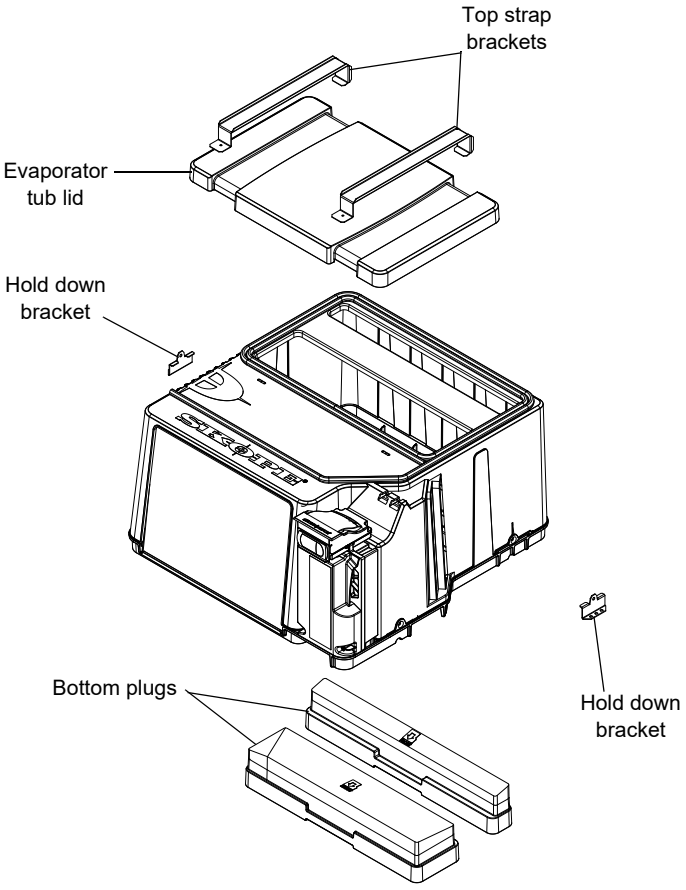

To replace a unit with a SKOPE supplied spare part refrigeration unit

1. Disconnect the chiller from the power supply and remove the existing unit (see page 41).
2. On the new unit, push the bottom plugs out of the bottom of the evaporator box.
3. Swap the evaporator tub lid, top strap brackets and hold down brackets from the existing unit to the new unit.
4. Fit the new unit to the cabinet.

Unit Electrics Box Assembly

The unit electrics box assembly contains the mains supply socket, EMI filter and panel mount socket connectors for the unit and cabinet. Refer to the diagram over the page or label on the electrics box cover for socket connection identification.

Due to the confined space within the unit electrics box, plugs may come loose as a result of movement and vibrations. Take care when refitting to ensure all plugs are securely attached to the correct sockets.

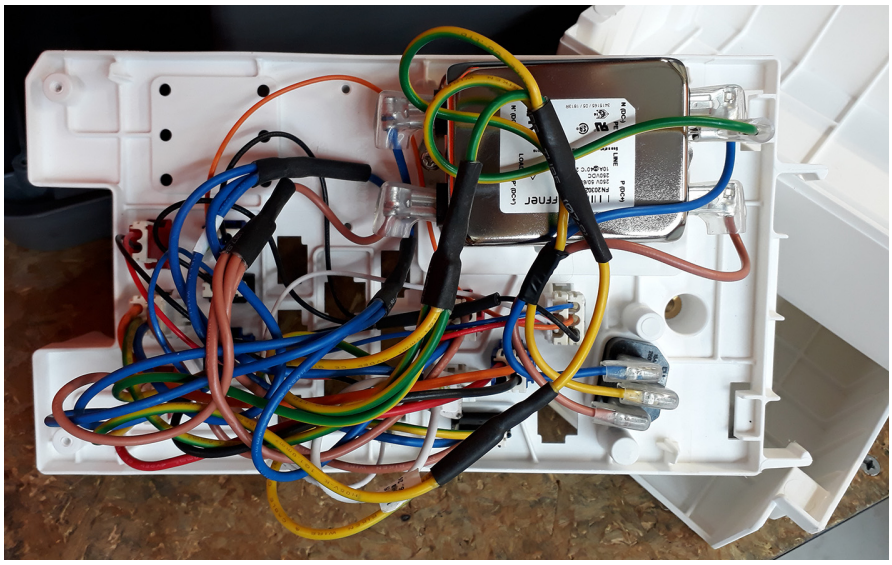

To remove and open the unit electrics box assembly

1. Disconnect the chiller from the power supply.
2. If present, unclip the electronic controller from the top of the electrics box.
3. Undo the fixing screw at the top of the electrics box cover, and remove the cover.

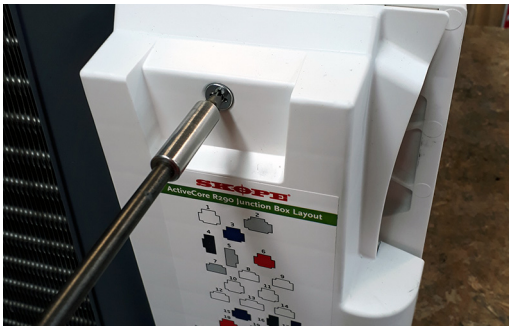

4. Unplug all unit plugs from the unit electrics box.
5. Undo the two fixing screws at the base of the electrics box, and detach the electrics box from the unit.
6. To open the electrics box, undo the two fixing screws on the back of the electrics box and swing the back cover off.

ActiveCore R290 Junction Box Layout

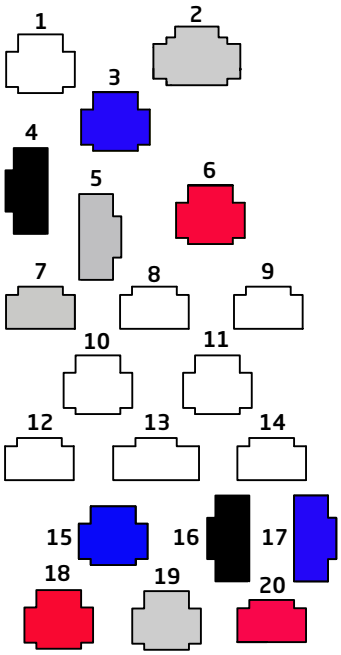

Key	Colour	Description	Key	Colour	Description
1	n.a.	Not used	11	n.a.	Not used
2	White	Controller Signal	12	n.a.	Not used
3	Blue	Controller Return	13	n.a.	Not used
4	Black	Trace Heating	14	n.a.	Not used
5	White	Lighting	15	Blue	Compressor
6	Red	Controller Power	16	Black	Evaporator Sensor
7	White	Door Sensor	17	Blue	Appliance Sensor
8	n.a.	Not used	18	Red	Condenser Fan
9	n.a.	Not used	19	White	Evaporator Fan
10	n.a.	Not used	20	Red	Condenser Sensor

Unit Cover

Remove the unit cover to access parts within the unit assembly.

To remove the unit cover

1. Disconnect the chiller from the power supply and remove the refrigeration unit (see page 41).

2. Unscrew the four machine screws from the sides of the refrigeration unit and lift the cover off the unit.



Condenser Fan

The condenser fan assembly is made up of a fan motor, fan blade and mounting brackets which can be replaced if necessary.

If the fan stops for any reason, check all connections to ensure no plugs have come loose. Refer to the label on the electrics box cover to identify the condenser fan plug and socket in the electrics box.

IMPORTANT

Replace the motor with the same SKOPE OEM part.

DO NOT use alternative parts.

It is important that the fan blade and/or fan motor is replaced with the same part to ensure safety, correct alignment and refrigeration performance, and compliance. Fan blades should be tightened to the fan motor manufacturer recommended torque settings (shown in the table below).

Fan motor manufacturer recommended torque settings

Fan motor manufacturer	Torque setting
Wellington Drive	1.5 Nm

To access and remove the condenser fan assembly

1. Isolate the chiller from the power supply and remove the refrigeration unit (see page 41).
2. Remove the unit cover (see page 44).
3. Open the electrics box and unplug the condenser fan motor plug (see page 43).
4. Cut the cable ties holding the cables along the unit, and free up the condenser fan motor cable.



5. Remove the fan assembly (fan motor, fan blade, mounting brackets) from the unit by lifting the shroud up and out.

To replace the fan blade

1. Remove the condenser fan assembly (see above).
2. Remove the screw and washer from the centre of the fan blade, and lift the blade from the motor.
3. Replace new blade and fix with 12mm flat washer and serrated head screw. Tighten the blade to fan motor manufacturer recommended torque setting.
4. Reassemble unit and test.

To replace the fan motor (with correct SKOPE spare part only)

1. Remove the condenser fan assembly and the fan blade (see above).
2. Unplug the fan flexible cord from the electrics box (see page 43).
3. Detach the fan motor from the fan mounting brackets by removing the four screws from the mounting bracket.
4. Fit new motor and reattach fan blade with 12mm flat washer and serrated head screw. Tighten the blade to 1.5Nm.
5. Reassemble unit, ensuring all cables are neatly cable tied away from the fan blade, and test for correct operation.

Evaporator Fan

The evaporator fan assembly is made up of a fan motor and fan blade, both of which can be replaced when necessary. The evaporator fan flexible cord has a white plug.

If the fan stops for any reason, check all connections to ensure no plugs have come loose. Refer to the label on the electrics box cover to identify the evaporator fan plug and socket in the electrics box.

The fan motor and fan blade are fixed to the evaporator shroud via the brackets. The shroud (complete with fan motor and fan blade) can be lifted off the evaporator tub once the refrigeration unit cover has been removed.

IMPORTANT

Replace the motor with the same SKOPE OEM part.

DO NOT use alternative parts.

It is important that the fan blade and/or fan motor is replaced with the same part to ensure safety, correct alignment and refrigeration performance, and compliance. Fan blades should be tightened to the fan motor manufacturer recommended torque settings (shown in the table below).

Fan motor manufacturer recommended torque settings

Fan motor manufacturer	Torque setting
Wellington Drive	1.5 N m

To access the evaporator fan assembly

1. Isolate the chiller from the power supply and remove the refrigeration unit (see page 41).
2. Remove the refrigeration unit cover.
3. Free up cables from the putty on the evaporator tub perimeter.
4. Cut cable ties to release control probe from the fan bracket.
5. Lift the assembly up and out of the evaporator box.



To replace the fan blade

1. Isolate the chiller from the power supply and remove the refrigeration unit (see page 41).
2. Gain access to the evaporator fan assembly (see above).
3. Remove the screw and washer from the centre of the fan blade, and lift the blade from the motor.
4. Fit new blade, ensuring it is centred within the evaporator shroud. Tighten the blade to fan motor manufacturer recommended torque setting.
5. Reassemble unit and test for correct operation.

To replace the fan motor (with correct SKOPE spare part only)

1. Follow the above steps to access the evaporator fan assembly and remove the fan blade.
2. Free the fan flexible cord by cutting the cable ties, trace the cable back to the connector (near the compressor electrics) and unplug.
3. Detach the fan motor from the fan mounting brackets by removing the four screws from the mounting bracket.
4. Attach to the replacement motor. Ensure that the flexible cord points towards the bottom of the evaporator tub once reinstalled. Take care to re-cable tie the fan and temperature probe flexible cords back onto the mounting bracket (to prevent high frequency vibration).
5. Fit fan blade, ensuring it is centred within the evaporator shroud. Tighten the blade to 1.5Nm.
6. Reassemble unit and test for correct operation.

Compressor

The compressor is located at the front of the refrigeration unit, beside the condenser. If the compressor is causing excessive noise, check the mountings to ensure there is no damage to the rubber or the washers, nuts and screws.

Before replacing the compressor, check all plug connections and ensure the compressor electrics are operating correctly (see “Compressor Electrics” on page 47). The compressor must be supplied with consistent voltage over 220 volts, ensure the voltage does not drop at start-up. If the voltage does drop, ensure the unit has a direct power supply (not from a multi-box or extension cord). Generally a faulty compressor may have a distinct hissing sound and run with a very hot body temperature.



IMPORTANT
To eliminate possible vibration noise, ensure no pipes touch the plastic base and condenser assembly.

Compressor Electrics

The compressor electrics are located on the front of the compressor.

To access the compressor electrics, remove the refrigeration unit (see page 41) and unit cover (see page 44). The capacitor unclips from the relay cover, and the relay cover unclips from the compressor.

Refrigeration System

Unit Removal

For detailed instructions on removing the unit, refer to unit removal instructions available on the instruction sheet attached to the back of the sign panel, or on page 41 of this service manual.

Diagnostics

The following diagnostic test is useful for workshop diagnosis of a short of gas situation. Perform the test before opening the refrigeration system.

It is beneficial to have a correctly operating unit running beside the unit being serviced to compare behaviour.

Note: These diagnostic procedures are indicative only.

Refrigeration system diagnostic test (perform in suitable workshop)

1. Isolate the chiller from the power supply and remove the refrigeration unit, and remove the unit cover.
2. Place unit on bench and connect service probe to red plug on unit.
3. Connect the refrigeration unit to the power supply and allow to run for approximately 10 minutes until the evaporator temperature stabilises.
4. Refer to the table below to determine if the system charge is correct.
   A system with the correct refrigerant charge will frost back towards the compressor. The point where the frost stops is affected by the ambient temperature.
   The table below details the frost stop point on a correctly charged system running on the bench.

Ambient	50% charged	75% charged	100% charged
10°C	Cold with light sweat	Cold with light sweat	Frosting to compressor
20°C	Cold with light sweat	Sweating 50mm from compressor	Frosting to compressor
30°C	Dry	Dry	Frosting 20mm from compressor
40°C	Dry	Dry	Sweating 50mm from compressor

5. If the suction pipe frosts to the appropriate frost stop point, the charge is likely correct. If the frost does not go back to the point shown there may be a capillary blockage or compressor fault.
6. Use the table below to determine whether the system is short of refrigerant or a blocked capillary.

Diagnosis	Frost back (after 10 mins)
Blocked capillary	None
Normal operation	Refer to table above

7. After fault has been diagnosed and repaired, reassemble the refrigeration system and test run.

Electronic Controller

Controller Location

The electronic controller is located within the electronic controller box assembly.

To access the controller

1. Disconnect the chiller from the power supply.
2. Open the electronic controller box assembly by undoing the two fixing screws at the rear of the assembly. **Note:** On one door cabinets it is necessary to move the unit back to access the controller box assembly.



QC Terminals

The terminals at the back of the controller are locking QC terminals, which cannot be pulled off without pressing in the locking tabs.

Use needle nose pliers to unlock and gently remove the terminals.

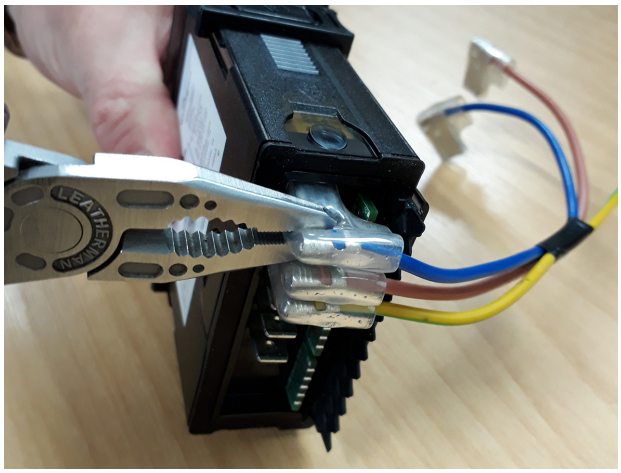

Replacing the Controller

Follow the steps below to replace the controller.

Note: Replacement spare part electronic controllers are not supplied with the parameter set loaded. This must be loaded via the SCS Connect Field app after replacing the controller. Internet access may be required.

To replace the controller

1. Disconnect the chiller from the power supply and access the electronic controller (see “Controller Location” on page 49).
2. Remove the cable clamps and disconnect the terminals from the back of the controller.
3. Fit the new replacement controller, and connect up the terminals at the back of the controller. Fit low voltage terminals before high voltage terminals.

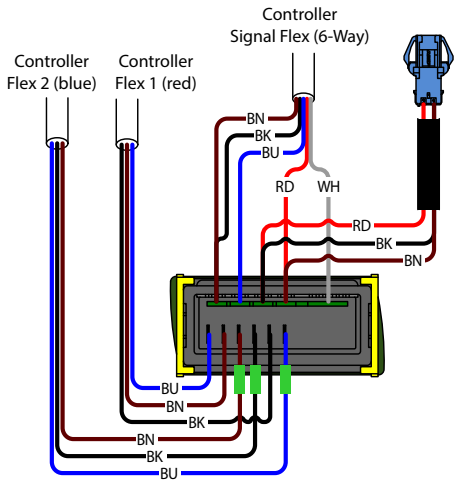

4. Reassemble the controller box and cabinet, perform electrical safety test as required, and reconnect to the power supply.
5. Use a mobile device to connect to the controller with the SCS Connect Field app (see “SCS Connect Field App and Track App” on page 11).
6. Navigate to the LOAD PARAMETER FILE menu.
7. Select the appropriate parameter file from LOCAL. If not available in LOCAL, search for the parameter file in SERVER (internet access required), and download to LOCAL.
8. Confirm correct file and WRITE TO SCS.
9. After WRITE TO SCS is complete, select MENU DISCONNECT to save parameter set on SCS.
10. Power cycle the controller and check that correct parameter set has been applied
11. Power cycle the controller and check that correct parameter set has been applied
12. Set up controller and cabinet links as required:

    Corporate
    The service tech must link to the controller to the cabinet serial number in the SCS Connect Field app.

    General Market
    The owner must set up SKOPE-connect (if in use).

Door Switch

The chiller is fitted with a door switch above each door, which tells the electronic controller when a door is opened. A small magnet in the door frame activates the switch. A cable connects the switch to the electronic controller via an inline connector on top of the cabinet.

To remove the door switch

1. Disconnect the chiller from the power supply.
2. Disconnect the door switch cable plug from the inline connector on top of the cabinet.
3. Unscrew the two fixing screws from the door switch and remove.
4. Fit the replacement door switch and connect via the inline connector.

Control Probe

The control probe is cable tied to a bracket on the evaporator fan motor bracket (see image below).

To replace the control probe

1. Remove the evaporator fan assembly (see page 46).
2. Detach the probe from the evaporator fan shroud bracket and trace the probe cable back to the unit electrics box and unplug (see page 42).
3. Following the same path as the original probe, fit the new probe with cable ties as necessary. Ensure the probe cable is securely plugged into the rear of the unit junction box, and that it is cable tied to the evaporator fan shroud bracket, with the probe bent away from the fan bracket at a 45° angle.

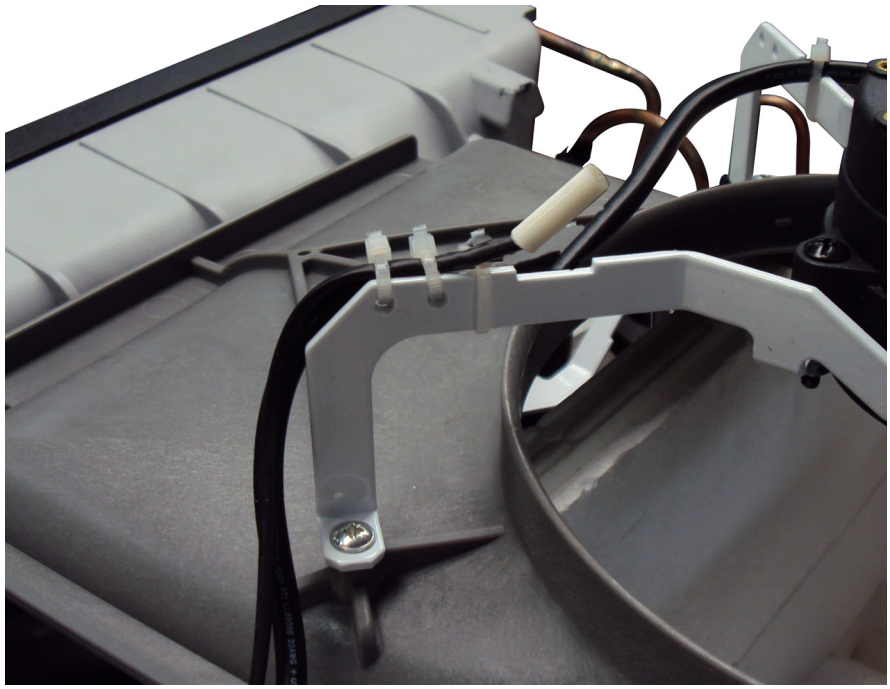

Evaporator Probe

The evaporator probe is located within the evaporator coil. It controls the refrigeration system defrost initiation and termination.

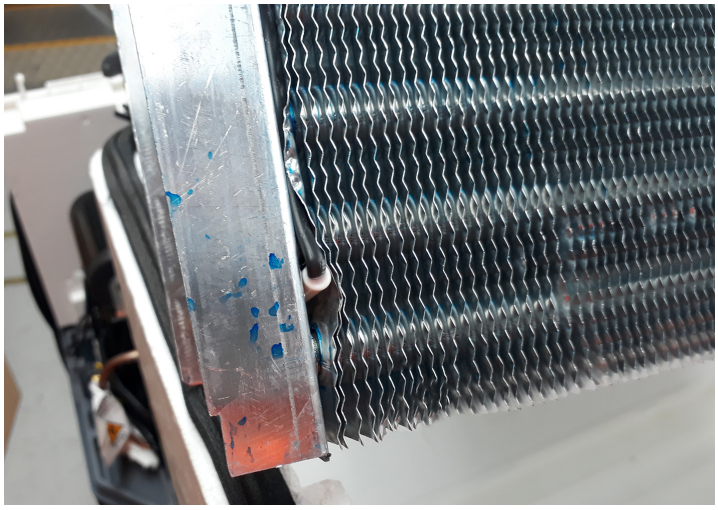

To replace the evaporator probe

1. Disconnect the chiller from the power supply and remove the refrigeration unit (see page 41).
2. Remove the unit cover (see page 44).
3. Remove the evaporator fan assembly (see page 46).
4. Remove both pieces of putty securing the pipes and cables on the evaporator tub perimeter.

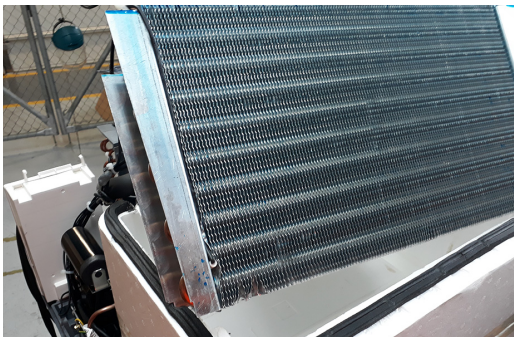

5. Carefully lift the coil up and out of the evaporator tub. Take care of pipes and cables when lifting out.
6. Detach the probe from the side of the evaporator coil, and trace the probe cable back to the unit electrics box, cutting cable ties as required, and unplug (see page 42).
7. Following the same path as the original probe, run the new probe to the evaporator coil and secure with cable ties. Locate the probe in the same location as the original probe (against the side of the coil above the bottom pipe as pictured above). Plug the probe cable securely into the electrics box.
8. Reassemble the unit and test for correct operation.

Condenser Probe

The condenser probe is located on the side of the condenser coil. It monitors condenser temperature.

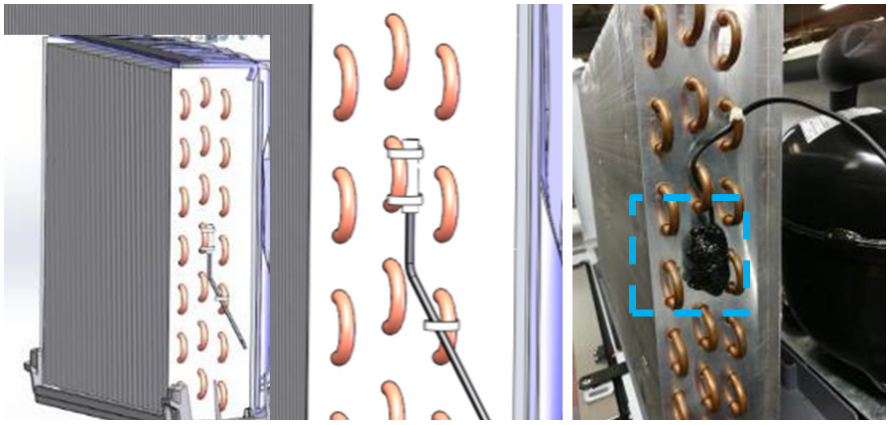

To replace the condenser probe

1. Disconnect the chiller from the power supply and remove the refrigeration unit (see page 41).
2. Remove the unit cover (see page 44).
3. Detach the probe from the side of the condenser coil, and trace the probe cable back to the unit electrics box, cutting cable ties as required, and unplug (see page 42).
4. Following the same path as the original probe, run the new probe to the condenser coil and secure with cable ties. Locate the probe in the same location as the original probe (as pictured above) and insulate with cork tape. Plug the probe cable securely into the electrics box.
5. Reassemble the unit and test for correct operation.

Ambient Probe

The ambient probe is located above the door. It monitors the temperature around the refrigeration unit. **Note:** The ambient probe is wired in series with the door switch.

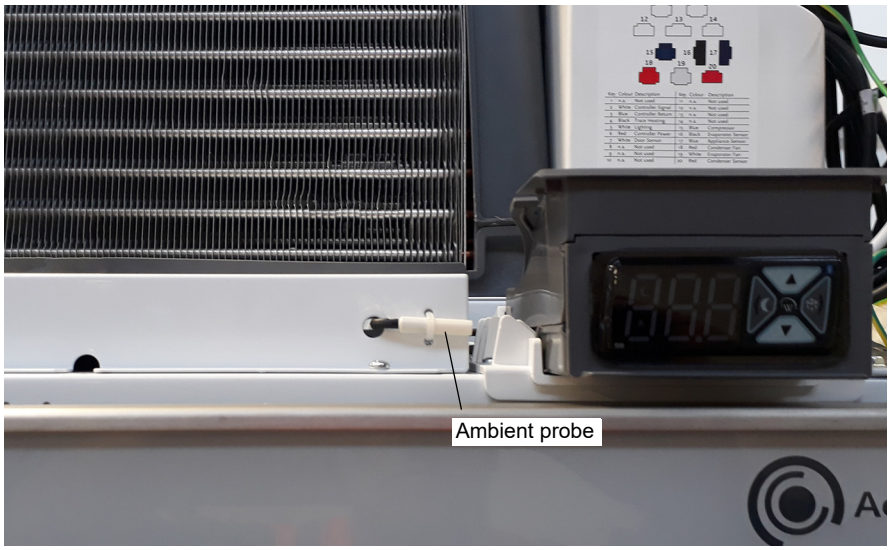

To replace the ambient probe

1. Disconnect the chiller from the power supply (see page 30).
2. Remove the sign panel.
3. Detach the refrigeration unit and carefully push back or remove to allow access to the cabinet electrics cover.

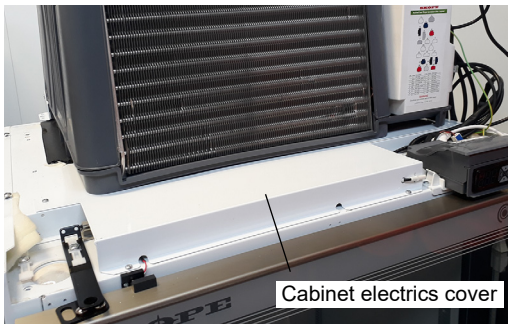

4. Unscrew the cabinet electrics cover.
5. Detach the probe from the electrics cover, and trace the probe cable back to the connector, cutting cable ties as required, and unplug.
6. Fit the new probe and secure with cable ties. Ensure the probe is located in the same location as the original probe (as pictured above).
7. Reassemble the unit and test for correct operation.

Cleaning

Cabinet

Wipe the inside and outside of the cabinet with a damp cloth, taking care to keep moisture away from electrical parts. As with any maintenance, ensure the chiller is unplugged from the power supply before cleaning.

Condenser Coil

To ensure trouble-free performance, the condenser coil must be kept clean. We strongly urge monthly cleaning with a soft brush to remove dust and fluff. A more thorough cleaning is required by qualified service personnel every six months. The condenser coil **must** be kept clean for efficient and reliable operation.

WARNING

Unplug the chiller from the power supply before cleaning the condenser coil.

To clean the condenser coil and optional condenser filter

1. Isolate the chiller from the power supply.

2. Remove the front panel from the top of the cabinet by swinging it out and off. Lit sign front panels will also need to be unplugged.

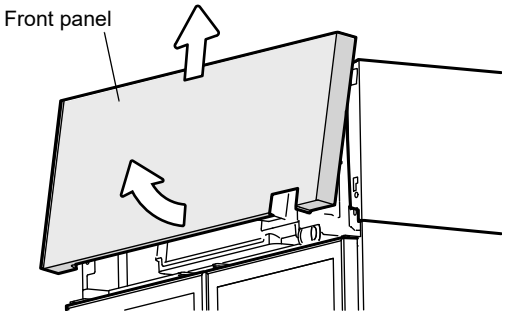

3. Brush the condenser coil with a soft brush to remove any dust and fluff.

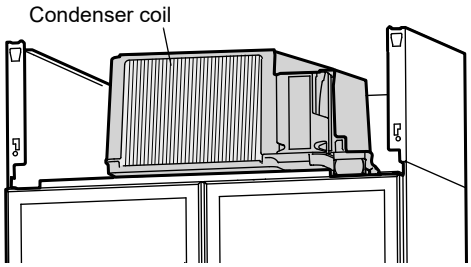

4. Refit the sign panel and reconnect to the power supply.

   Important

   When refitting, ensure the tabs on the back of the sign are located in the notches on top of the cabinet, and that the sign is pushed fully in and secure.

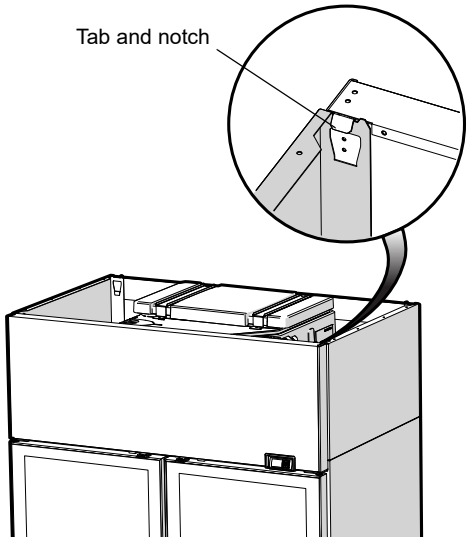

8 Troubleshooting

Electronic Controller

Alarms signal unexpected operational changes in the cooler. When an alarm is activated, use the electronic controller app to assist with fault diagnosis and service as necessary. See page 11 for information.

Cabinet and Refrigeration Unit

Diagnostic Table

For problems with the cabinet and refrigeration unit use the following table.

Problem	Possible Cause	Repair
• Cabinet not operating • No controller display	• Loss of power supply	• Check mains power supply.
	• Loose plug in electrics box	• Check all plugs in electrics box are connected correctly.
• Sign and/or Interior lights not on.	• Electronic controller is in 'Night' mode.	• Switch the light on while keeping the chiller in night mode by pressing the light button on the electronic controller faceplate. • Change the chiller into 'day' mode by pressing and holding the Day-Night button on the electronic controller faceplate, or hold the door open for ten seconds.
	• Light switched off.	• Switch light on via button on the electronic controller faceplate.
	• Electronic controller displays alarm indicating a refrigeration system error.	• Diagnose and repair. If system fault found, return to SKOPE.
	• Failed LED light.	• Service light.
• Excess noise vibration	• Refrigeration pipes transferring vibration into unit	• Re-align pipes.
• Frozen evaporator coil	• Set-point is too cold	• Check and raise.
	• Evaporator probe fault.	• Check and replace evaporator probe.
	• Controller fault	• Replace controller.
	• Short of refrigerant	• Perform refrigeration system diagnostics (see page 48) and service as required.

Continued over page

• Power consumption is higher than expected	• Unit operating too hot	• Clean the condenser. • Ensure the cabinet has good ventilation around the refrigeration unit. • Ensure the cabinet is within the maximum operating temperature.
	• Cabinet door is opened excessively	• Ensure door is closed more often.
	• Product too cold	• Raise set point
• Product is too warm.	• Frequent door opening.	• Limit door openings.
	• Recently loaded	• Allow time for the product to cool down.
	• Door not closing properly.	• Check and clean door gasket.
	• Refrigeration unit operating too hot. • Excessive door opening or refrigeration heat load.	• Ensure the cabinet has good ventilation around the refrigeration unit. • Ensure the cabinet is within the maximum operating conditions.
	• Set point is to high	• Lower set point.
• Moisture build up on door or exterior.	• High humidity.	• Check ambient operating temperature and reposition chiller if necessary.
	• Frequent door opening.	• Limit door openings.
	• Door not closing properly.	• Check and clean door gasket.
• Chiller door does not shut properly.	• Chiller is on an uneven surface.	• Level the chiller.
	• Door is obstructed.	• Check shelves and product.
• Warm cabinet temperatures • Compressor operating for long periods (more than 1 hour)	• Blocked condenser	• Clean the condenser.
	• Poor ventilation around refrigeration unit	• Ensure the cabinet has good ventilation around the refrigeration unit. • Ensure the cabinet is within the maximum operating temperature.

On-site work procedure

If a customer reports a 'not cooling' fault, and it has been established that the cabinet is not cooling, follow the procedure below when making the service visit.

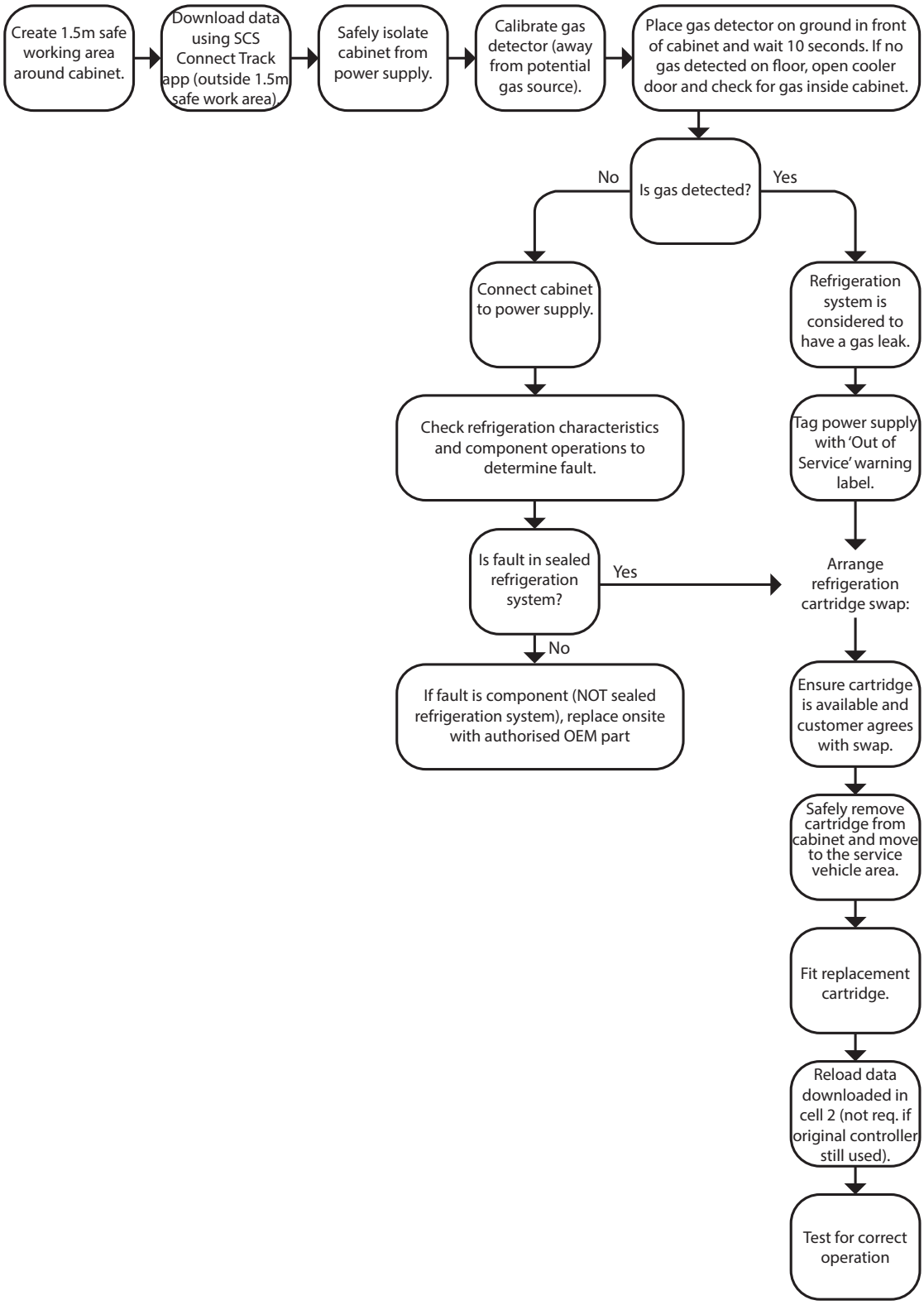

On-site work procedure (continued)

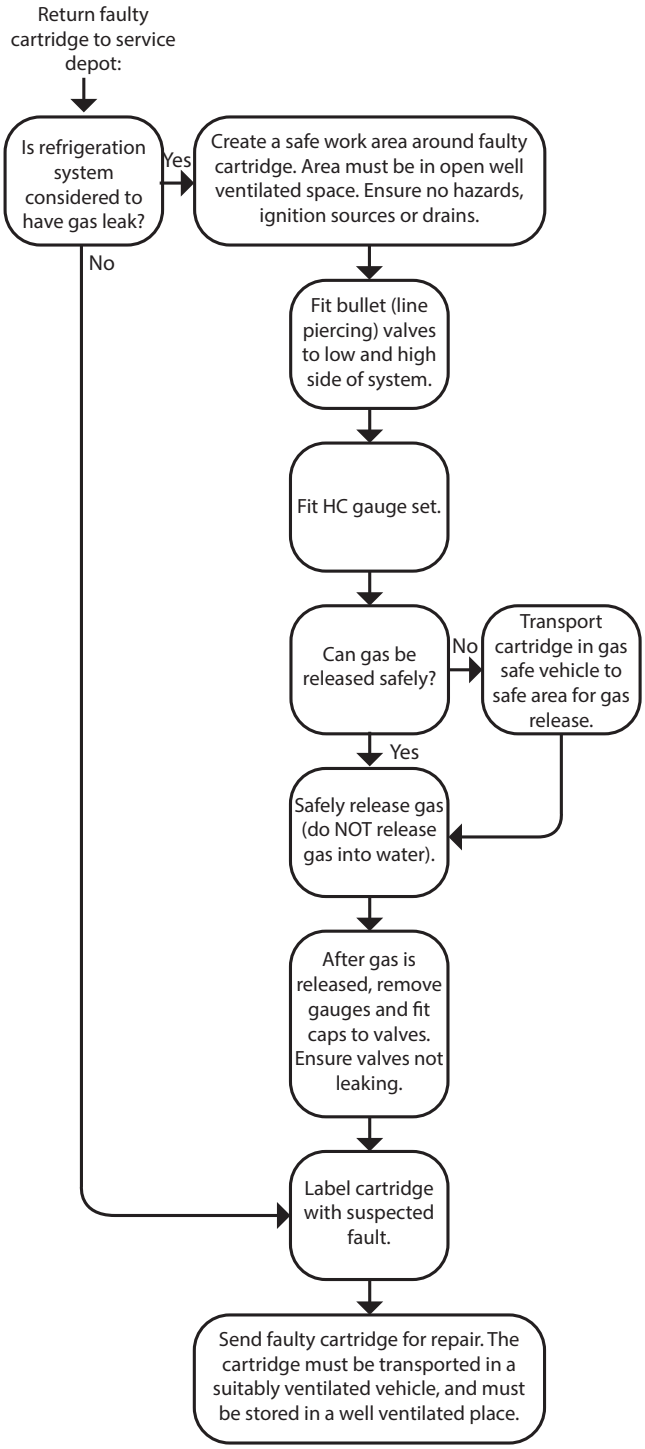

SKOPE Contacts

SKOPE Industries Limited

A.B.N. 73 374 418 306
AU: 1800 121 535
NZ: 0800 947 5673
skope@skope.com
www.skope.com