Operating instructions

Combined fridge-freezer

GB

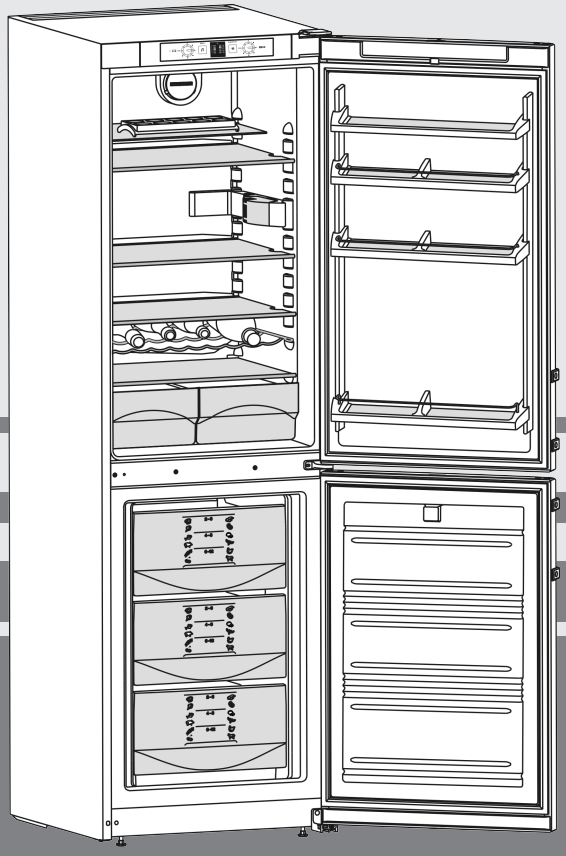

090913 **7081881 - 02**

CN(sl)3033 ... 3

LIEBHERR

Contents

1	**Appliance at a glance**	**2**
1.1	Overview of the appliance and equipment	2
1.2	Range of appliance use	2
1.3	Conformity	3
1.4	External dimensions of the appliance	3
1.5	Saving energy	3
2	**General safety information**	**3**
3	**Controls and displays**	**4**
3.1	Operating and control elements	4
3.2	Temperature display	4
4	**Putting into operation**	**4**
4.1	Transporting the appliance	4
4.2	Installing the appliance	4
4.3	Changing the door stop	5
4.4	Insertion into a row of kitchen units	6
4.5	Disposing of packaging	6
4.6	Connecting the appliance	7
4.7	Switching on the appliance	7
5	**Control**	**7**
5.1	Door alarm	7
5.3	Refrigerator compartment	7
5.4	Freezer compartment	8
6	**Maintenance**	**10**
6.1	Defrosting with NoFrost	10
6.2	Cleaning the appliance	10
6.3	Replacing the interior light	10
6.4	Customer service	10
7	**Malfunction**	**11**
8	**Decommissioning**	**11**
8.1	Switching off the appliance	11
8.2	Taking the appliance out of service	12
9	**Disposing of the appliance**	**12**

The manufacturer works constantly on the further development of all the types and models. Therefore please understand that we have to reserve the right to make design, equipment and technical modifications.

To get to know all the benefits of your new appliance, please read the information contained in these instructions carefully.

The instructions apply to several models. Differences may occur. Text relating only to specific appliances is marked with an asterisk (*).

Instructions for action are marked with a ▶, the results of action are marked with a ▷.

1 Appliance at a glance

1.1 Overview of the appliance and equipment

Note

▶ Place food inside the appliance as shown in the diagram. This allows the appliance to save energy during operation.

▶ Shelves, drawers and baskets are arranged for optimum energy efficiency on delivery.

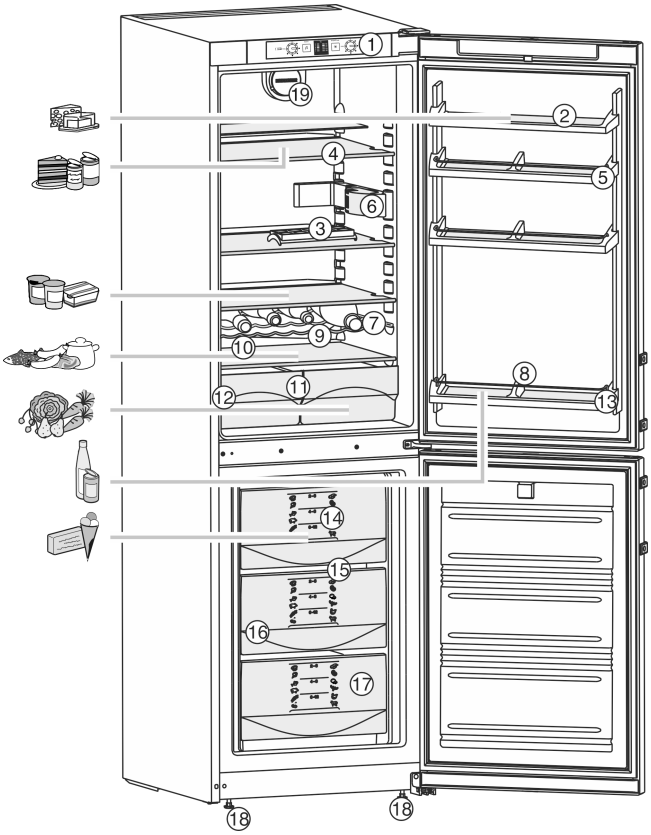

Fig. 1

(1) Operating controls
(2) Butter shelf
(3) Egg tray
(4) Shelves, adjustable
(5) Door rack, adjustable
(6) Interior light
(7) Bottle rack
(8) Adjustable bottle and jar shelf
(9) Defrost water drain
(10) Coldest area
(11) Vegetable bins
(12) Type plate
(13) Bottle shelf
(14) InfoSystem
(15) VarioSpace
(16) Freezer drawer
(17) Ice cube tray
(18) Adjustable feet at the front, castors for transport at the rear
(19) Fan

1.2 Range of appliance use

The appliance is suitable solely for cooling food in a domestic environment or similar. This includes use in, for example

- in staff kitchenettes, bed and breakfast establishments,
- by guests in country homes, hotels, motels and other forms of accommodation,
- in catering and similar services in the wholesale trade

Use the appliance solely as is customary within a domestic environment. All other types of use are inadmissible. The appliance is not suitable for storing and cooling medicines, blood plasma, laboratory preparations or similar substances and products covered by the 2007/47/EC Medical Devices Directive. Misuse of the appliance can result in the stored products suffering harm or perishing. Furthermore,

the appliance is not suitable for operation in potentially explosive atmospheres.

The appliance is set to operate within specific ambient temperature limits according to its climate rating. The correct climate rating for your appliance is indicated on the type plate.

Note

▶ Compliance with the ambient temperatures indicated is required, otherwise the cooling performance is reduced.

Climate rating	for ambient temperatures of
SN	10 °C to 32 °C
N	16 °C to 32 °C
ST	16 °C to 38 °C
T	16 °C to 43 °C

1.3 Conformity

The refrigerant circuit is tested for leakage. The appliance complies with the relevant safety regulations and EC Directives 2006/95/EC, 2004/108/EC, 2009/125/EC and 2010/30/EU.

Note for test institutions:

Tests are to be carried out according to the applicable standards and guidelines.
Preparation and testing of the appliances must be carried out taking the **manufacturer's loading plans** and the **notes in the operating manual** into account.

1.4 External dimensions of the appliance

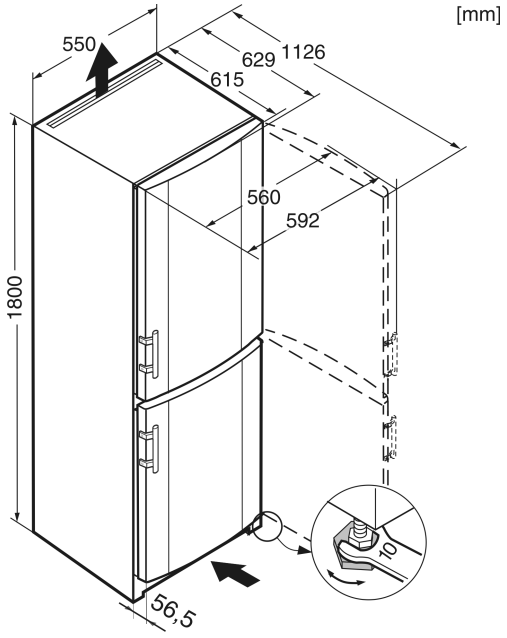

Fig. 2

1.5 Saving energy

- Always ensure good ventilation. Do not cover ventilation openings or grille.
- Always keep fan louvres clear.
- Do not place appliance in areas of direct sunlight or next to a stove, heater or similar object.
- The energy consumption depends on the installation conditions, e.g. the ambient temperature (see 1.2) .
- Keep the time the appliance is open to a minimum.
- The lower the temperature setting, the higher the power consumption.
- Store food logically. (see Appliance at a glance).
- Ensure that all food is well packed and covered for storage. This will prevent frost from forming.
- Remove food as needed in order that it does not warm too much.
- First cool warm food to room temperature before storing it .
- Defrost frozen food in the refrigerator.
- Empty and switch off refrigerating unit for longer vacation periods.

Accumulated dust increases the energy consumption:

- Once a year, dust the refrigerating unit together with the metal grille of the heat exchanger at the back of the appliance.

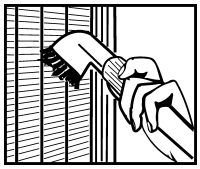

2 General safety information

Danger for the user:

- This appliance can be used by children of 8 years old and over, and also by persons with restricted physical, sensory or mental capacity or lack of experience and knowledge, if they are supervised or have been instructed on safe use of the appliance and understand the resulting risks. Children must not be allowed to play with the appliance. Cleaning and user maintenance must not be carried out by children without supervision.
- When disconnecting the appliance from the supply, always take hold of the plug. Do not pull the cable.
- In the event of a fault pull out the mains plug or deactivate the fuse.
- Do not damage the mains power cable. Do not operate the appliance with a defective mains power cable.
- Have any repairs to or intervention in the appliance, and any change of the mains power cable, carried out by the customer service only or by other specialised personnel trained for the purpose.
- Only assemble, connect and dispose of the appliance according to the instructions.
- Please keep these instructions in a safe place and pass them on to any subsequent owners.
- Special-purpose lamps (incandescent lamps, LEDs, fluorescent tubes) in the appliance serve to illuminate the appliance interior and are not suited for room illumination.

Fire hazard:

- The refrigerant R 600a is environmentally friendly but flammable. Escaping refrigerant may ignite.
  - Do not damage the refrigerant circuit pipes.
  - Do not allow naked flames or ignition sources to enter the appliance.
  - Do not use any electrical appliances in the interior (e.g. steam cleaners, heaters, ice cream maker etc.).
  - If refrigerant escapes: remove any naked flames or sources of ignition from the leakage area. Ventilate the room well. Notify the after-sales service.
- Do not store explosives or sprays using combustible propellants such as butane, propane, pentane, etc. in the appliance. To identify these spray cans, look for the list of contents printed on the can, or a flame symbol. Gases possibly escaping may ignite due to electrical components.
- Keep burning candles, lamps and other items with naked flames away from the appliance so that they do not set the appliance on fire.
- Please be sure to store alcoholic drinks or other packaging containing alcohol in tightly closed containers. Any alcohol that leaks out may be ignited by electrical components.

Danger of tipping and falling:

- Do not misuse the plinth, drawers, doors etc. as a step or for support. This applies particularly to children.

Danger of food poisoning:

- Do not consume food which has been stored too long.

Danger of frostbite, numbness and pain:

- Avoid lasting skin contact with cold surfaces or refrigerated/frozen food or take protective steps, e.g. wear gloves. Do not consume ice cream, water ice or ice cubes immediately and do not consume them too cold.

Danger of injury and damage:

- Hot steam can lead to injury. Do not use electrical heating or steam cleaning equipment, open flames or defrosting sprays to defrost.
- Do not use sharp implements to remove the ice.

Please observe the specific information in the other sections:

⚠	DANGER	identifies a situation involving direct danger which, if not obviated, may result in death or severe bodily injury.
⚠	WARNING	identifies a dangerous situation which, if not obviated, may result in death or severe bodily injury.
⚠	CAUTION	identifies a dangerous situation which, if not obviated, may result in minor or medium bodily injury.
	NOTICE	identifies a dangerous situation which, if not obviated, may result in damage to property.
	Note	identifies useful information and tips.

3 Controls and displays

3.1 Operating and control elements

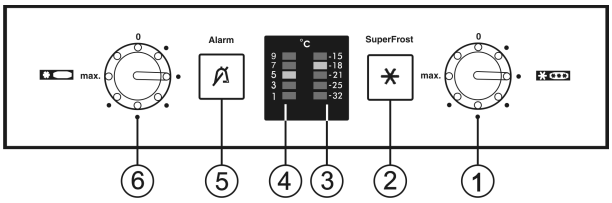

Fig. 3

(1) Temperature controller, freezer section
(2) SuperFrost button
(3) Temperature display, freezer section
(4) Temperature display, fridge section
(5) Alarm button
(6) Temperature controller, fridge section

3.2 Temperature display

The following are displayed in normal operation:

- the set cooling temperature

The temperature display flashes:

- the temperature setting is being changed

4 Putting into operation

4.1 Transporting the appliance

CAUTION
Risk of injury and danger of damage as a result of incorrect transport!

▶ Transport the appliance in a packed condition.
▶ Transport the appliance upright.
▶ Do not transport the appliance without assistance.

4.2 Installing the appliance

WARNING
Fire hazard due to dampness!
If live parts or the mains lead become damp this may cause short circuits.

▶ The appliance is designed for use in enclosed areas. Do not operate the appliance outdoors or in areas where it is exposed to splash water or damp conditions.

WARNING
Risk of fire due to short circuit!
If the mains cable/connector of the appliance or of another appliance touch the rear of the appliance, the mains cable/ connector may be damaged by the appliance vibrations, leading to a short circuit.
▶ Stand the appliance so that it is not touched by connectors or main cables.
▶ Do not plug the appliance or any others into sockets located near the rear of the appliance.

WARNING
Fire hazard due to refrigerant!
The refrigerant R 600a is environmentally friendly but flammable. Escaping refrigerant may ignite.
▶ Do not damage the piping of the refrigeration circuit.

WARNING
Fire hazard and danger of damage!
▶ Do not place appliances emitting heat e.g. microwaves, toasters etc. on the appliance!

WARNING
Blocked ventilation openings pose a risk of fire and damage!
▶ Always keep the ventilation openings clear. Always ensure that the appliance is properly ventilated!

NOTICE
Risk of damage due to condensate!
▶ Do not install the appliance directly alongside a further refrigerator/freezer.

❑ In the event that the appliance is damaged, contact the supplier immediately before connecting to the mains.
❑ The floor at the site must be flat and level.
❑ Do not install the appliance in a location where it is exposed to direct radiation of the sun, next to a cooker, heater and similar.
❑ Always stand the appliance with its back directly to the wall.
❑ The appliance may be moved only when it is empty.
❑ Do not install the appliance without assistance.
❑ Standard EN 378 specifies that the room in which you install your appliance must have a volume of 1 m^2 per 8 g of R 600a refrigerant used in the appliance. If the room in which the appliance is installed is too small, a flammable gas-air mixture may form in the event of a leakage in the refrigeration circuit. The quantity of refrigerant used in your appliance is indicated on the type plate on the inside of the appliance.
▶ Detach the connecting cable from the rear of the appliance, removing the cable holder at the same time because otherwise there will be vibratory noise!

NOTICE
The **stainless steel doors** are finished with a high quality surface coating and must not be treated with the enclosed care product,

as otherwise the surface coating will be damaged.
▶ Please only use a soft clean cloth to wipe the **coated door surfaces**.
▶ Only use a stainless steel care product on the **stainless steel side walls**, applying it evenly in the direction of polishing. Subsequent cleaning will then be easier.
▶ Use only a soft clean cloth to wipe **side walls** and **door surfaces** with a paint finish.

▶ Remove the protective film from the decorative trims.
▶ Remove all transit supports.
▶ Dispose of packaging material (see 4.5) .
▶ Align the appliance so that it stands firmly and on a level by applying the accompanying spanner to the adjustable-height feet (A) and using a spirit level.

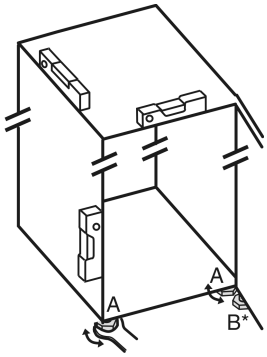

Note
▶ Clean the appliance (see 6.2) .

If the appliance is installed in a very damp environment, condensate may form on the outside of the appliance.
▶ Always see to good ventilation at the installation site.

4.3 Changing the door stop

You can change over the door hinges if necessary.

Make sure that the following tools are to hand:
❑ Torx® 25
❑ Torx® 20
❑ Torx® 15
❑ Screwdriver
❑ Supplied open-ended wrench
❑ If necessary, a second person to assist with installation.

CAUTION
Risk of injury if the door tips!
▶ Take good hold of the door.
▶ Set down the door carefully.

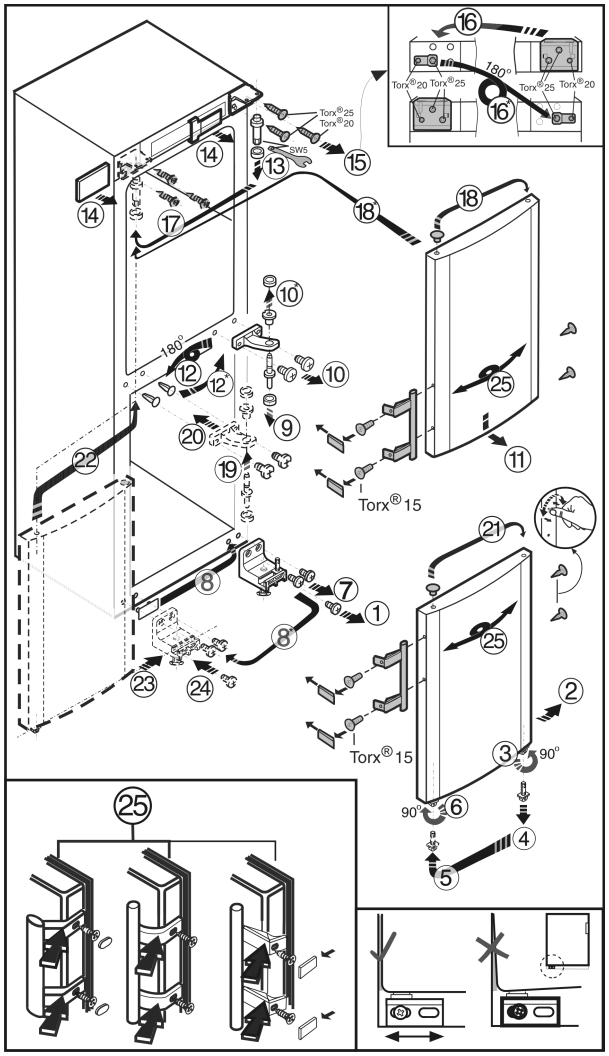

Fig. 4

▶ Follow the order of the positions.

4.4 Insertion into a row of kitchen units

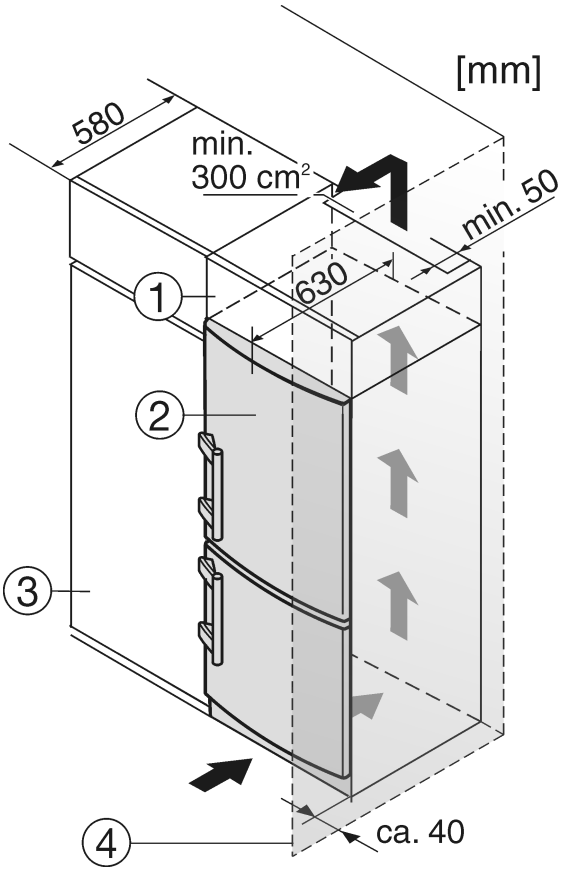

Fig. 5

(1) Stack cabinet
(2) Appliance
(3) Kitchen cabinet
(4) Wall

The appliance can be inserted into a row of kitchen units. To match the appliance *Fig. 5 (2)* to the height of the row of units, a suitable stack cabinet *Fig. 5 (1)* can be fitted above the appliance.

When inserting the appliance into a row of kitchen units (max. depth 580 mm), the appliance can be installed directly next to the kitchen unit *Fig. 5 (3)*. The appliance door projects relative to the front of the kitchen unit by 34 mm at the side and by 50 mm in the middle of the appliance. It can be opened and closed perfectly as a result.

Important for the ventilation:

- At the back of the stack cabinet there has to be a ventilation duct of at least 50 mm depth throughout the width of the stack cabinet.
- The ventilation space under the ceiling has to be at least 300 cm².
- the larger the ventilation space, the more energy-saving the appliance is in operation.

If the appliance is installed with the hinges next to a wall *Fig. 5 (4)*, the distance between appliance and wall has to be at least 40 mm. This corresponds to the projection of the handle when the door is open.

4.5 Disposing of packaging

WARNING
Danger of suffocation due to packing material and plastic film!
▶ Do not allow children to play with packing material.

The packaging is made of recyclable materials:

- corrugated board/cardboard
- expanded polystyrene parts

- polythene bags and sheets
- polypropylene straps
- nailed wooden frame with polyethylene panel*

▶ Take the packaging material to an official collecting point.

4.6 Connecting the appliance

NOTICE
Risk of damage to the electronic control system!
▶ Do not use stand-alone inverters (conversion of d.c. to a.c./ three-phase) or energy saving plugs.

WARNING
Fire and overheating hazard!
▶ Do not use extension cables or multiple socket outlets.

The type of current (alternating current) and voltage at the installation site have to conform with the data on the type plate (see Appliance at a glance).

The socket must be properly earthed and fused. The tripping current for the fuse must be between 10 A and 16 A.

The socket must be easily accessible so that the appliance can be quickly disconnected from the supply in an emergency. It must be outside the area of the rear of the appliance.

▶ Check the electrical connection.
▶ Plug in the power plug.



4.7 Switching on the appliance

Put the appliance into operation about 4 hours before first loading food to be frozen.

Do not load food to be frozen before the alarm button goes out.

▶ Turn the temperature control of the freezer compartment *Fig. 3 (1)* to the right with a coin.
▶ Turn the temperature control of the refrigerator compartment *Fig. 3 (6)* to the right with a coin.
▷ The temperature displays light up.
▷ The interior light goes on.
▷ The alarm button *Fig. 3 (5)* lights up.

5 Control

5.1 Door alarm

For refrigerator and freezer compartment
If the door is open for longer than 60 seconds, the audible warning will sound.

The audible alarm is automatically silenced when the door is closed.



5.1.1 Muting the door alarm

The audible alarm can be muted when the door is open. The sound switch-off function is active as long as the door is left open.

▶ Press alarm button *Fig. 3 (5)*.
▷ The door alarm is silenced.

5.2.1 Temperature alarm

The audible alarm sounds if the freezer temperature is not cold enough.

The alarm button flashes at the same time.



The cause of the temperature being too high may be:

- warm fresh food was placed inside
- too much warm ambient air flowed in when rearranging and removing food
- power failure for some time
- the appliance is faulty

The audible alarm is automatically silenced, the alarm button *Fig. 3 (5)* goes out and the temperature display stops flashing when the temperature is sufficiently cold again.

If the alarm status persists: (see Malfunction).

Note
Food may be spoilt if the temperature is not cold enough.
▶ Check the quality of the food. Do not consume spoiled food.

5.2.1 Muting the temperature alarm

The audible alarm can be muted. When the temperature is sufficiently cold again, the alarm function is active again.

▶ Press alarm button *Fig. 3 (5)*.
▷ The audible alarm is silenced.

5.3 Refrigerator compartment

The natural circulation of air in the refrigerator compartment results in zones differing in temperature. It is coldest directly above the vegetable drawers and at the rear wall. It is warmest at the top front of the compartment and in the door.

5.3.1 Food refrigeration

Note
The energy consumption increases and the cooling performance decreases if the ventilation is inadequate.
▶ Always keep the air slits of the fan free.

▶ Store perishable food such as ready-to-serve dishes, meat products and sausages in the coldest zone. Place butter and preserves in the upper area and in the door (see Appliance at a glance).
▶ Use recyclable plastic, metal, aluminium and glass containers and cling film for wrapping.
▶ Always store liquids and food which is subject to odour or taste transfer in closed containers or cover them.
▶ Foods which give off a large amount of ethylene gas and delicate foods, such as fruit, vegetables, salad, should always be stored separately or wrapped so as not to reduce the storage life; e.g. do not store tomatoes together with kiwis or cabbage.
▶ Do not store food too close together to enable good air circulation.
▶ To safeguard bottles from tipping over: move the bottle holder.

5.3.2 Setting the temperature

The temperature can be set between the first point (warmest temperature, lowest refrigerating capacity) and max. (coldest temperature, highest refrigerating capacity).

The recommended temperature is 5 °C i.e. a medium control setting.

▶ Turn the temperature control of the refrigerator compartment *Fig. 3 (6)* with a coin until the temperature wanted flashes in the temperature display.

GB

The temperature can be set slightly colder within a temperature range, e.g. 5 °C to 7 °C, or between two points of the control.

▶ If required, slowly turn the temperature control further.

▷ The lit bar of the temperature range e.g. 5 °C to 7 °C flashes briefly. The temperature within the temperature range was set colder.

The temperature is dependent on the following factors:

- the frequency of door opening
- the room temperature of the installation site
- the type, temperature and quantity of frozen food

▶ In case of need, adjust the temperature with the control.

5.3.3 Fan

With the fan you can rapidly cool large quantities of fresh food or achieve a relatively even distribution of temperature across all the storage levels.



The forced-air cooling is to be recommended:

- at high room temperature (above33 °C)
- at high humidity

The forced-air cooling uses slightly more energy. To save energy, the fan switches off automatically when the door is open.

Using the fan

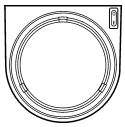

▶ To switch on: set the fan switch to I.

▷ The fan is switched on.

▶ To switch off: set the fan switch to **0**.

▷ The fan is switched off.

5.3.4 Shelves

Relocating the shelves

The shelves have stops preventing them from being unintentionally pulled out.

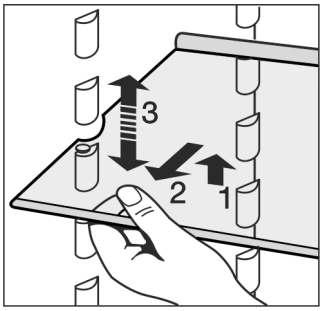

▶ Lift the shelf and draw it out forwards.

▶ Insert shelf with the raised edge pointing upwards at the back.

▷ The food does not freeze onto the rear wall.

Dismantling shelves

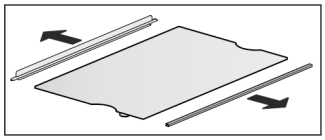

▶ The shelves can be dismantled for cleaning.

5.3.5 Using the sectioned shelf

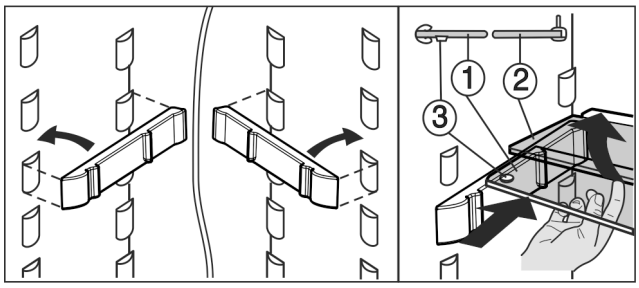

Fig. 6

▶ The glass shelf with stop face (2) has to be at the back.

5.3.6 Door racks

Moving the storage rack

▶ Remove storage rack according to illustration.

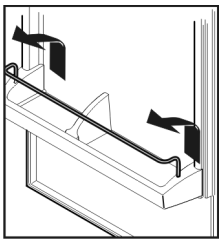

Dismantling door racks

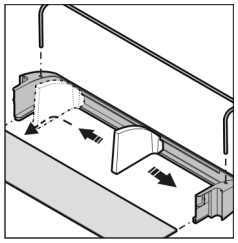

▶ The door racks can be dismantled for cleaning.

5.3.7 Removing the bottle holder

▶ Remove the bottle holder according to the illustration.

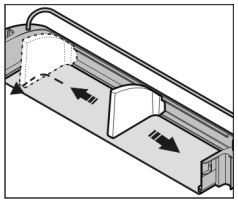

5.4 Freezer compartment

You can store frozen food, make ice cubes and freeze fresh food in the freezer compartment.

5.4.1 Freezing food

The rating plate indicates the maximum quantity of fresh food you can freeze within 24 hours (see Appliance at a glance) under “Freezing capacity ... kg/24h”.

The maximum load of frozen food for the drawers is 25 kg each and for the shelves 35 kg each.

CAUTION

Risk of injury due to broken glass!

Bottles and cans containing drinks may burst when being frozen. This applies particularly to sparkling drinks.

▶ Do not freeze bottles and cans containing drinks!

In order that the food is rapidly frozen through to the core, do not exceed the following quantities per pack:

- Fruit, vegetables up to 1 kg
- Meat up to 2.5 kg

▶ Pack the food in portions in freezer bags, reusable plastic, metal or aluminium containers.

5.4.2 Thawing food

- in the refrigerator compartment
- at room temperature
- in a microwave oven
- in a conventional or fan oven

▶ Remove only as much food as is required. Use thawed food as quickly as possible.

▶ Food once thawed should be re-frozen only in exceptional cases.

5.4.3 Setting the temperature

The temperature can be set between the first point (warmest temperature, lowest refrigerating capacity) and max. (coldest temperature, highest refrigerating capacity), the recommended temperature is-18 °C i.e. the 3rd point.

▶ Turn the temperature control of the freezer compartment *Fig. 3 (1)* with a coin until the temperature wanted lights up in the temperature display.

The temperature is dependent on the following factors:

the frequency of door opening
the room temperature of the installation site
the type, temperature and quantity of frozen food

▶ You may have to readjust the temperature, depending on the temperature wanted.

The temperature can be set slightly colder within a temperature range, e. g. –15 °C to –18 °C or between two control settings.

▶ If required, slowly turn the temperature control further.

▷ The lit bar of the temperature range, e. g. –18 °C flashes briefly. The temperature within the temperature range was set colder.

5.4.4 SuperFrost

With this function you can freeze fresh food quickly through to the core. The appliance operates with maximum refrigeration. The noise of the refrigeration unit may be temporarily louder as a result. ✱✱

The maximum amount of fresh food which can be frozen in 24 h is indicated on the type plate under “freezing capacity ... kg/ 24h”. This amount varies according to the model and climate rating.

You have to activate SuperFrost in good time, depending on how much fresh food is to be frozen: about 6 hours before placing the food inside in case of small amounts and about 24 hours in advance in case of the maximum amount of food to be frozen.

Wrap produce and spread it out as far as possible. Do not allow produce to be frozen to touch produce that is already frozen to prevent the latter thawing.

You do not have to activate SuperFrost in the following cases:

- when placing frozen food in the freezer
- when freezing up to approx. 2 kg fresh food daily

Freezing with SuperFrost

▶ Briefly press the SuperFrost button *Fig. 3 (2)*.

▷ The SuperFrost button shines.*

▷ The freezer temperature drops, the appliance operates with the maximum refrigerating capacity.

Note

▶ Pressing the SuperFrost button can cause the compressor to switch on up to 8 minutes later, thanks to the integrated switch-on delay. This delay increases the service life of the compressor.

In case of a small amount of food to be frozen:

▶ wait approx. 6 h.

▶ Place wrapped produce in the top drawers.

In case of the maximum amount of food to be frozen (see type plate):

▶ wait about 24 h.

▶ Remove top drawers and place produce directly on the top shelves.

▷ SuperFrost is automatically deactivated after about 65 h.

▷ The temperature range set for the normal mode shines in the temperature display.

▶ Place produce in the drawers and push the latter back in again.

▷ The appliance continues to operate in the energy-saving, normal mode.

5.4.5 Drawers

Note

The energy consumption increases and the cooling performance decreases if there is insufficient ventilation.

For appliances with NoFrost:

▶ Leave the bottom drawer in the appliance!

▶ Always keep the air slits of the fan free at the rear wall!

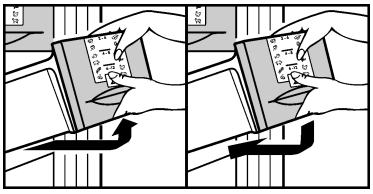

▶ To store frozen food directly on the shelves: pull the drawer forwards and lift it out.

5.4.6 Shelves

▶ To remove the shelf: lift up at the front and pull out.

▶ To put the shelf back: simply push in as far as it will go.

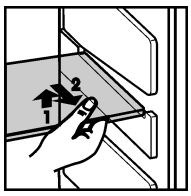

5.4.7 VarioSpace

Apart from being able to remove the drawers, you can also remove the shelves, creating space for large items of frozen food. Poultry, meat, large pieces of game and high bakery products can be frozen in one piece and prepared.

▶ The maximum load of frozen food for the drawers is 25 kg each and for the shelves 35 kg each.

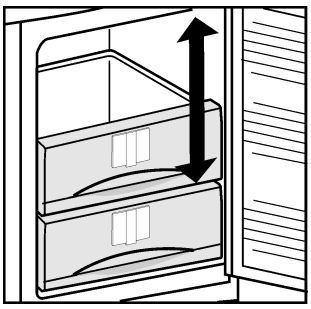

5.4.8 Information system

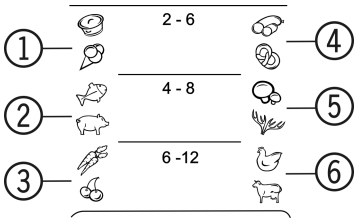

Fig. 7

(1) Ready-made meals, ice cream
(2) Pork, fish
(3) Fruit, vegetables
(4) Sausages, bread
(5) Game, mushrooms
(6) Poultry, beef/veal

The figures indicate the storage time in months for several types of frozen food in each case. Storage times given are guide times.

6 Maintenance

6.1 Defrosting with NoFrost

The NoFrost system automatically defrosts the appliance.

Refrigerator compartment:

The defrost water evaporates due to the compressor heat. Drops of water on the rear wall are perfectly normal.

▶ Regularly clean the drain opening to allow the water to flow away (see 6.2) .

Freezer compartment:

The moisture condenses on the evaporator, is periodically defrosted and evaporates.

▶ The appliance does not have to be manually defrosted.

6.2 Cleaning the appliance

WARNING
Risk of injury and damage as a result of hot steam!
Hot steam can lead to burns and can damage the surfaces.

▶ Do not use any steam cleaners!

NOTICE
Incorrect cleaning damages the appliance!

▶ Do not use cleaning agents in concentrated form.
▶ Do not use any scouring or abrasive sponges or steel wool.
▶ Please do not use any aggressive, scouring, sand-, chloride-, chemical- or acid-based cleaning agents.
▶ Do not use chemical solvents.
▶ Do not damage or remove the type plate on the inside of the appliance. It is important for the customer service.
▶ Do not pull off, bend or damage cables or other components.
▶ Do not allow any cleaning water to enter the drain channel, ventilation grille or electrical parts.
▶ Please use soft cleaning cloths and a universal pH-neutral cleaning agent.
▶ Please use cleaning and care products suitable for contact with foodstuffs in the appliance interior.

▶ **Empty appliance.**
▶ **Pull out the power plug.**



▶ Clean **plastic outer and inner surfaces** with lukewarm water and a little washing-up liquid.

NOTICE
The **stainless steel doors** are finished with a high quality surface coating and must not be treated with the enclosed care product,



as otherwise the surface coating will be damaged.

▶ Please only use a soft clean cloth to wipe the **coated door surfaces**. In the case of heavy soiling, use a little water or neutral cleaning agent. A micro-fibre cloth can be used optionally.
▶ When soiled, clean **stainless steel side walls** with a commercially available stainless steel cleaning agent. Then apply the enclosed stainless steel care product evenly in the direction of polishing.
▶ Use only a soft clean cloth to wipe **side walls** and **door surfaces** with a paint finish. In the case of heavy soiling, use a little water or neutral cleaning agent. A micro-fibre cloth can be used optionally.

▶ Clean **drain hole**: Remove deposits with a narrow instrument, e.g. a cotton bud.

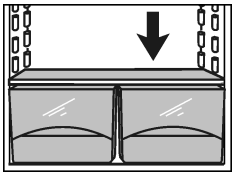

▶ Clean **items of equipment** by hand with lukewarm water and a little washing-up liquid.

After cleaning:

▶ Wipe dry the appliance and items of equipment.
▶ Connect the appliance and switch it on again.
▶ Switch on SuperFrost (see 5.4.4) .
When the temperature is sufficiently cold:
▶ Put the food back inside.

6.3 Replacing the interior light

Bulb data

❑ max. 25 W
❑ Bulb fitting: E14
❑ Current type and voltage must conform with the data on the type plate

▶ Switch off the appliance.
▶ Pull out the mains plug or switch off/unscrew the fuse.
▶ Take hold of the lamp cover at the top and bottom *Fig. 8 (1)*.
▶ Disengage the lamp cover at the back and detach it *Fig. 8 (2)*.
▶ Replace the bulb *Fig. 8 (3)*.

Apply slight pressure when turning the bulb to overcome the friction of the seal. Pay attention that the seal is seated properly in the lamp socket.

▶ Clip the back end of the cover in and clip the sides into place.

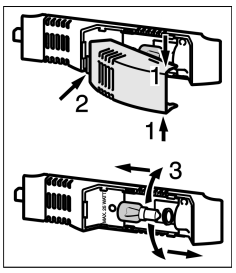

Fig. 8

6.4 Customer service

First check whether you can correct the fault yourself by reference to the list (see Malfunction). If this is not the case, please contact the customer service whose address is given in the enclosed customer service list.

WARNING
Risk of injury if repair work is not carried out professionally!
▶ Have any repairs and action - not expressly specified - on the appliance and mains cable carried out by service personnel only. (see Maintenance)

▶ Read the appliance designation *Fig. 9 (1)*, service No. *Fig. 9 (2)* and serial No. *Fig. 9 (3)* off the type plate located inside the appliance on the left-hand side.

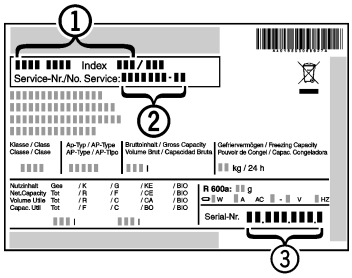

Fig. 9

▶ Notify the customer service, specifying the fault, appliance designation *Fig. 9 (1)*, service No. *Fig. 9 (2)* and serial No. *Fig. 9 (3)*.
▷ This will help us to provide you with a faster and more accurate service.
▶ Keep the appliance closed until the customer service arrives.
▷ The food will stay cool longer.
▶ Pull out the mains plug (not by pulling the connecting cable) or switch off the fuse.

7 Malfunction

Your appliance is designed and manufactured for a long life span and reliable operation. If a malfunction nonetheless occurs during operation, check whether it is due to a handling error. In this case you will have to be charged for the costs incurred, even during the warranty period. You may be able to rectify the following faults yourself:

Appliance does not work.
→ The appliance is not switched on.
▶ Switch on the appliance.
→ The power plug is not properly inserted in the wall socket.
▶ Check power plug.
→ The fuse of the wall socket is not in order.
▶ Check fuse.

The compressor runs for a long time.
→ The compressor switches to a low speed when little cold is needed. Although the running time is increased as a result, energy is saved.
▶ This is normal in energy-saving models.
→ SuperFrost is activated.
▶ The compressor runs for longer in order to rapidly cool the food. This is normal.

A LED on the bottom rear of the appliance (at the compressor) flashes regularly every 15 seconds*.
→ The inverter is equipped with a diagnostic LED.
▶ The flashing is normal.

Excessive noise.
→ Due to the various speed steps, speed-regulated* compressors can generate different running noises.
▶ The sound is normal.

A bubbling and gurgling noise.
→ This noise comes from the refrigerant flowing in the refrigeration circuit.
▶ The sound is normal.

A quiet clicking noise.
→ The noise is produced whenever the refrigeration unit (motor) automatically switches on or off.
▶ The sound is normal.

A hum. It is briefly a little louder when the refrigeration unit (the motor) switches on.
→ The refrigeration increases automatically when the SuperFrost, function is activated, fresh food has just been placed in the appliance or the door has been left open for a while.
▶ The sound is normal.
→ The ambient temperature is too high.
▶ Solution: (see 1.2)

A low hum.
→ The sound is produced by air flow noise of the fan.
▶ The sound is normal.

Vibratory noise.
→ The appliance is not fixed to the ground. The running of the cooling unit therefore makes objects and adjacent furniture vibrate.
▶ Adjust appliance via the height-adjustable feet.
▶ Move bottles and containers apart.

The SuperFrost button flashes together with the temperature display.
→ There is a fault.
▶ Contact the customer service. (see Maintenance).

All LEDs are illuminated in the refrigerator compartment temperature display.
→ Demo mode is activated.
▶ Please contact the after sales service. (see Maintenance).

The outer surfaces of the appliance are warm*.
→ The heat of the refrigeration circuit is used to prevent condensate from forming.
▶ This is normal.

The temperature is not cold enough.
→ The door of the appliance is not properly closed.
▶ Close the door of the appliance.
→ Insufficient ventilation.
▶ Clear ventilation grilles.
→ The ambient temperature is too high.
▶ Solution: (see 1.2) .
→ The appliance was opened too frequently or for too long.
▶ Wait until the appliance reaches the required temperature itself. If not, contact the customer service. (see Maintenance).
→ Too much fresh food was placed inside without SuperFrost.
▶ Solution: (see 5.4.4)
→ The appliance is too close to a source of heat (stove, heater etc).
▶ Change the position of the appliance or the source of heat.

The interior light is not on.
→ The appliance is not switched on.
▶ Switch on the appliance.
→ The door was open longer than 15 min.
▶ The interior light automatically switches off if the door has been open for about 15 min.
→ If the interior light is not on but the temperature display is lit, the bulb is faulty.
▶ Change the bulb. (see Maintenance).

8 Decommissioning

8.1 Switching off the appliance.

Note
▶ To switch off the entire appliance it is necessary only to switch off the freezer compartment. In so doing, the refrigerator compartment is automatically switched off as well.

8.1.1 Switching off the freezer compartment

▶ Using a coin, turn the temperature control of the freezer compartment *Fig. 3 (1)* to 0.
▷ The temperature displays are dark.

8.1.2 Switching off the refrigerator compartment

▶ Using a coin, turn the temperature control of the refrigerator compartment *Fig. 3 (6)* to 0.
▷ The temperature display is dark.

Note
▶ If only the fridge section is to be switched off, e.g. during holiday periods, always make sure that: the temperature display on the freezer section remains lit.

8.2 Taking the appliance out of service

▶ Empty the appliance.
▶ Pull out the power plug.
▶ Clean the appliance (see 6.2) .



▶ Leave the door open to prevent odour.

9 Disposing of the appliance



The appliance contains some reusable materials and should be disposed of properly - not simply with unsorted household refuse. Appliances which are no longer needed must be disposed of in a professional and appropriate way, in accordance with the current local regulations and laws.

When disposing of the appliance, ensure that the refrigeration circuit is not damaged to prevent uncontrolled escape of the refrigerant it contains (data on type plate) and oil.
▶ Disable the appliance.
▶ Pull out the plug.
▶ Cut through the connecting cable.