HUSSMANN®

Impact®

EVOLVE® technologies compatible



Installation, Operation, and Service Manual

Impact® Reach-In

Medium and Low Temperature Remote Display Cases

P/N 0387183 **Rev** Y

February 2026

Models Covered

RL, RM, RMF, RLN, RMN, RLNE, RLNI, RLNIE, RLNS, RMNS, RLTIM, RLTI, RLTM, RLT, RMT, RMTD

Certifications

c UL US LISTED

NSF®

WARNING:

If the information in these instructions are not followed exactly, a fire or explosion may result, causing property damage, personal injury, or death. Installation and service must be performed by a qualified installer or service agency.

READ THE ENTIRE MANUAL BEFORE INSTALLING OR USING THIS EQUIPMENT.

The equipment can be configured to use a variety of refrigerants during the ordering process. Different refrigerants have unique characteristics to be aware of, including the mild flammability of A2L refrigerants and potential toxicity of R-744 (CO_2) in high concentrations. If a leak is present or suspected, do not allow untrained personnel to attempt to find the cause and observe all warnings contained within this document. No open flames, cigarettes, or other possible sources of ignition should be used inside or in the vicinity of equipment containing flammable refrigerants.

Equipment is limited to use in an altitude of 6,562 ft (2 km) or less.

FAILURE TO ABIDE BY THIS WARNING COULD RESULT IN AN EXPLOSION, DEATH, INJURY, AND PROPERTY DAMAGE.

We reserve the right to change or revise specifications and product design in connection with any feature of our products. Such changes do not entitle the buyer to corresponding changes, improvements, additions or replacements for equipment previously sold or shipped.

©2025 Hussmann Corporation • Bridgeton, MO 63044-2483 U.S.A.
U.S. & Canada 1-800-922-1919 • Mexico 800-890-2900 • www.hussmann.com

Spanish P/N 0517045
French P/N 0527085

Table of Contents

User Safety and Product Information **3**
- Legal Disclaimer 3
- ANSI Z535.5 Definitions 3
- Proposition 65 3
- Serial Label Location 4
- UL Listing 4
- NSF Listing 4
- Climate Class and Ambient Conditions 4
- Federal / State Regulation 4
- Additional Important Symbols 4
- General Safety Instructions 5
- Before Working with All Refrigerant Types 6
- Before Working with R-744 (CO_2) Refrigerant 9
- Before Working with A2L Refrigerant 15
- A2L Refrigerant Detection System Overview 17
- Cautions 18
- Model Description 18
- Hussmann Product Control 18

Installation Information **19**
- Equipment Inspection / Shipping Damage 19
- Unloading, Moving, and Transporting Case 19
- Exterior Loading 22
- Location 22
- Minimum Room Floor Area (A2L only) 22
- Leveling Case 25
- Case Joining 25
- Piping Overview 43
- CO_2 Piping 43
- Additional Piping Installation Requirements 45
- Line Connection Sizes 46
- Waste Outlet/Drain Line 46
- Refrigerant Piping 46
- Insulation 49
- Branch Line Piping 49
- Waste Outlet/Drain Line 50
- Electrical Information 53
- Field Wiring 53
- Lighting 54
- Refrigerant Charging Procedure 54
- Pumped Liquid R-744 (CO_2) Start-Up Checklist 55
- Pumped Liquid R-744 (CO_2) Operation 56
- Multiple Restart and Lockout Procedure 57
- Thermostatic Expansion Valve Adjustment 58
- Refrigeration Thermostat 59
- Defrost Termination Thermostat 60
- Control Settings 60
- Safety Shut-Off Valves (A2L only) 62
- Pumped Liquid R-744 (CO_2) Case Inlet Solenoid Valve 63
- Panel, Bumper, and Guard Installation 63
- Sealing Merchandiser to Floor 66
- Door/Glass Adjustment 66
- Shelf Installation 67
- Load Limits 67
- Product Stocking 68
- Thermometer 69

Maintenance and Service **70**
- Checks and Repairs for A2L Equipment 70
- Checks and Repairs for R-744 (CO_2) Equipment 71
- Checks and Repairs for All Equipment 71
- Care and Cleaning 72
- Troubleshooting 75
- Refrigerant Removal, Evacuation, and Recovery 76
- Leak Detection (all refrigerants) 77
- A2L Leak Detection Sensor Service and Mitigation 78
- Component Replacement 84

Decommissioning **90**
- Decommissioning Process 90

Warranty **91**

Revision History **91**

Impact® Reach-In

User Safety and Product Information

Legal Disclaimer

Review all safety warnings on the case and in this manual before attempting start-up. Hussmann shall not be liable for any repair of replacement made without the written consent of Hussmann, or when the product is installed or operated in a manner contrary to the printed instructions covering installation and service which accompanied such product. Please note that failure to follow the instructions in this document may void your factory warranty.

As used herein, “appliance”, “unit”, and “equipment” each refer to case family/name unless otherwise stated or contextualized and “system” means a set of things working together as parts of an interconnecting network.

ANSI Z535.5 Definitions

The definitions below are used to clarify the magnitude and urgency of harm and damage, considering problems arising from misuse. Relative to their potential danger, the definitions are divided into five parts according to ANSI Z535 Series.



DANGER indicates a hazardous situation which, if not avoided, will result in death or serious injury.



WARNING indicates a hazardous situation which, if not avoided, could result in death or serious injury.



CAUTION indicates a hazardous situation which, if not avoided, could result in minor or moderate injury.



NOTICE is used to address practices not related to personal injury.



SAFETY INSTRUCTIONS (or equivalent) signs indicate specific safety-related instructions or procedures.

Proposition 65



This warning does not mean that Hussmann products will cause cancer or reproductive harm, or is in violation of any product-safety standards or requirements. As clarified by the California State Government, Proposition 65 can be considered more of a ‘right-to-know’ law than a pure product safety law. When used as designed, Hussmann believes that our products are not harmful.
We provide the Proposition 65 warning to stay in compliance with California State law. It is your responsibility to provide accurate Proposition 65 warning labels to your customers when necessary. For more information on Proposition 65, please visit the California State Government website.

Hussmann Corporation • Bridgeton, MO 63044-2483 U.S.A. • www.hussmann.com
U.S. & Canada 1-800-922-1919 • Mexico 800-890-2900

Impact® Reach-In

User Safety and Product Information

Serial Label Location

The serial label located on the interior interior top panel of the cabinet Serial label contains all pertinent information such as model, serial number, amperage rating, refrigerant type, and other important installation and safety information.

UL Listing

These merchandisers are manufactured to meet ANSI / UL 60335-2-89 and CSA C22.2 standard requirements for safety. Proper installation is required to maintain this listing. This appliance is to be installed in accordance with the Safety Standard for Refrigeration Systems, ANSI/ASHRAE 15.

NSF Listing

These merchandisers are manufactured to meet ANSI / NSF-7 standard requirements for sanitation. Proper installation is required to maintain this listing. If required by local sanitation codes, or if desired by the customer, plastic splashguards may be sealed to the floor using silicone type sealer.

Climate Class and Ambient Conditions

The test room climate class for this appliance is Climate Class 8. Climate Class 8 means the equipment has been tested for maximum ambient of 75° F (23.9° C) dry bulb and 55% relative humidity.

Ambient conditions that equipment is designed for may exceed 75° F (23.9° C) and 55% relative humidity in some cases. Consult the labeling on the equipment for the maximum ambient temperature and humidity in which the equipment can be installed. Do not exceed the listed ambient conditions.

Federal / State Regulation

These merchandisers, at the time they are manufactured, meet all federal and state/provincial regulations. Proper installation is required to ensure these standards are maintained. Near the serial label, each case carries a label identifying the environment (temperature and relative humidity) in which the case was designed to be used.

In compliance with DOE 2017, standard low-temperature reach-in cases with Innovator I doors are equipped with an anti-sweat controller that maintains the door heat at a level that meets DOE energy limits. Any factory or field-installed anti-sweat controller applied to a low-temperature reach-in case with Innovator I doors must be programmed to cycle the heaters at no more than 50% run-time at design conditions of 75°(23.9° C) and 55% relative humidity for frozen food operating condition.

Additional Important Symbols

The symbols below indicate specific types of information on the equipment.



Risk of fire due to flammable material and/or refrigerant being present

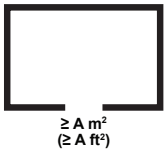

Minimum Room Floor Area



High Pressure



Grounding Connection Location

Hussmann Corporation • Bridgeton, MO 63044-2483 U.S.A. • www.hussmann.com
U.S. & Canada 1-800-922-1919 • Mexico 800-890-2900

Impact® Reach-In

User Safety and Product Information

General Safety Instructions

SAFETY INSTRUCTIONS

This manual was written in accordance with originally prescribed equipment that is subject to change. Hussmann reserves the right to change or revise specifications and product design in connection with any feature of our products.

Personal Protection Equipment (PPE) is required. Wear safety glasses, gloves, protective boots or shoes, long pants, and a long-sleeve shirt when working with this equipment and while handling glass.



The safety of our customers and employees is paramount. The precautions and procedures described in this manual are intended as general methods for safe use of this equipment. Please be sure to comply with the precautions described in this manual to protect you and others from possible harm. Always follow OSHA standards for safety.

Only qualified personnel should install and service this equipment. Personal Protection Equipment (PPE) is required. Wear safety glasses, gloves, protective boots or shoes, long pants, and a long-sleeve shirt when working with this equipment and while handling glass.

Observe the refrigerant type the equipment is designed to work with and any and all precautions on tags, stickers, labels and literature provided and referenced for this equipment. Use only Hussmann approved parts approved through the Hussmann Performance Parts Website. Verify that all repair parts are identical models to the ones they are replacing. Do not substitute parts such as motors, switches, relays, heaters, compressors, power supplies, or solenoids. Read all safety information regarding the safe handling of refrigerant and refrigerant oil, including the Material Safety Data Sheet. MSDS sheets can be obtained from your refrigerant supplier. Service is to be performed by factory-authorized service personnel, so as to minimize the risk of possible injury due to incorrect parts or improper service.

Contractors must strictly adhere to specifications provided by the Engineer of Record (EOR), as well as US EPA regulations, OSHA regulations, and all other federal, state, and local codes. There are numerous hazards, not limited to, but including: burns due to high temperatures or refrigerant flammability, high pressures, toxic substances, electrical arcs and shocks, very heavy equipment with specific lift points and structural constraints, public safety, noise, and possible environmental damage.

⚠WARNING

Before Working with All Refrigerant Types

The following apply to ALL REFRIGERANT TYPES. Refrigerant specific warnings and safety information are present in the following sections. Do not attempt to install, service, or perform maintenance on any equipment without reading and understanding ALL applicable warnings related to the equipment.

READ THE ENTIRE MANUAL AND ALL WARNINGS BEFORE INSTALLING OR USING THIS EQUIPMENT.

- Installation and use of this appliance includes numerous hazards, not limited to, but including: burns due to high temperatures, high pressures, toxic substances, electrical arcs and shocks, very heavy equipment with specific lift points and structural constraints, food and product damage or contamination, public safety, noise, and possible environmental damage.
- This appliance shall only be connected to another appliance suitable for the same refrigerant.
- Be aware that refrigerants may not contain an odour.
- Excessive ambient conditions may cause condensation and sweating on doors. Facility operators are responsible for monitoring doors and floor conditions and ensuring the safety of all persons present. Installation and service must be performed by a qualified installer or service agency only as recommended by the manufacturer.
- If a leak is present or even suspected, do not allow untrained personnel to attempt to find the cause.
- A hand-held leak detector (“sniffer”) will be used before any repair and/or maintenance.
- WARNING: Keep clear of obstruction, all ventilation openings in the appliance enclosure or in the structure for build-in.
- WARNING: Do not use mechanical devices or other means to accelerate the defrosting process, other than those recommended by the manufacturer.
- WARNING: Do not damage the refrigerating circuit.
- WARNING: Do not use electrical appliances inside the food/ice storage compartments unless they are the type recommended by the manufacturer.
- Do not use any means to clean, other than those recommended by the manufacturer.
- Do not use means to accelerate the defrosting process or to clean, other than those recommended by the manufacturer.
- The appliance shall be stored in a room without continuously operating ignition sources (for example: open flames, an operating gas appliance or an operating electric heater).
- Do not pierce or burn refrigerant piping.
- Do not store items or flammable materials atop the unit. Do not walk on case.
- Do not store explosive substances, such as aerosol cans with flammable propellant, in this appliance.
- This appliance is not intended for use by persons (including children) with reduced physical, sensory or mental capabilities, or lack of experience and knowledge, unless they have been given supervision or instruction concerning use of the appliance by a person responsible for their safety.
- Children should be supervised to ensure that they do not play with the appliance.

Impact® Reach-In

User Safety and Product Information

⚠WARNING

- Check that cabling will not be subject to wear, corrosion, excessive pressure, vibration, sharp edges, or any other adverse environmental effects. The check shall also take into account the effects of aging or continual vibration from sources such as compressors or fans.
- Any insulation shall be suitable for use with the material being insulated.
- Protection devices, piping, and fittings shall be protected as far as possible against adverse environmental effects, for example, the danger of water collecting and freezing in relief pipes or the accumulation of dirt and debris.
- Piping material, pipe routing, and installation shall include protection from physical damage in operation and service, and be in compliance with national and local codes and standards, such as ANSI/ASHRAE 15, IAPMO Uniform Mechanical Code, ICC International Mechanical Code, or CSA B52. All field joints shall be accessible for inspection prior to being covered or enclosed. Mechanical connections made in accordance shall be accessible for maintenance purposes.
- The installation of pipe-work shall be kept to a minimum.
- Mechanical connections made in accordance shall be accessible for maintenance purposes.
- Provision shall be made for expansion and contraction of long runs of piping.
- Piping in refrigeration systems shall be so designed and installed to minimize the likelihood of hydraulic shock damaging the system.
- Flexible pipe elements shall be protected against mechanical damage, excessive stress by torsion, or other forces, and that they should be checked for mechanical damage annually.
- Precautions shall be taken to avoid excessive vibration or pulsation of the refrigerant piping.
- LOCK OUT / TAG OUT — To avoid serious injury or death from electrical shock, always disconnect the electrical power at the main disconnect when servicing or replacing any electrical component. This includes, but is not limited to, such items as doors, lights, fans, heaters, and thermostats.
- To reduce the risk of fire, electrical shock or injury when cleaning this merchandiser:
  -Unplug the merchandiser before cleaning.
  -Keep all liquids away from electrical and electronic components.
- Merchandiser must be grounded. All wiring must be in compliance with NEC and local codes.
- The appliance shall not be installed in public corridors or lobbies.
- All servicing of this appliance shall be performed only as recommended in this manual.
- Particular attention shall be paid to the following to ensure that by working on electrical components, the casing is not altered in such a way that the level of protection is affected. This shall include damage to cables, excessive number of connections, terminals not made to original specification, damage to seals, incorrect fitting of glands, etc.
- Ensure that the apparatus is mounted securely.
- Ensure that seals or sealing materials have not degraded to the point that they no longer serve the purpose of preventing the ingress of flammable atmospheres. Replacement parts shall be in accordance with the manufacturer's specifications.

⚠WARNING

- Where electrical components are being changed, they shall be fit for the purpose and to the correct specification. At all times, the manufacturer's maintenance and service guidelines shall be followed. If in doubt, consult the manufacturer's technical department for assistance.
- During repairs to sealed components, all electrical supplies shall be disconnected from the equipment being worked upon prior to any removal of sealed covers, etc. If it is absolutely necessary to have an electrical supply to equipment during servicing, then a permanently operating form of leak detection shall be located at the most critical point to warn of a potentially hazardous situation.
- Component parts shall be replaced with like components, and servicing shall be done by qualified service personnel only.
- Do not apply any permanent inductive or capacitance loads to the circuit without ensuring that this will not exceed the permissible voltage and current permitted for the equipment in use.
- After completion of field piping for split systems, the field pipework shall be pressure tested with an inert gas and then vacuum tested prior to refrigerant charging, according to the following requirements:

1. The minimum test pressure for the low side of the system shall be the low side design pressure and the minimum test pressure for the high side of the system shall be the high side design pressure, unless the high side of the system cannot be isolated from the low side of the system in which case the entire system shall be pressure tested to the low side design pressure.
2. The test pressure after removal of pressure source shall be maintained for at least 1 hour with no decrease of pressure indicated by the test gauge, with test gauge resolution not exceeding 5% of the test pressure.
3. During the evacuation test, after achieving a vacuum level specified in the manual or less, the refrigeration system shall be isolated from the vacuum pump and the pressure shall not rise above 1,500 microns within 10 min. The vacuum pressure level shall be specified in the manual, and shall be the lessor of 500 microns or the value required for compliance with national and local codes and standards, which may vary between residential, commercial, and industrial buildings.

- Solenoid valves of any kind, including safety shut-off valves, shall be correctly positioned in the piping to avoid hydraulic shock.
- Solenoid valves of any kind, including safety shut-off valves, shall not block in liquid refrigerant unless adequate relief is provided to the refrigerant system low pressure side.

FAILURE TO ABIDE BY THESE WARNINGS COULD RESULT IN AN EXPLOSION, DEATH, INJURY, AND PROPERTY DAMAGE. READ ALL WARNINGS PRIOR TO INSTALLING, PERFORMING MAINTENANCE, OR SERVICING THE EQUIPMENT IN ANY WAY.

Impact® Reach-In

User Safety and Product Information

⚠WARNING

Before Working with R-744 (CO_2) Refrigerant

- WARNING: The refrigeration system is under high pressure. Do not tamper with it. Contact qualified service personal before disposal.
- R-744 (CO_2) systems have similar safety concerns with all conventional refrigerants, in that it displaces oxygen, is heavier than air and will concentrate closer to the floor if there is a system leak. R-744 should be monitored for leaks similar to other refrigerants.
- If the refrigeration system is de-energized, venting of the R-744 through the pressure regulating relief valves on the refrigeration system can occur. In such cases, the system might need to be recharged with R-744, but in any case, the pressure regulating relief valve(s) shall not be defeated or capped. The relief setting shall not be altered.
- A sufficient number of pressure relief and pressure regulating relief valves might need to be provided based on the system capacity and located such that no stop valve is provided between the relief valves and the parts or section of the system being protected.
- A pressure relief device shall be installed in the high-pressure side of the refrigeration system between the motor-compressor and the gas cooler. There shall be no shut off devices or other components except piping between the motor-compressor and the pressure relief device that could introduce a pressure drop.
- The pressure relief device shall be mounted so that any refrigerant released from the system during its operation cannot cause harm to the user of the appliance. The aperture shall be located so that it is unlikely to be obstructed in normal use.
- The installed pressure relief device shall have no provisions for setting by the end user.
- The pressure setting of the installed pressure relief device shall be no higher than the design pressure of the high-pressure side.
- Confirm operation of leak detectors (e.g., by exhaling near the sensor), audible / visible alarms, and machine room ventilation before operation.
- Ventilate adjacent enclosed areas to prevent the formation of dangerous concentrations of carbon dioxide.
- Avoid contact of the skin or eyes with solid carbon dioxide (dry ice) or objects cooled by solid carbon dioxide.
- Additional information on the safe use and handling of carbon dioxide can be found in Standards from the Compressed Gas Association Standard (www.cganet.com).
- The following checks shall be applied to installations:
  a. The actual REFRIGERANT CHARGE is in accordance with the room size within which the refrigerant containing parts are installed.
  b. The ventilation machinery and outlets are operating adequately and are not obstructed.
  c. If an indirect refrigerating circuit is being used, the secondary circuit shall be checked for the presence of refrigerant.
  d. Marking to the equipment continues to be visible and legible. Markings and signs that are illegible shall be corrected.
  e. Refrigerating pipe or components are installed in a position where they are unlikely to be exposed to any substance which may corrode refrigerant containing components, unless the components are constructed of materials which are inherently resistant to being corroded or are suitably protected against being so corroded.

⚠WARNING

- Replacement parts must be compatible with the specific equipment's maximum design pressure as shown on the equipment labeling. For example, if the equipment has been designed to meet 1,305 psig (90 bar) maximum design pressure then any replacement part must be 1,305 psig (90 bar) compatible.
- Never apply heat directly to piping containing CO_2. Rapid thermal expansion of CO_2 can cause the pipe to burst.
- Pressure transducers / leak detectors / warning lights / sounders/buzzers / and plant room ventilation must all be operational prior to charging with CO_2.
- Pressure relief devices / check valves must be located anywhere that liquid CO_2 can be trapped. Trapped CO_2 at -40° F (-40° C) will double in volume if allowed to rise to 86° F (30° C).
- Under no circumstances add Schrader valves to or remove Schrader valves from the system.
- Observe all warnings and labels on the unit being installed or serviced such as the one below indicating high pressure.



- All refrigeration servicing must be completed by a certified refrigeration installation professional, and all tubing and components must be qualified for R-744 (CO_2) applications, with a minimum design pressure that matches the system requirements listed on the equipment (e.g., 1,305 psig [90 bar]).
- Inspect all components prior to installation to ensure that they are free from defects or foreign materials and to confirm that they comply with all pressure and temperature ratings.

Asphyxiation

- R-744 is odorless, heavier than air, and is an asphyxiant gas. If sensor reading is maxed out or non-responsive assume an unsafe level of CO_2 and ventilate the room prior to entering.
- Practical limit of R-744 is 0.006 lb/ft3 (56,000 ppm).
- Personnel including rescue workers should not enter areas in which the carbon-dioxide content exceeds 3% (30,000 ppm) by measurement unless wearing an SCBA or supplied-air respirator.
- A leak of R-744 could result in a concentration exceeding the practical limit in an enclosed, occupied space such as a cold room. Precautions must be taken to prevent asphyxiation. These include the use of permanent leak detection, which activates an alarm in the event of a leak.
- The practical limit is defined in ASHRAE 34 but may vary depending on regional regulations. The table below summarizes the effect of R-744 at various concentrations in the air.

PPM of R-744 (CO_2)	Effects
442	concentration in atmosphere
5,000	long-term exposure limit (8 hours)
15,000	short-term exposure limit (10 minutes)
30,000	discomfort, breathing difficulties, headache, dizziness, etc.
100,000	loss of consciousness, followed by death
300,000	quick and immediate death

CO_2 Quality

- CO_2 that is purchased for use in refrigeration systems should be of a purity level high enough to prevent accumulation of non-condensible gases and moisture. A build-up of these gases can block small orifices (such as expansion valves) or lead to high discharge pressure, reducing operation or causing the system to become inoperable.
- CO_2 is commercially available at several different purity levels. The common names and percent purity are listed below. Hussmann recommends using “Refrigeration Grade” (99.99% purity) CO_2.
- Mixing of higher purity grades of CO_2 is acceptable. Lower grades of CO_2 contain higher levels of contaminants and water and will decrease system performance. Higher levels of moisture may react with the CO_2 and form carbonic acid that can degrade component integrity. Hussmann recommends keeping enough refrigeration grade CO_2 on-site to charge the system.
- Medical grade CO_2 should not be used, due to the outlet pressure regulators typically present on tanks.
- Bone-Dry grade is the minimum acceptable purity to ensure proper operation of the equipment and is pure enough to technically prevent accumulation of non-condensible gases in the system.
- R-744 (CO_2) purity:

R-744 (CO_2) Grade	Purity
Industrial and Medical Grade	99.5%
Bone Dry (minimum acceptable)	99.8%
Anaerobic Grade	99.9%
Refrigeration Grade (recommended)	99.99%
Coleman/Instrument Grade	99.99%
Research Grade	99.999%
Ultra-Pure Grade	99.9999%

CO_2 Leak Detection

Leak detectors are required anywhere that CO_2 gas may leak or be vented. Leak detectors provide an alarm if CO_2 is detected at an amount that exceeds the maximum allowable CO_2 concentration. Leak detectors are not provided with the case. Consult local safety codes for exact requirements.

Piping

All piping, whether pre-installed at the factory or added in the field, must be chosen based on the Hussmann engineering transcritical CO_2 specifications, including material type, pipe diameter, and rated maximum working pressure. The design pressure of the system is 1,305 psig (90 bar).

Approved joining methods must be used for all piping and fittings to ensure the pipe’s maximum pressure rating is maintained without reduction. The use roll-stop couplings for straight line pipe joints are recommended. Swaging of pipe joints is not recommended. Swaging weakens the copper at the swage point, reducing the maximum operating pressure rating.

- Piping—minimum design pressure greater than listed design pressure (e.g.,1,305 psig [90 bar])
- Fittings—Mueller Streamline XHP CuFe 1,885 psig (130 bar)
- Braze joints with alloy containing 15% silver (minimum)
  - -Flux materials must contain no zinc and must also be water soluble
  - -All field piping must be purged with nitrogen while brazing
- Schedule 40 carbon steel pipe or stainless-steel pipe
  - -Must protect exterior from corrosion

Insulation

Insulation should be used in secondary system piping to reduce the heat transfer to ambient air and to maintain subcooling in the CO_2 liquid supply line to the case. The insulation should be sized to allow for the worst-case conditions of heating from store lighting and ambient temperatures. Pipe should be insulated according to local codes and customer specifications and manufacturer specifications.

When installing piping that has not been pre-insulated, there are several options for insulation. Closed-cell elastomeric insulation is extremely popular in refrigeration applications. This type of insulation can also be used in secondary system applications.

The manufacturer's internal case piping valves and components are insulated to prevent frost from building. Sufficient insulation is required on piping into the display case to eliminate frost on tubes and to minimize temperature rise of CO_2.

Check Valves and Pressure Relief Devices

Check valves are required wherever there is a possibility of trapping liquid CO_2 between valves that may be shut-off, including solenoid valves, service valves, and balancing valves. Check valves must be installed to vent high-pressure CO_2 back to the system. Hussmann recommends reverse return tubing instead of the use of shut-off valves for balancing purposes, but if shut-off valves are used, they must be relieved to the system through check valves.

⚠WARNING Trapping of liquid CO_2 can result in extremely high pressure and must be avoided to prevent damage to equipment and personal injury.

Solenoid, check, and ball valves with integrated pressure relief must be qualified for CO_2 applications, with a minimum design pressure equal to that listed on the equipment (e.g., 1,305 psig [90 bar]).

The pressure relief device shall be mounted so that any refrigerant released from the system during its operation cannot cause harm to the user of the appliance. The aperture shall be located so that it is unlikely to be obstructed in normal use. The installed pressure relief device shall have no provisions for setting by the end user. The pressure setting of the installed pressure relief device shall be no higher than the design pressure of the high-pressure side.

Startup and Shut Down

If the refrigeration system is de-energized, venting of the R-744 (CO_2) through the pressure regulating relief valves on the refrigeration system can occur. In such cases, the system may need to be recharged with R-744 (CO_2), but in any case, the pressure regulating relief valve(s) are not to be defeated or capped. The relief setting shall not be altered.

Provisions must be made for startup and shutdown to prevent excessive pressures. Consult the pumping station instructions and local codes for requirements.

It is imperative that the case piping is clean and dry prior to charging the system with CO_2. All tubing MUST be rated with a minimum design pressure at or above the rating of the equipment. Consult equipment labeling to confirm pressure rating (e.g., 1,305 psig [90 bar]) before installation.

R-744 (CO2) Pressure-Temperature Chart

A pressure-temperature chart can be found here for reference if needed: https://www.hussmann.com/ns/Supplemental_IO/GD_R-744_CO2_Pressure-Temperature_Chart_M001263_EN.pdf

Example Transcritical CO_2 System Schematic

The system illustrations content in this manual are intended as general references. Diagrams included are for typical units and may differ from the actual unit purchased. Refer to the specific drawings that come with the unit for accurate troubleshooting and maintenance. Additional drawings can be requested if needed.

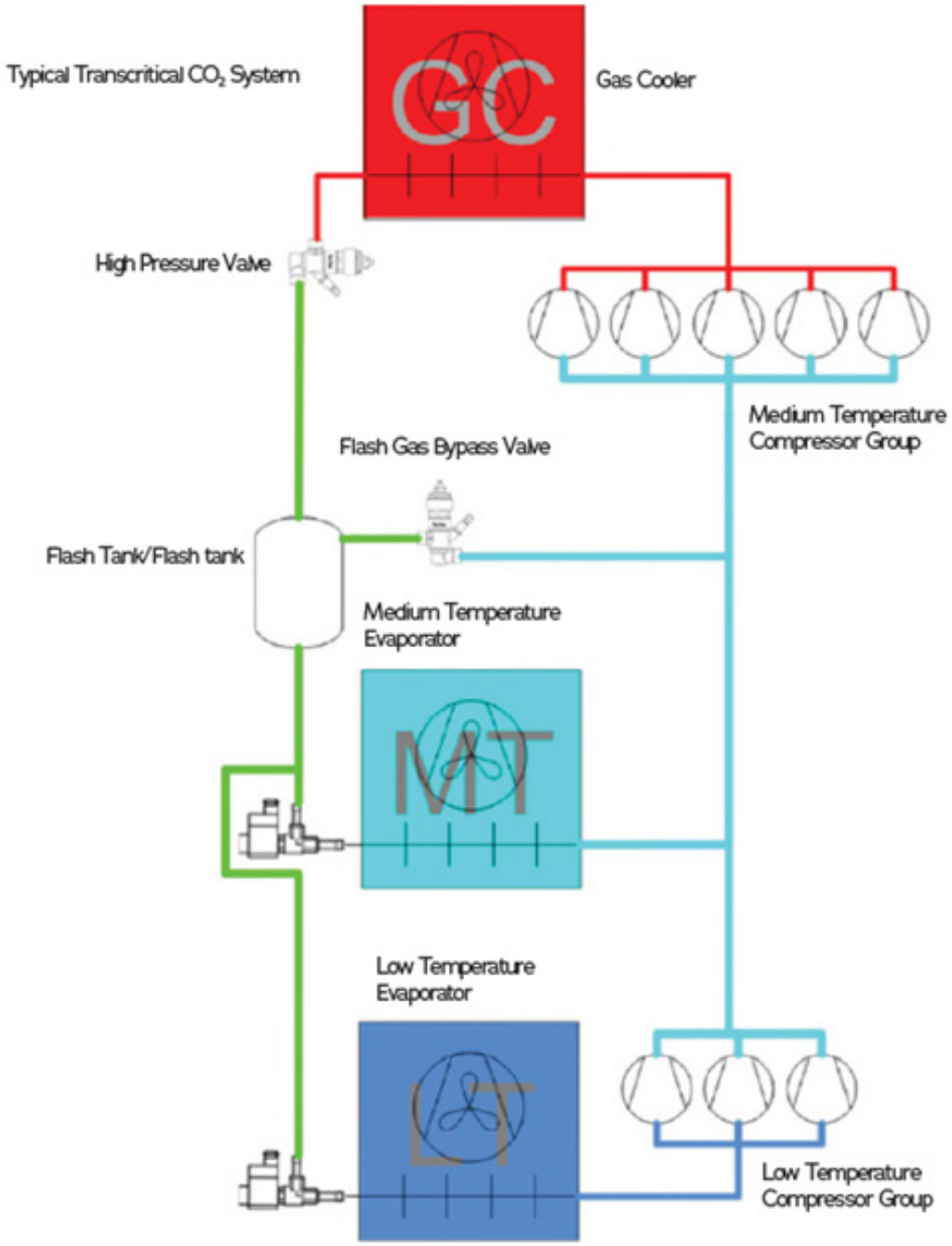

Hussmann Corporation • Bridgeton, MO 63044-2483 U.S.A. • www.hussmann.com
U.S. & Canada 1-800-922-1919 • Mexico 800-890-2900

Example Pumped Liquid CO_2 System Schematic

Example schematic shown, actual design will vary by system.

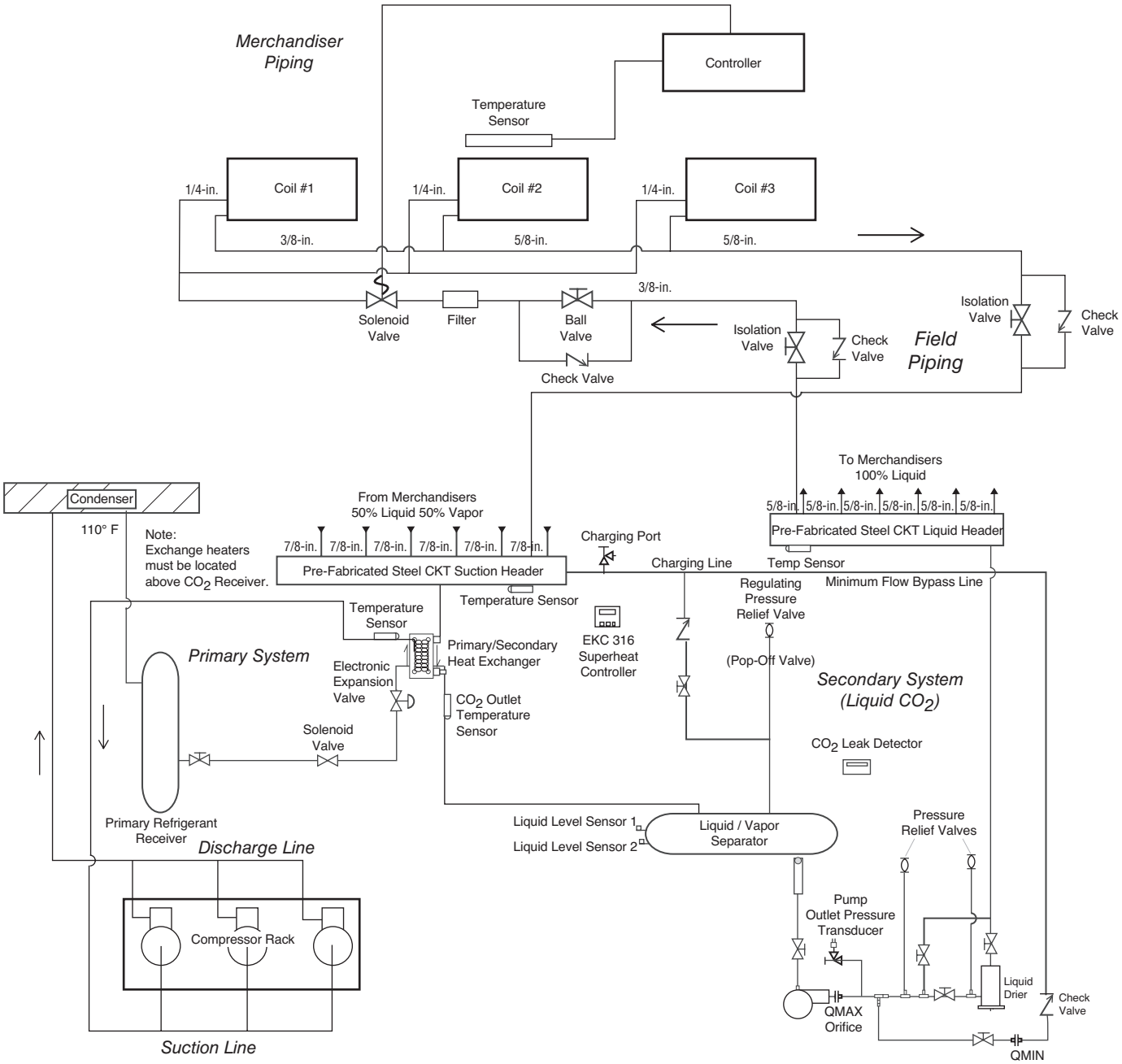

Pumped Liquid CO_2 System Schematic

Impact® Reach-In

User Safety and Product Information

DANGER

Before Working with A2L Refrigerant



- A2L refrigerant is flammable. Equipment that is configured to use A2L refrigerants require special attention. No open flames, cigarettes, or other possible sources of ignition should be used inside or in the vicinity of equipment containing flammable refrigerants.
- Failure to follow instructions can result in an explosion, death, injury and property damage.

WARNING

This refrigeration equipment was manufactured for use with A2L low-flammability refrigerants. Installation and service must only be performed by a qualified service provider.

Failure to abide by this warning could result in an explosion, death, injury, and property damage

- WARNING—Risk of fire or explosion. Flammable refrigerant used. To be repaired only by trained service personnel. Do not puncture refrigerant tubing.
- WARNING—Risk of fire. Dispose of properly in accordance with federal or local regulations. Flammable refrigerant used.
- WARNING—Risk of fire. Flammable refrigerant used. Consult repair manual/owner's guide before attempting to service this product. All safety precautions must be followed.
- WARNING—Risk of fire due to flammable refrigerant used. Follow handling instructions carefully in compliance with national regulations.
- WARNING—Risk of fire or explosion—Store in a well ventilated room without continuously operating flames or other potential ignition.
- WARNING—Risk of fire or explosion—Auxiliary devices which may be ignition sources shall not be installed in the ductwork, other than auxiliary devices listed for use with the specific appliance. See instructions.
- WARNING—In order to reduce flammability hazards the installation of this appliance must only be carried out by a suitably qualified person.
- WARNING—Risk of fire or explosion. Dispose of properly in accordance with federal or local regulations. Flammable refrigerant used.
- A2L refrigerants are denser than air.
- No open flames, cigarettes, or other possible sources of ignition should be used inside the building where the units are located until the qualified service technician and/or local fire department determines that all refrigerant has been cleared from the area and from the refrigeration systems.
- Component parts are designed for use with flammable refrigerants and are non-incendive and non-sparking. To minimize the risk of possible ignition due to incorrect parts, component parts shall only be replaced with identical repair parts. Servicing shall be done by qualified service personnel only, so as to minimize the risk of possible damage due to incorrect parts or improper service.
- Intrinsically safe components are the only types that can be worked on while live in the presence of a flammable atmosphere. The test apparatus shall be at the correct rating.

⚠WARNING

- Replace components only with parts specified by the manufacturer. Other parts can result in the ignition of refrigerant in the atmosphere from a leak.
- Ducts connected to an appliance shall not contain a potential ignition source.
- Factory installed refrigerant sensors or detectors shall not be disconnected.
- Prior to beginning work on systems containing FLAMMABLE REFRIGERANTS, safety checks are necessary to ensure that the risk of ignition is minimized.
- Work shall be undertaken under a controlled procedure so as to minimize the risk of a flammable gas or vapor being present while the work is being performed.
- All maintenance staff and others working in the local area shall be instructed on the nature of work being carried out. Work in confined spaces shall be avoided.
- The area shall be checked with an appropriate refrigerant detector prior to and during work, to ensure the technician is aware of potentially toxic or flammable atmospheres. Ensure that the leak detection equipment being used is suitable for use with all applicable refrigerants, i.e., non-sparking, adequately sealed, or intrinsically safe.
- If any hot work is to be conducted on the refrigerating equipment or any associated parts, appropriate fire extinguishing equipment shall be available on hand. A dry chemical or CO_2 fire extinguisher should be adjacent to the charging area.
- No person carrying out work in relation to a REFRIGERATING SYSTEM which involves exposing any pipe work shall use any sources of ignition in such a manner that it may lead to the risk of fire or explosion. All possible ignition sources, including cigarette smoking, should be kept sufficiently far away from the site of installation, repairing, removing and disposal, during which refrigerant can possibly be released to the surrounding space. Prior to work taking place, the area around the equipment shall be surveyed to make sure that there are no flammable hazards or ignition risks. “No Smoking” signs shall be displayed.
- Ensure that the area is in the open or that it is adequately ventilated before breaking into the system or conducting any hot work. A degree of ventilation shall continue during the period that the work is carried out. The ventilation should safely disperse any released refrigerant and preferably expel it externally into the atmosphere.
- Where electrical components are being changed, they shall be fit for the purpose and to the correct specification. At all times, the manufacturer’s maintenance and service guidelines shall be followed. If in doubt, consult the manufacturer’s technical department for assistance.

The following checks shall be applied to installations using FLAMMABLE REFRIGERANTS:

a. The actual REFRIGERANT CHARGE is in accordance with the room size within which the refrigerant containing parts are installed.
b. The ventilation machinery and outlets are operating adequately and are not obstructed.
c. If an indirect refrigerating circuit is being used, the secondary circuit shall be checked for the presence of refrigerant.
d. Marking to the equipment continues to be visible and legible. Markings and signs that are illegible shall be corrected.
e. Refrigerating pipe or components are installed in a position where they are unlikely to be exposed to any substance which may corrode refrigerant containing components, unless the components are constructed of materials which are inherently resistant to being corroded or are suitably protected against being so corroded.

A2L Refrigerant Detection System Overview

Refrigerant Detection System

This equipment uses a Danfoss A2L gas sensor for gas concentration monitoring as standard, factory-installed equipment. Check your individual equipment's parts list to confirm which sensor your equipment uses before ordering replacements.

Application

A2L detection devices represent distinctive and intelligent refrigerant or flammable gas detectors. They are designed to identify and precisely measure A2L refrigerants commonly employed in refrigeration applications—detecting potential flammable gas leaks. A2L stationary gas sensors are engineered to continuously monitor and identify leaks of specific flammable refrigerants.

Installer And Operator Responsibility

Sensors require installation and maintenance by a qualified technician who follows all instructions and adheres to the prevailing standards in their respective industry and location. It is crucial to note that these guidelines serve as a reference, and the manufacturer disclaims any responsibility for misuse, improper installation, or operation of these components.

Failure to install and operate the equipment in conformity with provided instructions and all industry and local guidelines may result in severe injuries, including fatality, for which the manufacturer will not be held accountable.

Maintenance

Although the A2L sensor does not require calibration throughout its operational lifespan, routine maintenance is essential to ensure its proper functioning. Routine maintenance involves checking that the sensor membrane is clean and not blocked. Blockage can be removed by lightly brushing with a clean, damp cloth.

Verify its correct operation regularly as part of a maintenance routine. Avoid cleaning the device with corrosive chemicals, solvents, or abrasive detergents. Refrain from spraying cleaning or polishing aerosols onto the device.

View the "A2L Leak Detection Sensor Service and Mitigation" section for information on components, maintenance, and service.

Sensor Life

Leak sensors have an expected fifteen-year lifespan. If any malfunction happens, and it cannot be fixed following the proper troubleshooting procedure before this period, replace it immediately to prevent any fault. This component must be replaced with the same exact part by authorized service personnel only.

It is imperative that the refrigerant sensor, which has been initially installed at the factory, remains integral and should not be intentionally disconnected. Unauthorized disconnection of the factory-installed refrigerant sensor is strictly prohibited, and maintaining its operational status is essential for ensuring the ongoing safety and functionality of the system. Any tampering or disconnection may compromise the ability to detect and alert to the presence of refrigerant, posing potential risks to both equipment and personnel. It is imperative to adhere to these guidelines to uphold the integrity of the refrigeration system and comply with safety standards.

Sensor Location and Position

The location and position of the refrigerant sensor is critical and it should not be moved. It is crucial that the sensors are located only as defined by manufacturer. The position has been determined by laboratory testing to maximize effectiveness in detecting any leak promptly. Positioning sensors as directed by the manufacturer provides accurate performance of the sensor and enhances the overall safety and reliability of the system.

The sensor has an ongoing, self-testing routine to determine if a malfunction has occurred. If the sensor detects a malfunction, the sensor will trigger a mitigation event. Additionally, when the sensor reaches end of life, it will trigger a mitigation event. In both cases, the sensor will need to be replaced to restart the system.

Splashguard Fans for A2L-Equipped Models

Splashguard fans are required in some cases (e.g., Impact reach-in cases). The fans are designed to mitigate potential flammability risks and ensure compliance with UL and ASHRAE safety standards.

A2L refrigerants are mildly flammable. A leak inside or outside the case can pose a hazard if refrigerant pools in stagnant areas. If a leak occurs, the shut-off valve system will limit the amount of refrigerant leaked, while the splashguard fan(s) mitigate flammability risk caused by the leaked refrigerant by dispersing leaked vapors away from confined spaces and toward the case's ventilation path. This ensures concentrations remain below the lower flammability limit (LFL). The splashguard fan is mounted at the bottom of the case, where refrigerant is most likely to accumulate.

As with the leak detection system, the case will not operate if the splashguard fans are not properly installed and in working order as a safety precaution. Do not attempt to operate the case without splashguard fans fully installed. See page 64 for splashguard fan installation procedure.

⚠CAUTION

- For low temperature cases, to ensure proper door gasket seal, remove all shipping retainers and energize all anti-sweat, fan, and light circuits two to four hours prior to initiating refrigeration cycle.
- Do not exceed eight hours of energized circuits without refrigeration. Damage or product failure may occur and void the warranty. Do not remove the associated label until refrigeration is initiated.
- Do not use hot/warm water on cold glass surfaces. This can cause the glass to shatter and could result in personal injury. Allow glass fronts to warm before applying hot/warm water.
- Do not allow cleaning agent or cloth to contact food product.
- Product will be degraded and may spoil if allowed to sit in a non-refrigerated area.

NOTICE

- Merchandiser must operate for 24 hours before loading product.
- Regularly check merchandiser temperatures.
- Do not break the cold chain. Keep products in cooler before loading into merchandiser.
- Merchandisers are designed for loading ONLY pre-chilled products.

Model Description

Impact reach-in case models are designed for the display of either low or medium temperature products, depending on the models' configuration. These models have standard, narrow, or tall footprint variants. 1-door to 5-door configurations are available for most models. These cases are compatible for use with HFC, HFO (including A2Ls), HCFC, CO_2.

Hussmann Product Control

Serial number and shipping date of all equipment is recorded in Hussmann's files for warranty and replacement part purposes. All correspondence pertaining to warranty or parts ordering must include the serial number of each piece of equipment involved. This is to ensure the customer is provided with the correct parts.

Equipment Inspection / Shipping Damage

Upon delivery of the equipment, verify that the correct equipment has been received by comparing the information on the equipment serial label with the ordering and submittal documents. All equipment should be thoroughly examined for shipping damage before and during unloading. Equipment has been carefully inspected at our factory prior to shipment. Any claim for loss or damage must be made to the carrier. The carrier will provide any necessary inspection reports and/or claim forms.

Apparent Loss or Damage

If there is an obvious loss or damage, it must be noted on the freight bill or express receipt and signed by the carrier's agent; otherwise, carrier may refuse claim.

Concealed Loss or Damage

When loss or damage is not apparent until after equipment is uncrated, retain all packing materials and submit a written response to the carrier for inspection within 15 days.

Unloading, Moving, and Transporting Case

Move the merchandiser as close as possible to its permanent location and remove all packaging. Check for damage before discarding packaging. Remove all separately packed accessories such as kits and shelves.

Do not remove shipping braces until the merchandiser is positioned for installation.
Improper handling may cause damage to the merchandiser when unloading. To avoid damage do not drag the merchandiser out of the trailer. Use a Lever Bar (also known as a Mule, Johnson Bar, J-Bar, Lever Dolly, or Pry Lever) where applicable. Locate the shipping block in the center of the heat exchanger (see illustration), and remove it before piping the merchandiser. This block was installed to minimize shipping vibration. If the case was shipped with the end installed, two long bolts were used to hold the shipping brace to the end. If the shipping bolts are reinserted after removing the brace, they will extend into the product area and may damage the coil. Therefore, be sure to replace these bolts with the shorter bolts provided. Be careful not to damage the factory-installed end while moving the merchandiser. Make sure that tools are positioned past the end and beneath the merchandiser's support bar.

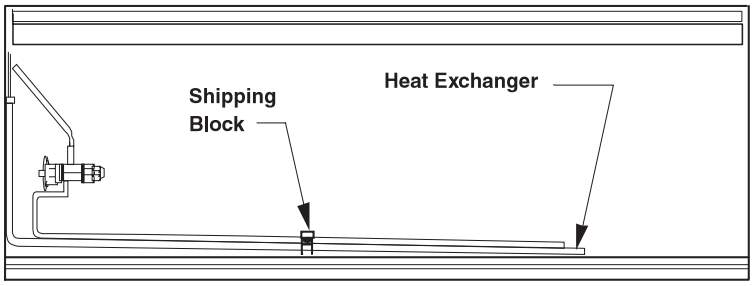

Top View of Merchandiser

Impact® Reach-In
Installation Information

Moving Merchandiser through Narrow Store Entrances:

Some exterior merchandiser parts may be disassembled for transit access through small doors or passage ways. This procedure takes approximately 30 minutes to disassemble and reassemble one case. Contact your Hussmann representative to see if store merchandisers have this kit option.

- The case height without these components installed on top is 82.75 in. (2102 mm).
- Case depth is 35.5 in. (902 mm) with handles, wireway pan, and external frames removed.

Follow the steps below to decrease the merchandiser profile for narrow access:

1. Remove the door handles.

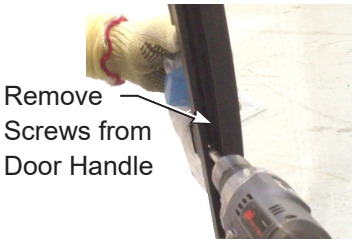

2. Remove the front bumper. Pull from the bottom and set aside.

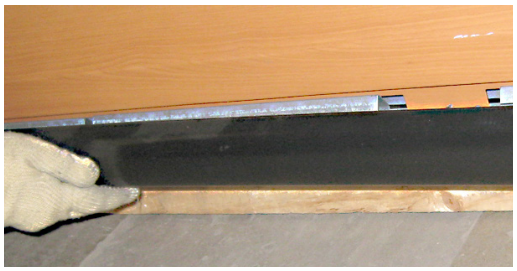

3. Remove the lower front panel to access the wireway.

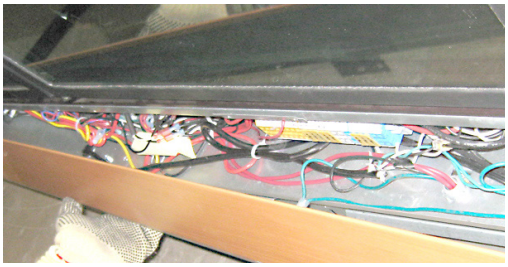

4. Remove the screws that attach the wireway pan to the bottom assembly.

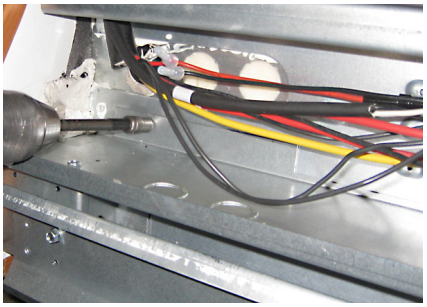

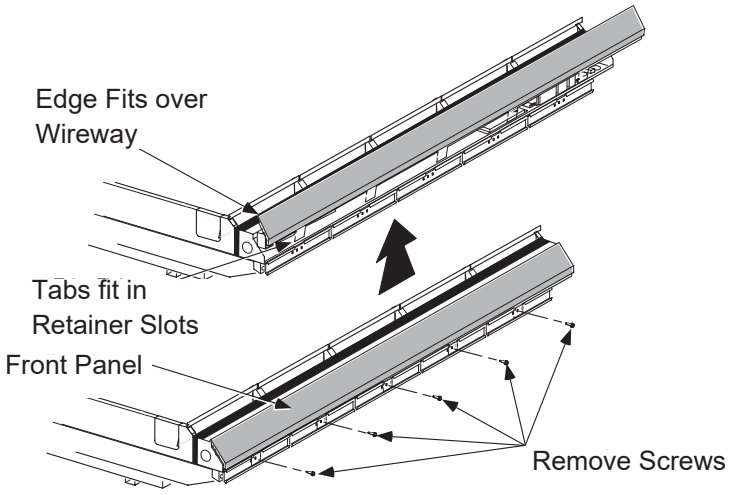

Hussmann Corporation • Bridgeton, MO 63044-2483 U.S.A. • www.hussmann.com
U.S. & Canada 1-800-922-1919 • Mexico 800-890-2900

5. Detach the rubber and plastic gromets from the wireway pan.

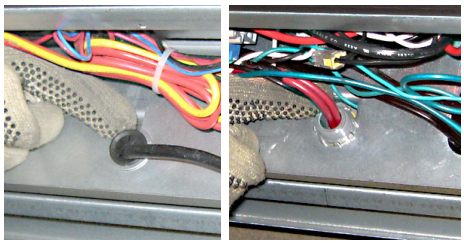

6. Remove the screws that attach the grounding lug to the wireway pan.

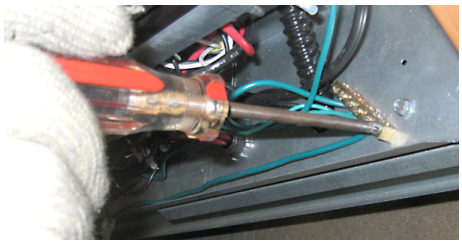

7. Slide the wireway pan out, and remove it from the case. Bumper brackets and supports are attached to wireway pan. Removing the pan will remove the entire assembly.

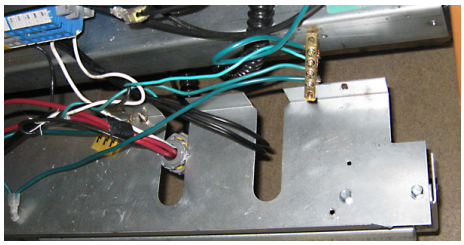

8. Remove the back, external braces from the rear of the case as shown below.
   Braces will slide straight back away from the case when nuts and screws are removed.

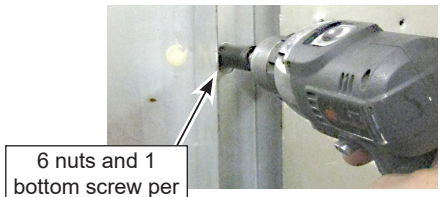

6 nuts and 1 bottom screw per external brace

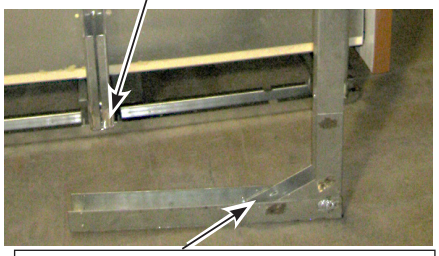

Bottom screw is located approximately 10 inches inboard from the rear of the case. Bottom screw location on removed rear brace.

Check the following before the rear of the case is positioned at its final location according to the store plan:

1. The external braces must be reinstalled with (6) nuts per brace, torqued to 24 foot pounds (32.5 Mn).

Final location:

Once the case reaches its final location, reassemble the wireway and door handles as follows:

1. Reinstall wireway pan in reverse order of removal.
2. The ground lug must be reinstalled using the screws provided.
3. Replace the conduit connectors and plastic gromets to the wireway pan.
4. Replace wireway cover, bumper and door handles.

Note: Rear external frames must be reinstalled securely before setting or unloading shelves.

Hussmann Corporation • Bridgeton, MO 63044-2483 U.S.A. • www.hussmann.com
U.S. & Canada 1-800-922-1919 • Mexico 800-890-2900

Exterior Loading

Do NOT walk on top of the merchandiser or damage to the merchandisers and serious personal injury could occur. Merchandisers are not structurally designed to support excessive external loading such as the weight of a person. Do not place heavy objects on the merchandiser.

Location

These merchandisers are designed for displaying products in air-conditioned stores where temperature is maintained at or below the ANSI / NSF-7 specified level and relative humidity is maintained at or below 55%. Refer to the label located on the merchandiser for the recommended maximum ambient operating temperature and relative humidity. Do not exceed the listed ambient conditions.

Placing refrigerated merchandisers in direct sunlight, near hot tables, or near other heat sources could impair their efficiency. Like other merchandisers, these are sensitive to air disturbances. Air currents passing around merchandisers can seriously impair their operation. Do NOT allow air conditioning, electric fans, open doors or windows, etc., to create air currents around the merchandiser.

A 4-inch (102 mm) space between the rear of the merchandiser and wall must be maintained for air circulation, except for back-to-back merchandisers. However, in high ambient conditions, sweating may still occur. If this happens, install a method of forced ventilation such as a fan ventilation kit.

Note: Under no circumstances should the top or rear of the case be in contact with elements (such as building structures, drywall, etc.) that may restrict airflow or impact operation. Consult listed clearances, or if uncertain, contact a Hussmann representative prior to installation.

Minimum Room Floor Area (A2L only)



The “Minimum Room Floor Area” label provides the minimum room size into which the equipment can be placed. It is the responsibility of the installer to ensure any additional piping and/or equipment is also accounted for separately during installation. Equipment shall not be placed in a room with a floor area less than the value indicated next to the symbol.

Note: Refer to the “Minimum Room Floor Area Table (piping)” to reference the appropriate piping value(s) where needed.

There are two elements related to the room area: Minimum and Actual. Based on the releasable charge determined by internal volume of every component in the equipment, a Minimum Area is calculated. The equipment cannot be used in a space with an area smaller than the Minimum Area. Depending on the Actual Area of the room, different mitigation actions are determined. The Actual Area is based on the inside dimensions of the enclosed space.

Any fluid circuits connected to the appliance (such as to a water heat exchanger) shall safely release abnormal pressure. It shall not allow the release of FLAMMABLE REFRIGERANT into areas served by the other circuits if these do not comply with minimum room area limit.

[A] Approximate charge based on normal operating conditions

Impact® Reach-In

Installation Information

Minimum Room Floor Area Table

Model	Minimum Room Floor Area ft² (m²)	Estimated Refrigerant Charge[A] — lb (g)	
		Operating Charge	
		R-454A	R-454C
RL1, RLN1	115 (10.7)	1.4 (630)	1.4 (630)
RL2, RLN2, RLNE2	115 (10.7)	2.1 (955)	2.1 (955)
RL3, RLN3, RLNE3	157 (14.6)	3 (1,366)	3 (1,366)
RL4, RLN4	157 (14.6)	4.2 (1,910)	4.2 (1,910)
RL5, RLN5	157 (14.6)	5.1 (2,321)	5.1 (2,321)
RM2, RMF2, RMN2	115 (10.7)	2.1 (945)	2.1 (945)
RM3, RMF3, RMN3	157 (14.6)	3 (1,354)	3 (1,354)
RM4, RMF4, RMN4	157 (14.6)	4.1 (1871)	4.2 (1,889)
RM5, RMF5, RMN5	157 (14.6)	5 (2,277)	5.1 (2,299)
RLNI2	115 (10.7)	4.2 (1,910)	4.2 (1,910)
RLNI3	157 (14.6)	6 (2,731)	6 (2,731)
RLNI4	157 (14.6)	8.3 (3,774)	8.4 (3,820)
RLNI5	157 (14.6)	10.1 (4,587)	10.2 (4,641)
RLNS2	115 (10.7)	1.9 (861)	1.9 (861)
RLNS3	157 (14.6)	2.7 (1,243)	2.7 (1,243)
RLNS4	157 (14.6)	3.8 (1,723)	3.8 (1,723)
RLNS5	157 (14.6)	4.6 (2,105)	4.6 (2,105)
RMNS2	115 (10.7)	1.9 (852)	1.9 (852)
RMNS3	157 (14.6)	2.7 (1,230)	2.7 (1,230)
RMNS4	157 (14.6)	3.7 (1,686)	3.8 (1,703
RMNS5	157 (14.6)	4.5 (2,061)	4.6 (2,082)
RLTIM2	115 (10.7)	4.4 (2,004)	4.5 (2,028)
RLTIM3	157 (14.6)	6.5 (2,941)	6.6 (2,976)
RLTIM4	157 (14.6)	8.8 (4,008)	9 (4,057)
RLTIM5	157 (14.6)	10.9 (4,945)	11 (5,004)
RLTM2	115 (10.7)	2.2 (1,007)	2.2 (1,007)
RLTM3	157 (14.6)	3.2 (1,463)	3.3 (1,481)
RLTM4	157 (14.6)	4.4 (2,014)	4.4 (2,014)
RLTM5	157 (14.6)	5.4 (2,458)	5.5 (2,488)
RMTM2	115 (10.7)	2.2 (997)	2.2 (997)
RMTM3	157 (14.6)	3.2 (1,466)	3.2 (1,466)
RMTM4	157 (14.6)	4.4 (1,994)	4.4 (1,994)
RMTM5	157 (14.6)	5.4 (2,462)	5.4 (2,462)
RMTD2	115 (10.7)	2.2 (997)	2.2 (997)
RMTD3	157 (14.6)	3.2 (1,461)	3.2 (1,461)
RMTD4	157 (14.6)	4.3 (1,965)	4.4 (1,984)
RMTD5	157 (14.6)	5.4 (2,453)	5.4 (2,453)

[A] Approximate charge based on normal operating conditions.

Hussmann Corporation • Bridgeton, MO 63044-2483 U.S.A. • www.hussmann.com
U.S. & Canada 1-800-922-1919 • Mexico 800-890-2900

Impact® Reach-In

Installation Information

Minimum Room Floor Area Table (piping)

Liquid Line Piping Minimum Area in ft² (m²)										
Line Length ft (m)	Line Size (OD)									
	3/8"	1/2"	5/8"	7/8"	1 1/8"	1 3/8"	1 5/8"	1 7/8"	2 1/8"	2 5/8"
5 (1.5)	25 (2.3)	30 (2.8)	40 (3.7)	60 (5.6)	85 (7.9)	125 (11.6)	165 (15.3)	220 (20.4)	275 (25.5)	410 (38.1)
10 (3)	30 (2.8)	45 (4.2)	60 (5.6)	100 (9.3)	155 (14.4)	225 (20.9)	315 (29.2)	420 (39)	530 (49.2)	805 (74.8)
15 (4.6)	40 (3.7)	55 (5.1)	80 (7.4)	140 (13)	225 (20.9)	330 (30.7)	460 (42.7)	620 (57.6)	785 (72.9)	1,200 (111.5)
20 (6.1)	45 (4.2)	70 (6.5)	100 (9.3)	180 (16.7)	290 (26.9)	435 (40.4)	605 (56.2)	825 (76.6)	1,040 (96.6)	1,590 (147.7)
25 (7.6)	50 (4.6)	80 (7.4)	120 (11.1)	220 (20.4)	360 (33.4)	540 (50.2)	755 (70.1)	1,025 (95.2)	1,300 (120.8)	1,985 (184.4)
30 (9.1)	60 (5.6)	95 (8.8)	140 (13)	260 (24.2)	430 (39.9)	645 (59.9)	900 (83.6)	1,225 (113.8)	1,555 (144.5)	2,380 (221.1)
40 (12.2)	70 (6.5)	120 (11.1)	180 (16.7)	340 (31.6)	565 (52.5)	850 (79)	1,195 (111)	1,625 (151)	2,065 (191.8)	3,165 (294)
50 (15.2)	85 (7.9)	145 (13.5)	220 (20.4)	420 (39)	705 (65.5)	1,060 (98.5)	1,490 (138.4)	2,030 (188.6)	2,575 (239.2)	3,950 (367)
75 (22.9)	115 (10.7)	210 (19.5)	325 (30.2)	625 (58.1)	1,045 (97.1)	1,580 (146.8)	2,225 (206.7)	3,035 (282)	3,855 (358.1)	5,915 (549.5)
100 (30.5)	150 (13.9)	270 (25.1)	425 (39.5)	825 (76.6)	1,385 (128.7)	2,100 (195.1)	2,960 (275)	4,040 (375.3)	5,135 (477.1)	7,885 (732.5)
Vapor Line Piping Minimum Area in ft² (m²)										
Line Length ft (m)	Line Size (OD)									
	3/8"	1/2"	5/8"	7/8"	1 1/8"	1 3/8"	1 5/8"	1 7/8"	2 1/8"	2 5/8"
5 (1.5)	20 (1.9)	20 (1.9)	20 (1.9)	20 (1.9)	20 (1.9)	20 (1.9)	20 (1.9)	25 (2.3)	25 (2.3)	30 (2.8)
10 (3)	20 (1.9)	20 (1.9)	20 (1.9)	20 (1.9)	20 (1.9)	25 (2.3)	25 (2.3)	30 (2.8)	30 (2.8)	40 (3.7)
15 (4.6)	20 (1.9)	20 (1.9)	20 (1.9)	20 (1.9)	25 (2.3)	25 (2.3)	30 (2.8)	35 (3.3)	40 (3.7)	50 (4.6)
20 (6.1)	20 (1.9)	20 (1.9)	20 (1.9)	25 (2.3)	25 (2.3)	30 (2.8)	35 (3.3)	40 (3.7)	45 (4.2)	60 (5.6)
25 (7.6)	20 (1.9)	20 (1.9)	20 (1.9)	25 (2.3)	30 (2.8)	30 (2.8)	40 (3.7)	45 (4.2)	50 (4.6)	70 (6.5)
30 (9.1)	20 (1.9)	20 (1.9)	20 (1.9)	25 (2.3)	30 (2.8)	35 (3.3)	40 (3.7)	50 (4.6)	60 (5.6)	80 (7.4)
40 (12.2)	20 (1.9)	20 (1.9)	25 (2.3)	25 (2.3)	35 (3.3)	40 (3.7)	50 (4.6)	60 (5.6)	70 (6.5)	100 (9.3)
50 (15.2)	20 (1.9)	20 (1.9)	25 (2.3)	30 (2.8)	35 (3.3)	45 (4.2)	55 (5.1)	70 (6.5)	85 (7.9)	120 (11.1)
75 (22.9)	20 (1.9)	25 (2.3)	25 (2.3)	35 (3.3)	45 (4.2)	60 (5.6)	75 (7)	95 (8.8)	120 (11.1)	170 (16)
100 (30.5)	20 (1.9)	25 (2.3)	30 (2.8)	40 (3.7)	55 (5.1)	75 (7)	95 (8.8)	125 (11.6)	150 (13.9)	225 (20.9)

Hussmann Corporation • Bridgeton, MO 63044-2483 U.S.A. • www.hussmann.com
U.S. & Canada 1-800-922-1919 • Mexico 800-890-2900

Impact® Reach-In
Installation Information

Leveling Case

Be sure to position merchandisers properly, then level all four corners. Merchandiser(s) must be installed level to ensure proper operation of the refrigeration system and to ensure proper drainage of defrost water. This merchandiser must be installed level (from back to front and side to side) to allow maximum draining. Choose a level area to install merchandiser. When leveling merchandisers, use a carpenter's level as shown.

Metal leveling shims or wedges are provided with each merchandiser for use if needed. Place shims under the rail and make sure that they are positioned at a base component (crossbar). This transfers the weight directly from the loaded case through to the floor. Placing shims at other locations will cause uneven distribution of weight leading to piping leaks, as well as sagging or wracked doors. Bottom front supports must be shimmed if not in full contact with the floor.

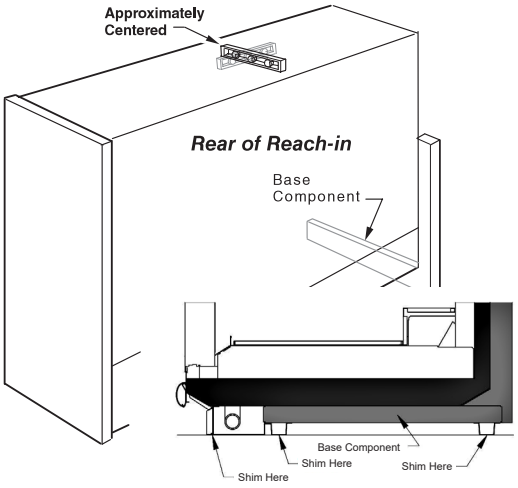

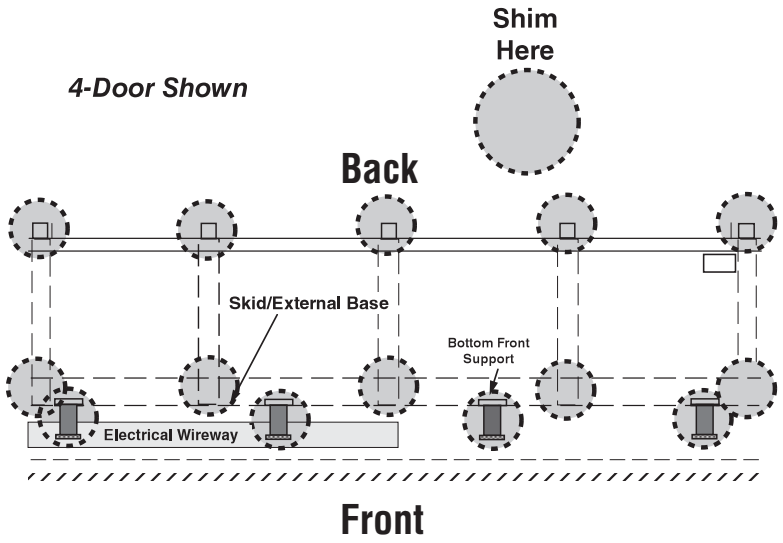

Case Joining

Joining kits and instructions are shipped with each merchandiser as ordered. To join like fixtures, a joining kit is required. Sectional construction means that two or more merchandisers may be joined in line yielding one long, continuous display requiring only one pair of ends.

- To join unlike fixtures, or like fixtures operating at different temperatures, a 2-inch (51 mm) partition kit is required.
- To join same temperature merchandisers on different defrost cycles, a plexiglass partition kit is required.
- All joints must be air-tight to prevent formation of ice or condensation.

Joining Parts List

Item Number	Quantity					Part Description (inches)
	RL, RM, RMF	RLTIM	RLNS, RLN, RMNS, RMN	RLNIM, RLNIE	RMTM, RLTM, RMTD	
1	2	4	2	4	2	Donut Gasket
2	1	4	1	2	2	Gasket, .906 x 1/2 x 200
3	1	2	1	2	1	Gasket, 1/2 x 1/4 x 600
4	8	12	8	14	6	Cap Screw 5/16 -18 x 11/4
5	8	12	8	14	6	Split Lock Washers 5/16
6	1	2	1	2	1	Joint Molding
7	5	10	5	10	5	Binder Post and Screw
8	1	2	1	2	1	Splice Connector

Hussmann Corporation • Bridgeton, MO 63044-2483 U.S.A. • www.hussmann.com
U.S. & Canada 1-800-922-1919 • Mexico 800-890-2900

Carefully unpack and inspect the joining parts listed above to verify completeness and that there is no damage.

Note: Splashguard brackets must be installed before piping or wiring case.

1. Prepare cases for joining (both sides of islands) as shown in Figure 1.

a. Remove bumpers, rails, packing materials, and splashguards from the both cases.
b. Remove shelves (if installed).
c. Remove display racks and pans from ends to be joined.
d. Remove plenum covers.
e. Remove back panels from ends to be joined by lifting up and out near the bottom. No tools are necessary.
f. The RLTM models have upper and lower back panels that must be removed.

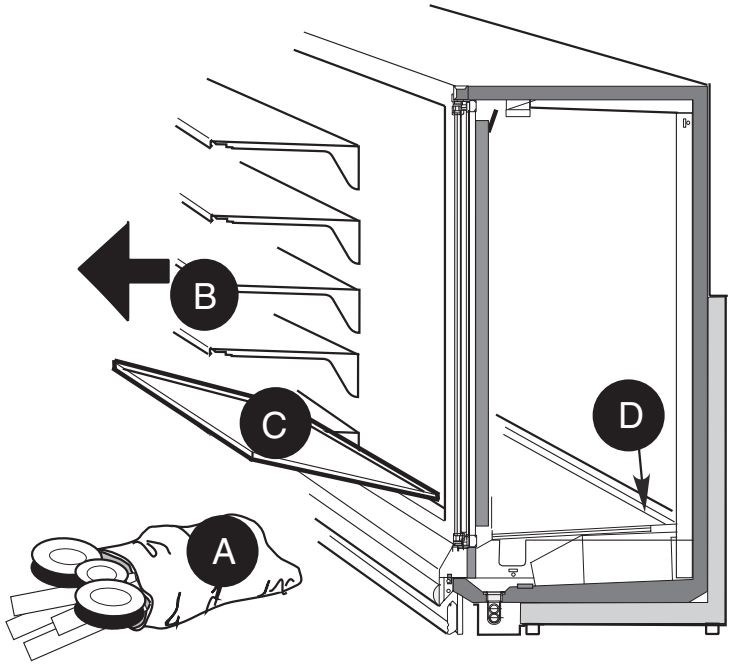

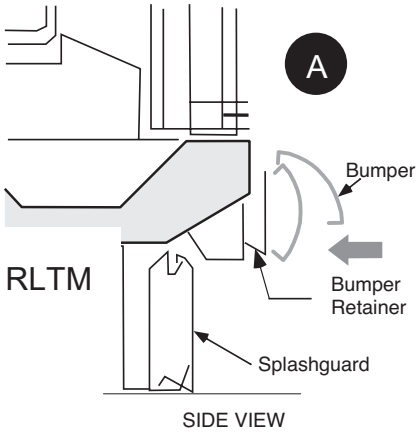



Hussmann Corporation • Bridgeton, MO 63044-2483 U.S.A. • www.hussmann.com
U.S. & Canada 1-800-922-1919 • Mexico 800-890-2900

g. Remove joint molding from any door frames that will be joined to another case.
h. RLNI only: Remove screws and interior top panel on both sides of the island case end to be joined.

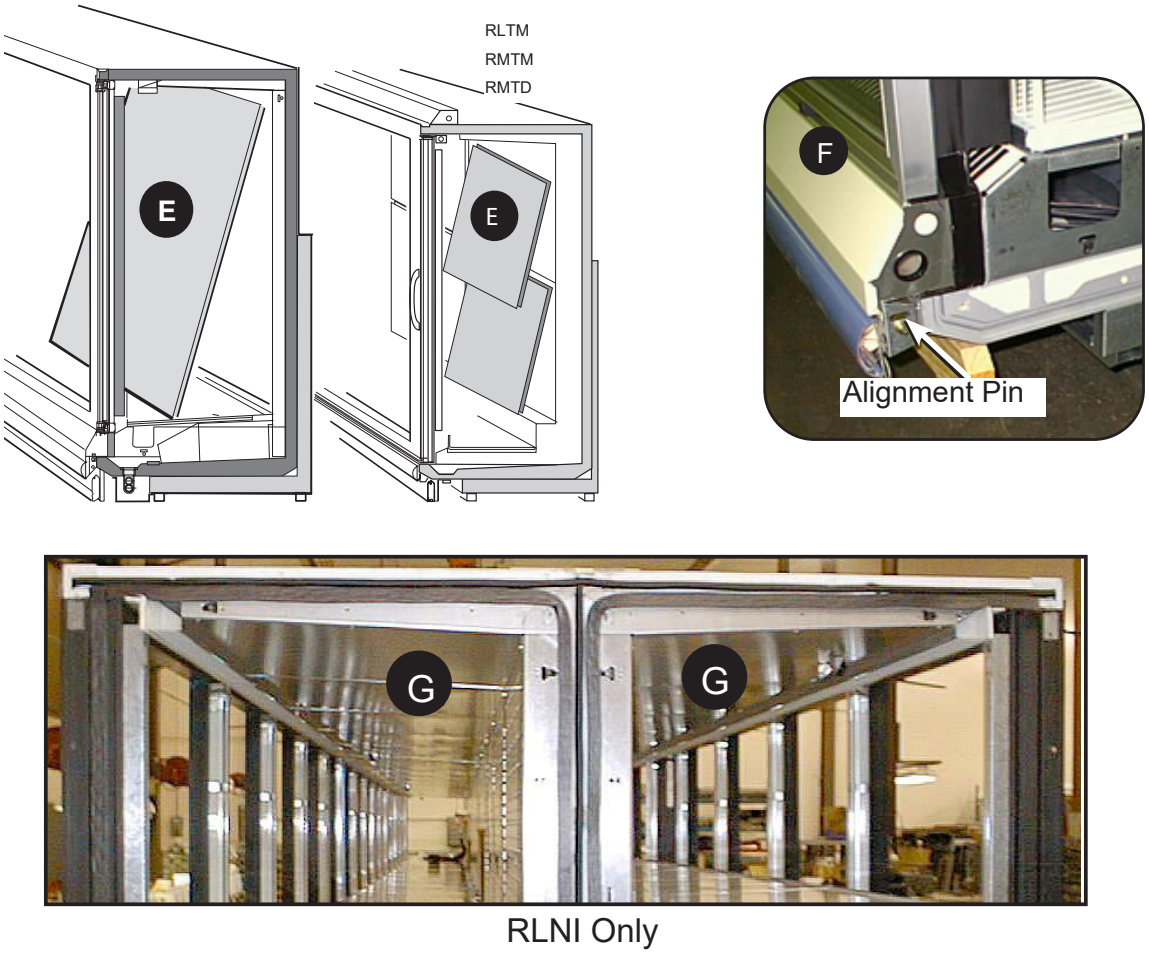

Figure 1. Remove items from case; align cases to be joined

Hussmann Corporation • Bridgeton, MO 63044-2483 U.S.A. • www.hussmann.com
U.S. & Canada 1-800-922-1919 • Mexico 800-890-2900

2. Locate and remove the shipping block in the center of the heat exchanger in the interior bottom of each case, see Figure 2. Snap a chalk line on the floor to use as a guide for positioning the front of the cases in the line-up. The front base frame should be on the chalk line.
3. Once cases are close to final placement, remove the shipping braces from the ends to be joined, see Figure 3. Discard bolts and flat washers used to hold shipping braces. Bolts are too long to be used for joining.

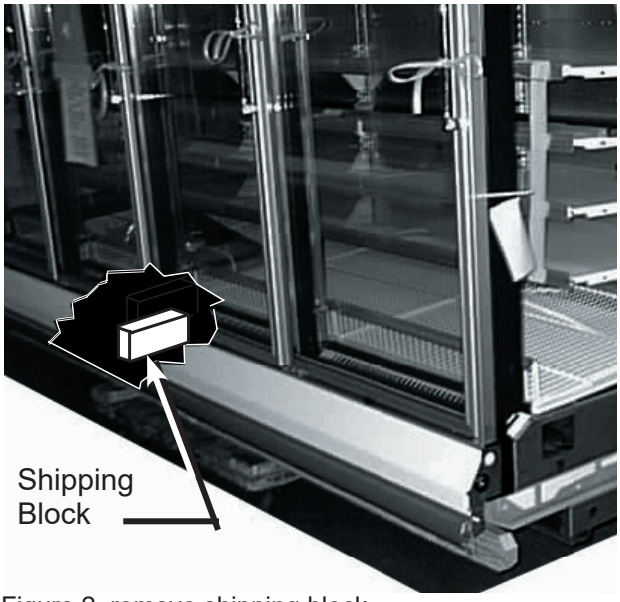

Figure 2. remove shipping block
(one from each side of island models)



Figure 3. Remove Shipping Braces

4. If not already installed make sure nut retainers and alignment pins are in place in the right end frame as shown in Figure 4A or 4B.

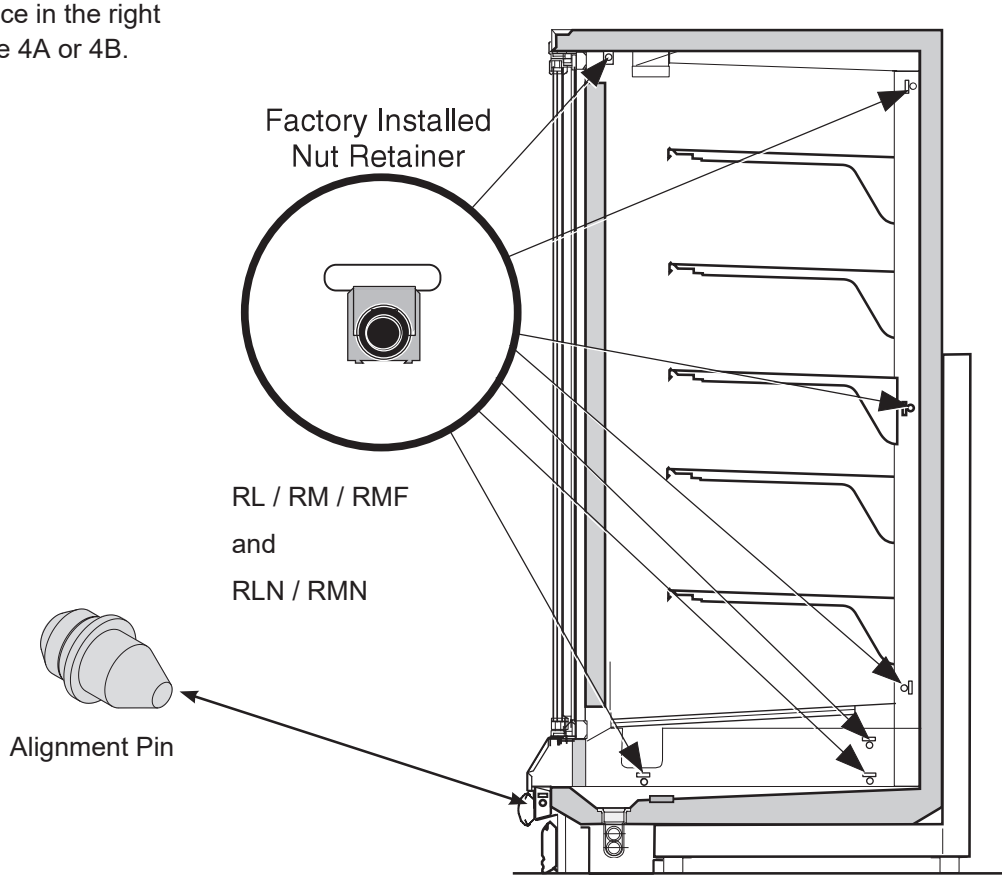

Figure 4A. verify nut retainer installation

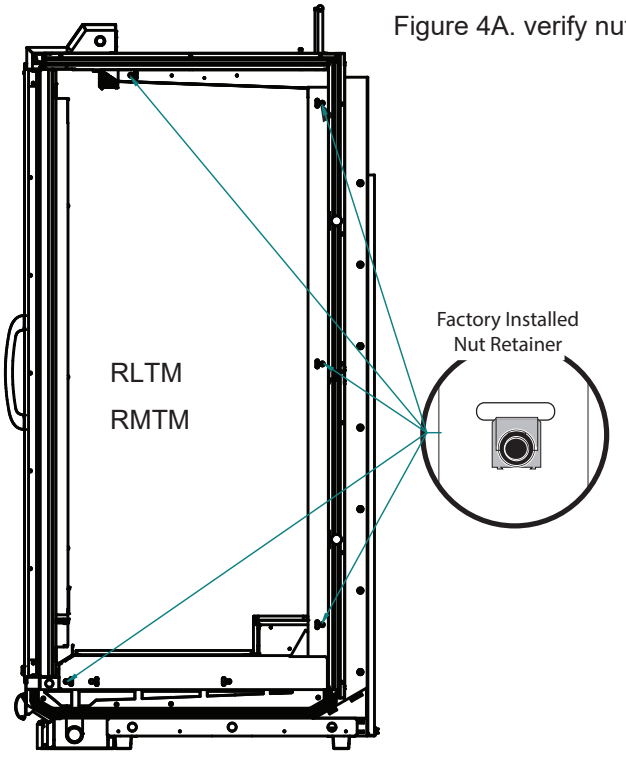

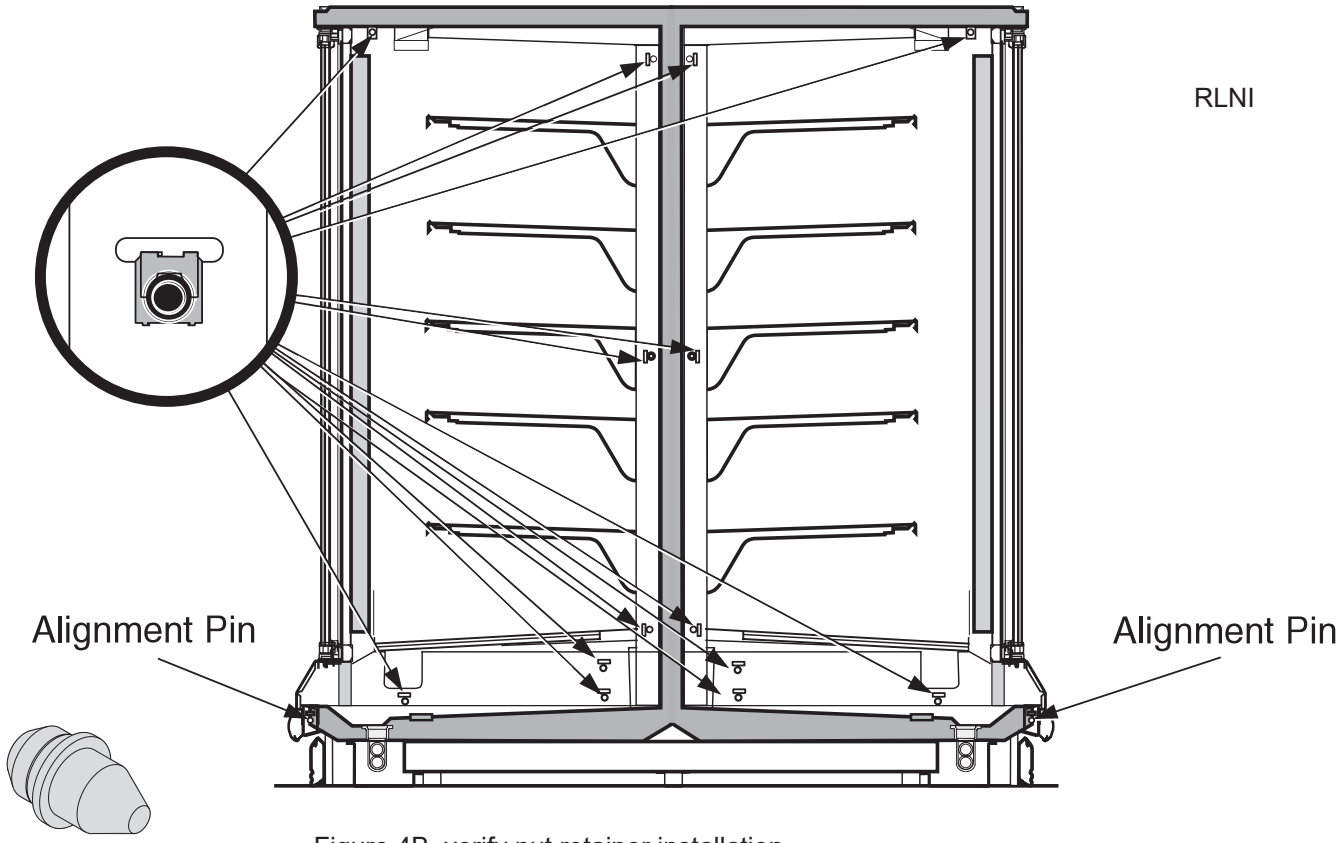

Figure 4B. verify nut retainer installation

5. Apply Donut Gasket (1) in recess around both left end as shown in Figure 5A, Part 1; 5B or 5C, Part 1, and right end frames as shown in Figure 5A, Part 2; 5B or 5C, Part 2. Apply the wider Foam Tape Gasket (2) around the right end frame as shown in Figure 5A, Part 2, 5B or 5C, Part 2.

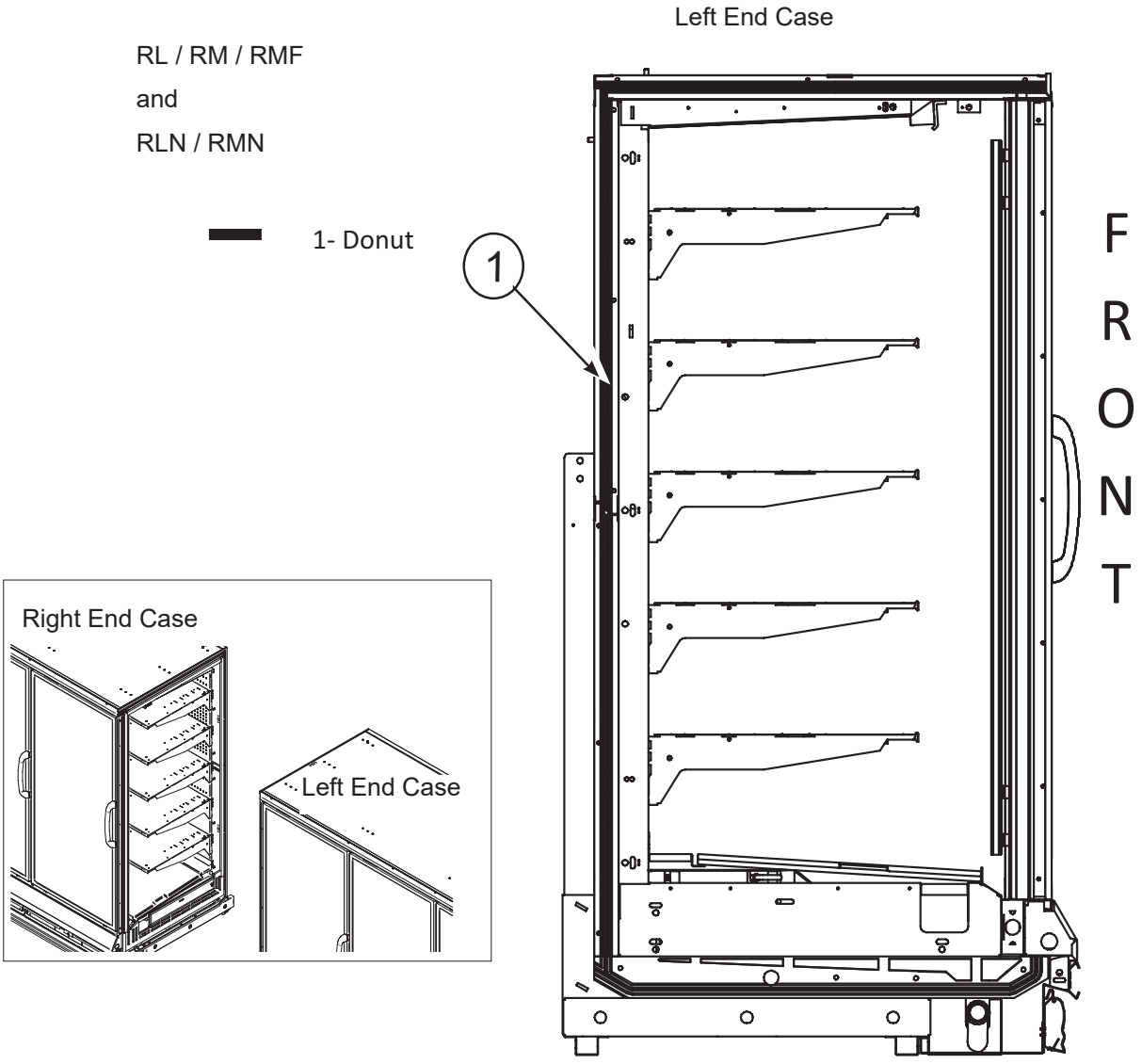

Figure 5A, Part 1. Apply Gasket to Left End of RL/RM/RMF and RLN/RMN

Hussmann Corporation • Bridgeton, MO 63044-2483 U.S.A. • www.hussmann.com
U.S. & Canada 1-800-922-1919 • Mexico 800-890-2900

Impact® Reach-In

Installation Information

- Apply gasket pad to right end first, then apply the narrower Foam Tape Gasket (3) around the perimeter of the right end frame outside of the donut gasket as shown in Figure 5A, Part 2, 5B or 5C, Part 2. Lap gaskets at lower corners.
- Check that there are no gaps between gasket and case.
- Do not stretch gasket, especially around corners.
  To make sharp corners, paper backing can be torn without removing from gasket.
- Do not butt gaskets; always lap joints.
- Remove paper backing after gasket is applied to keep gasket free of debris.
- Gasket has high tack adhesive and must be properly placed the first time.

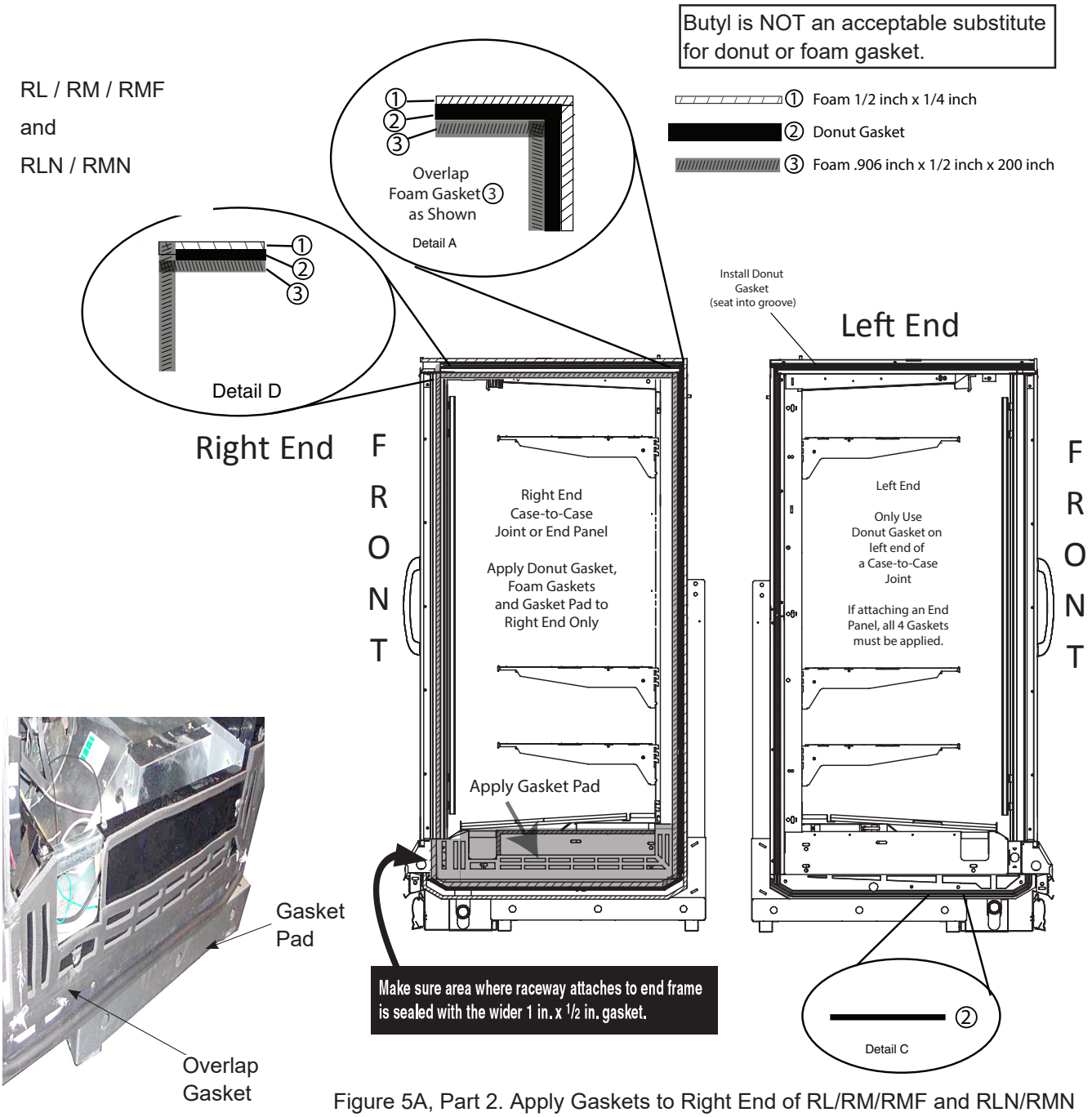

Figure 5A, Part 2. Apply Gaskets to Right End of RL/RM/RMF and RLN/RMN

Hussmann Corporation • Bridgeton, MO 63044-2483 U.S.A. • www.hussmann.com
U.S. & Canada 1-800-922-1919 • Mexico 800-890-2900

RLNI

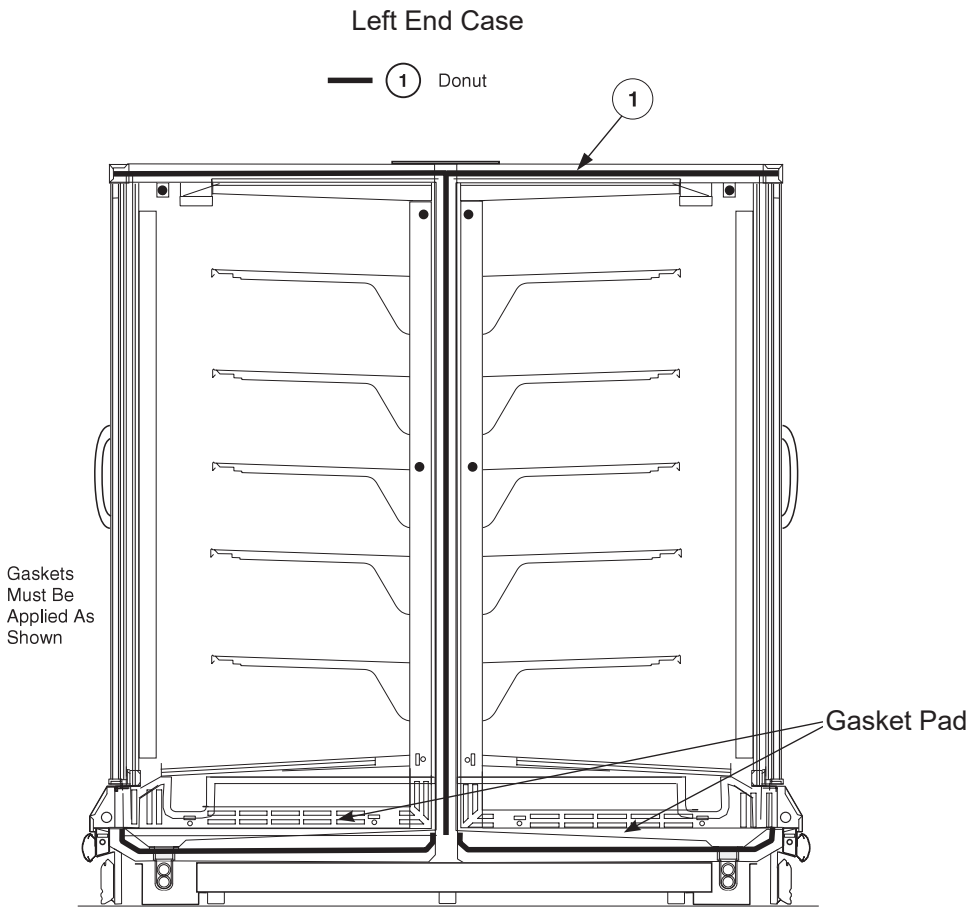

Figure 5A. Apply Gaskets to Left End of RLNI

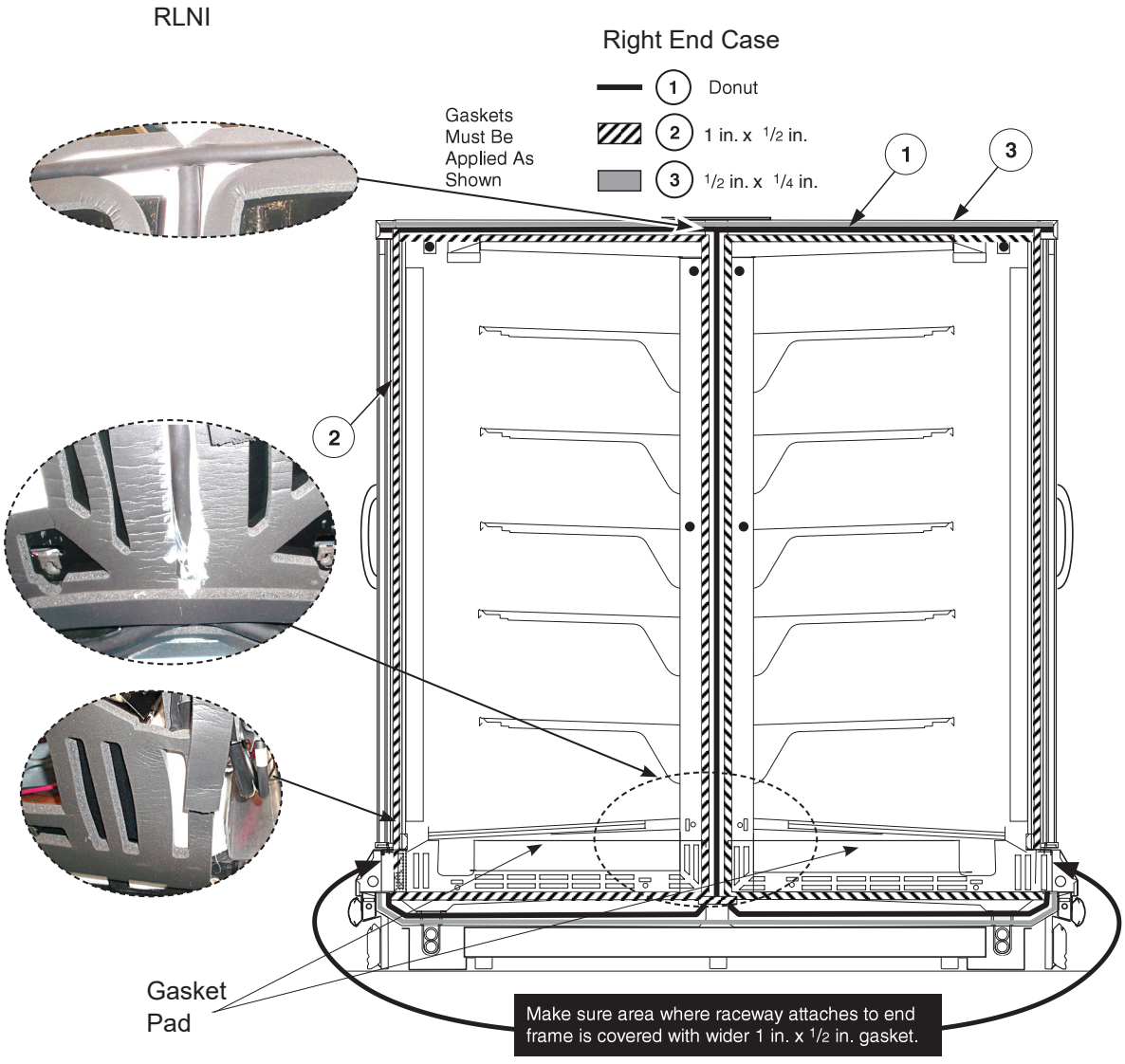

Figure 5B. Apply Gaskets to Right End of RLNI

Hussmann Corporation • Bridgeton, MO 63044-2483 U.S.A. • www.hussmann.com
U.S. & Canada 1-800-922-1919 • Mexico 800-890-2900

RLTM
RMTM
RMTD

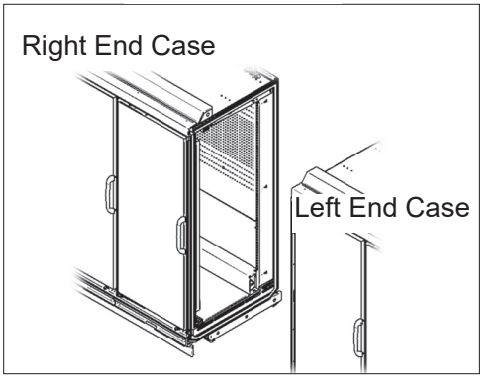

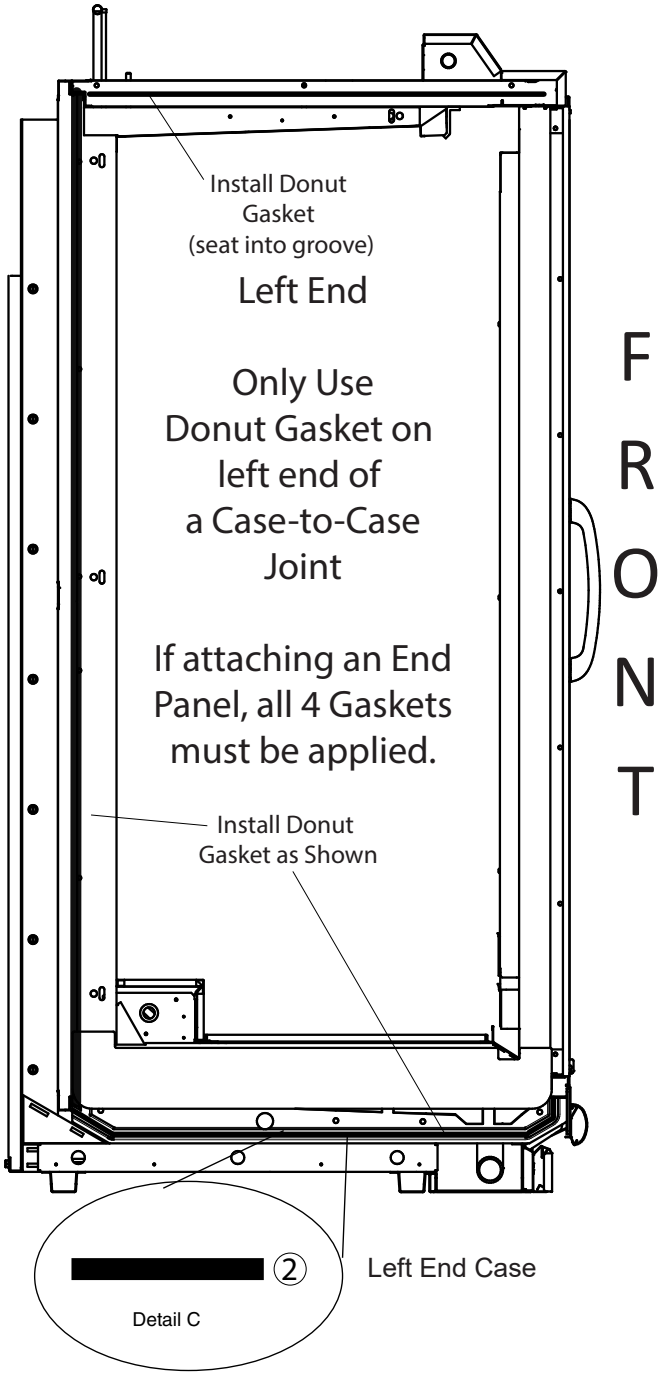

Hussmann Corporation • Bridgeton, MO 63044-2483 U.S.A. • www.hussmann.com
U.S. & Canada 1-800-922-1919 • Mexico 800-890-2900

6. Move the second merchandiser against first, mating alignment pins with corresponding holes. Use care when pushing the cases together. RL / RM / RLN / RMN / RLNI: Do not cut wires routed along the front bumper retainer. See detail in Figure 6. The RMTM / RLTM / RMTD has no alignment pin and the wireway is at the top front.

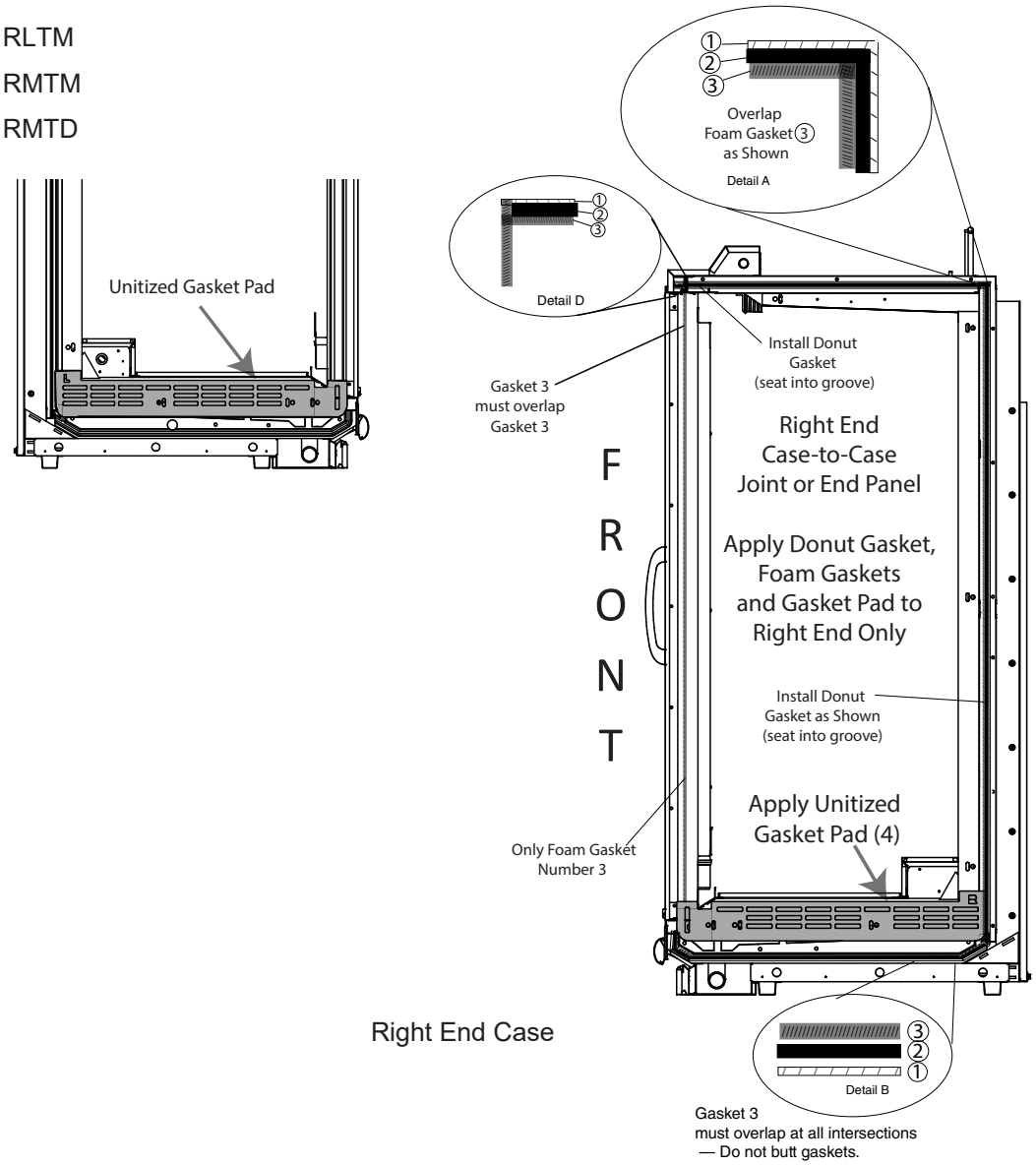

Right End Case

Figure 5C, Part 2. Apply Gasket to Right End of RLTM / RMTM / RMTD

Hussmann Corporation • Bridgeton, MO 63044-2483 U.S.A. • www.hussmann.com
U.S. & Canada 1-800-922-1919 • Mexico 800-890-2900

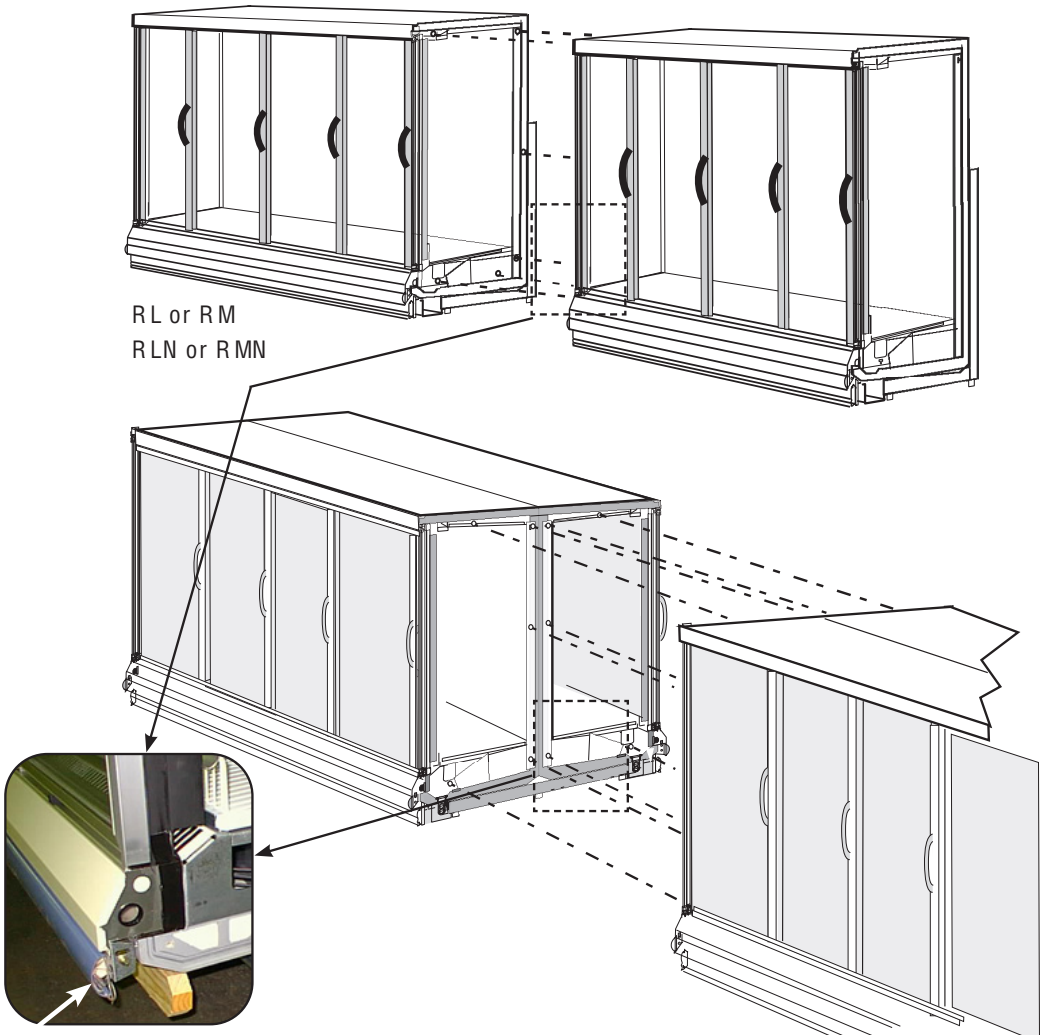

Figure 6. Move Cases Together

Hussmann Corporation • Bridgeton, MO 63044-2483 U.S.A. • www.hussmann.com
U.S. & Canada 1-800-922-1919 • Mexico 800-890-2900

7. Loosely insert Cap Screw (5) with Lock Washer (6) into each nut retainer following the sequence shown in Figures 7A and 7B.
   Do not tighten fully.
   a. Fasten bottom fronts together, but tighten only until front panels touch.
   b. Move to the bottom back position and join (2 places).
   c. Join at the top front position.
   d. Go to the middle back wall position and join.
   e. Join at the lower back wall.
   f. Finally, join at the top back wall position.

Following the same sequence, tighten each cap screw fully until the merchandisers are joined with a snug fit and gaskets are compressed.

When joining two RLNIE models, nut retainers and alignment pins are used on one case only.

8. Refer to Section 1 of the Reach-In Installation and Service Manual to install splashguard brackets and bumpers. Section 3 provides direction for installing splashguards, including splashguard Splice Connector (9) shown in Figure 9.

   Note that RLTM / RMTM cases have steel splashguards that do not use a splice connector.

RL, RM, RMF, RLN, RMN

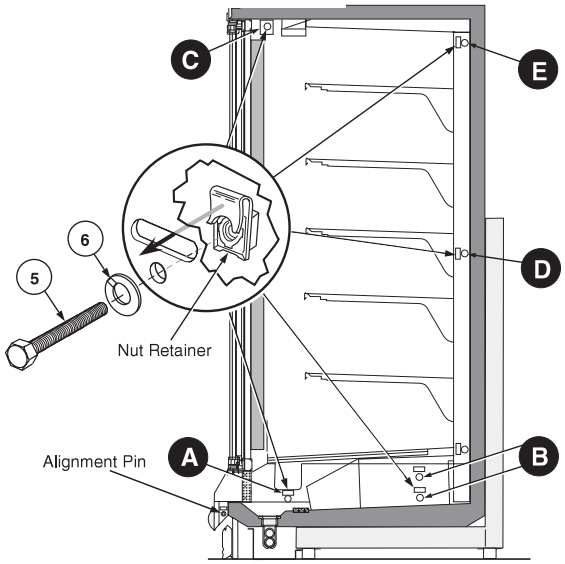

Figure 7A. Joining Sequence

RLTM / RMTM / RMTD

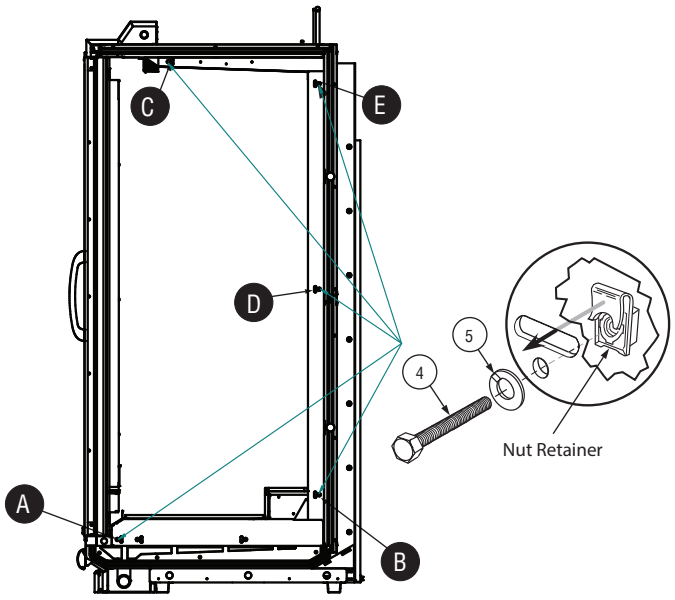

Figure 7B. Joining Sequence

Hussmann Corporation • Bridgeton, MO 63044-2483 U.S.A. • www.hussmann.com
U.S. & Canada 1-800-922-1919 • Mexico 800-890-2900

RLNI

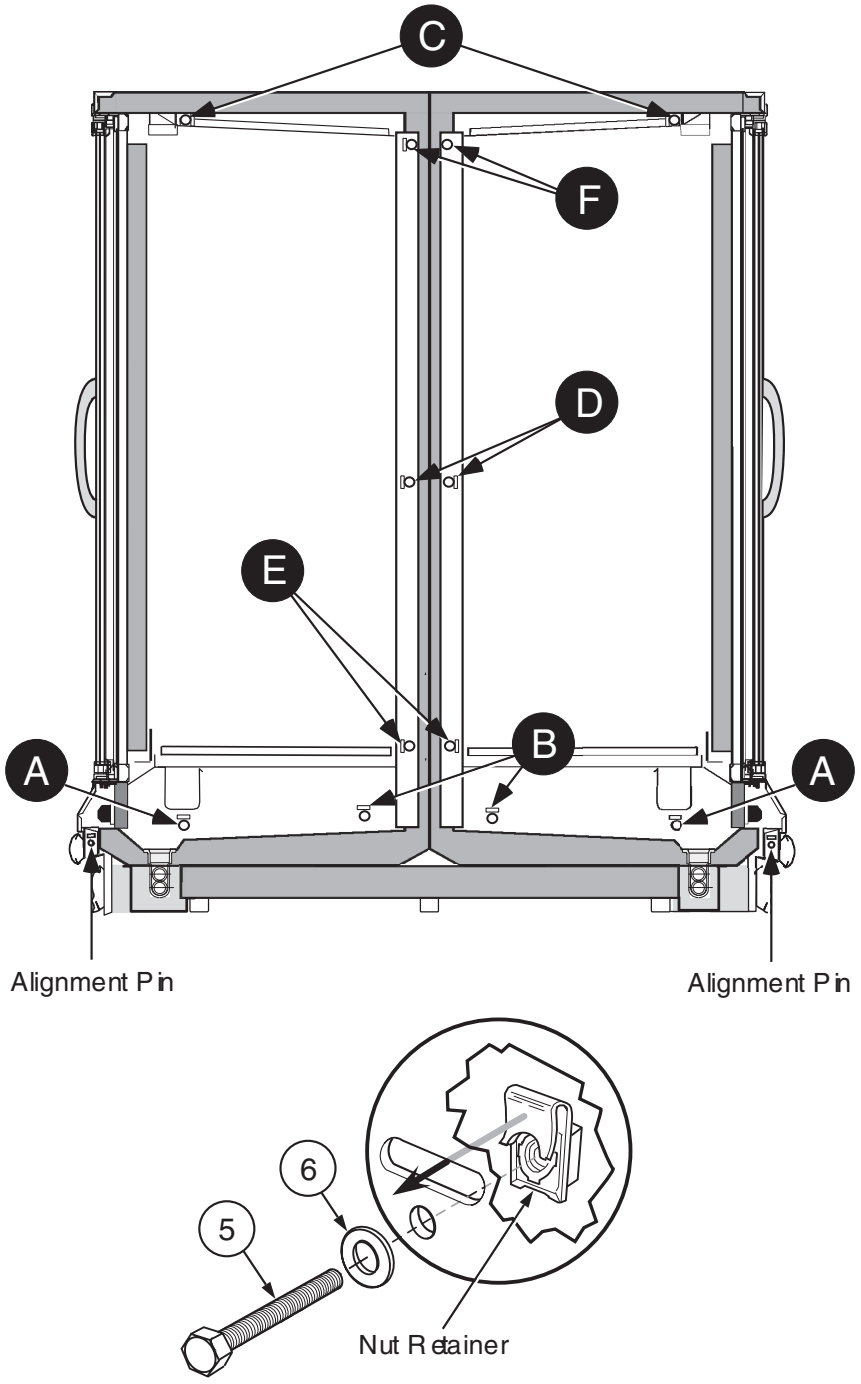

Figure 7C. Joining Sequence for RLNIM Cases

Hussmann Corporation • Bridgeton, MO 63044-2483 U.S.A. • www.hussmann.com
U.S. & Canada 1-800-922-1919 • Mexico 800-890-2900

9. Align holes in frame with holes in Joint Molding (6)
   Fasten cases together using Binder Post and Screws (7) as shown in Figure 8.

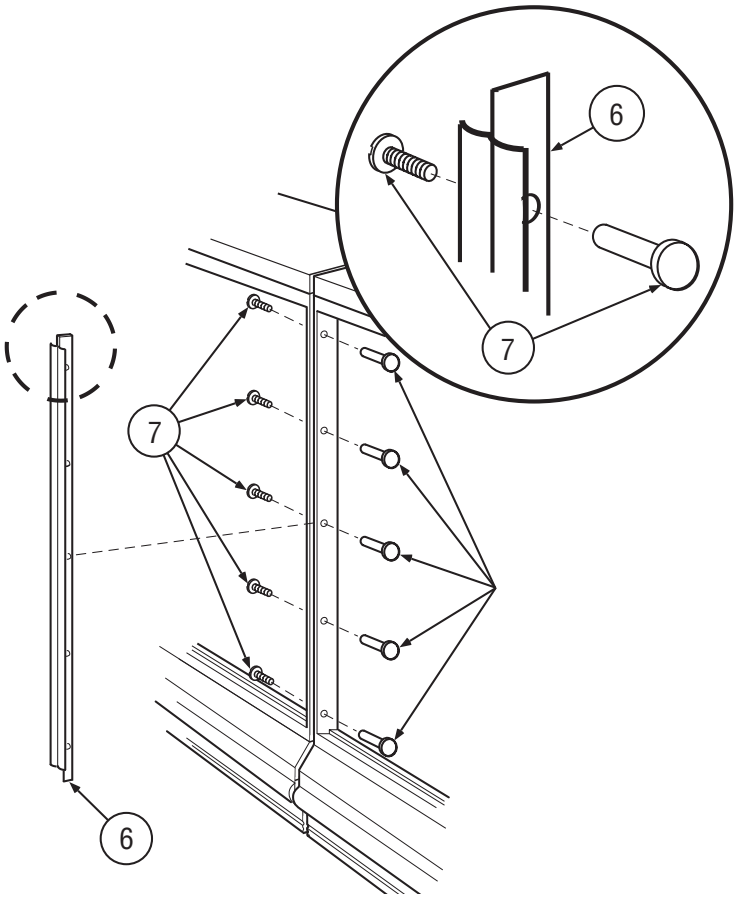

Figure 8. Installing “J” Molding

10. Splashguards, including splashguard Splice Connector (9) shown in Figure 9.

Note that RLTM cases have steel splashguards that do not use a splice connector.

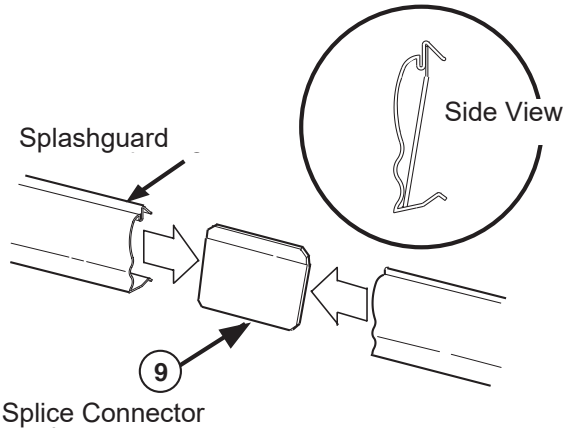

Figure 9. Installing Splashguard Splice Connector

Impact® Reach-In

Installation Information

Installing Splashguard Brackets (RL/ RLN)

1. Attach retainer splashguard RI to bracket support splashguard RL and RM using three screws

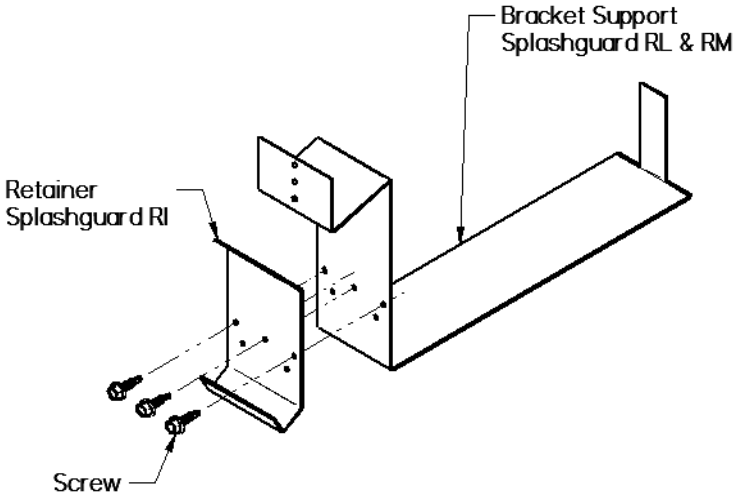

2. Install splashguard support brackets before piping case. The leveling brackets have a maximum extension of one (1) inch (25 mm) for uneven floors.

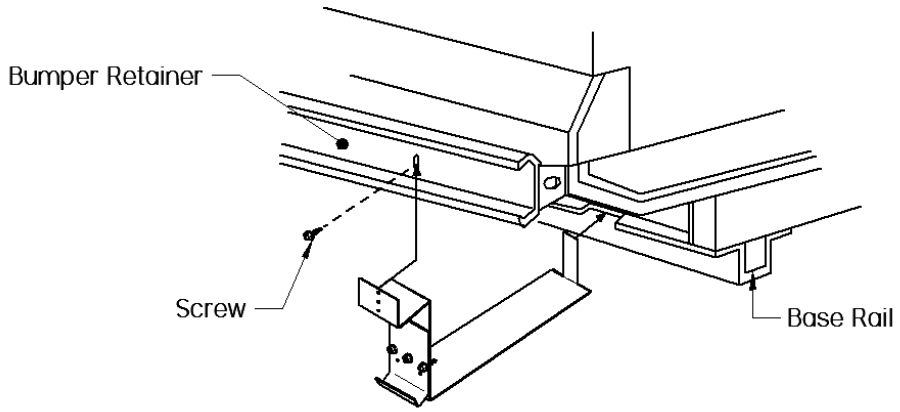

Do not place shims under splashguard brackets.

Hussmann Corporation • Bridgeton, MO 63044-2483 U.S.A. • www.hussmann.com
U.S. & Canada 1-800-922-1919 • Mexico 800-890-2900

Impact® Reach-In
Installation Information

Installing Splashguard Brackets

(RLTM Cases)

To install splashguards and brackets:

1. Slide the splashguard support bracket's small flange into base rail slots. Next, slide the splashguard retainer assembly under the case as shown.

2. Rotate the retainer assembly clockwise (from right hand side) while pulling towards the front of the case, until the forward most flange sits flush with the back of the color panel.

3. Align the retainer assembly with and attach to the support bracket using #10 screws. Then install a #8 screw through the color panel into the top retainer flange.

Do not place shims under splashguard brackets.



Splashguards Installation

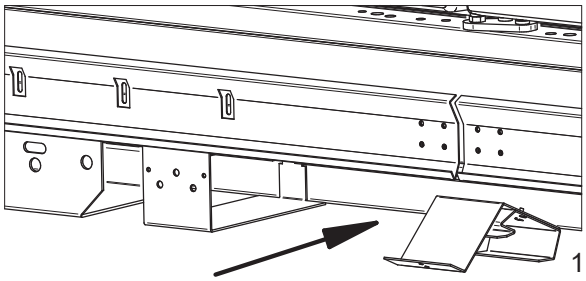

1.

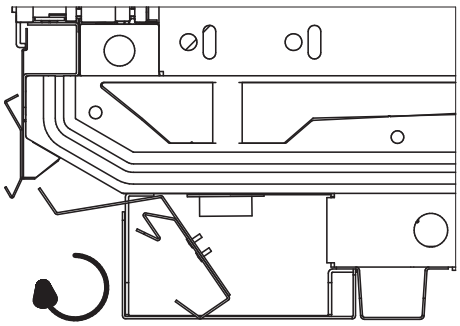

2.

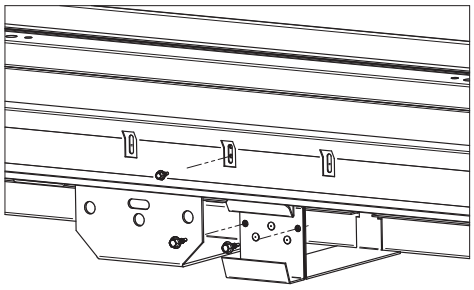

3.

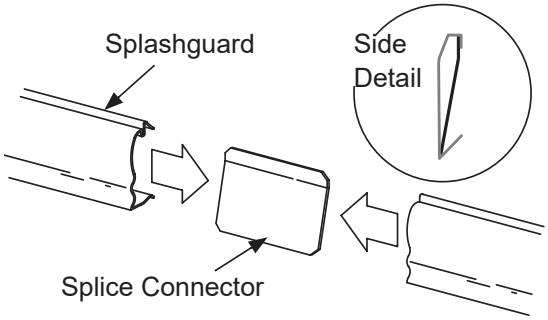

Impact® Reach-In

Installation Information

Piping Overview

Important: Since Hussmann has no direct control over the installation, providing freeze-burst protection is the responsibility of the installing contractor.

System design must conform to all local and national codes, laws, and regulations applying to the site of installation. In addition, the safety code for mechanical refrigeration (ASME B31.5) should be followed as a guide for installation and operation practice.

Refrigerant line sizes and piping techniques should be obtained from the ASHRAE guide or equivalent reference. Under no circumstances should the refrigerant connection size of the equipment be used as the basis for sizing the lines.

The horizontal suction line should slope away from the equipment toward the compressor. Vertical suction risers may require a trap at the bottom of the riser for proper oil return.

CO_2 Piping

Piping

Any piping material that meets all pressure and temperature ratings, material compatibility requirements and state and local building codes may be used for pumped liquid CO_2 applications. The design pressure of the system is labeled on the unit. Any connected components must meet the system design pressure (e.g., 1,305 psig [90 bar]).

Approved joining methods must be used for all piping and fittings to ensure the pipe's maximum pressure rating is maintained without reduction. The use roll-stop couplings for straight line pipe joints are recommended. Swaging of pipe joints is not recommended. Swaging weakens the copper at the swage point, reducing the maximum operating pressure rating.

CO_2 Piping Material

- Piping—minimum design pressure greater than system design pressure (e.g., 1,305 psig [90 bar])
- Fittings—Mueller Streamline XHP CuFe 1,885 psig (130 bar)
- Braze joints with alloy containing 15% silver (minimum)
  - -Flux materials must contain no zinc and must also be water soluble
  - -All field piping must be purged with nitrogen while brazing
- Schedule 40 carbon steel pipe or stainless-steel pipe
  - -Must protect exterior from corrosion

Insulation

Insulation should be used in secondary system piping to reduce the heat transfer to ambient air and to maintain subcooling in the CO_2 liquid supply line to the case. The insulation should be sized to allow for the worst-case conditions of heating from store lighting and ambient temperatures. Pipe should be insulated according to local codes and customer specifications and manufacturer specifications.

When installing piping that has not been pre-insulated, there are several options for insulation. Closed-cell elastomeric insulation is extremely popular in refrigeration applications. This type of insulation can also be used in secondary system applications.

The manufacturer's internal case piping valves and components are insulated to prevent frost from building. Sufficient insulation is required on piping into the display case to eliminate frost on tubes and to minimize temperature rise of CO_2.

Check Valves

Check valves are required wherever there is a possibility of trapping liquid CO2 between valves that may be shut off, including solenoid valves, service valves, and balancing valves. Check valves must be installed to vent high pressure CO2 back to the system. Hussmann recommends reverse return tubing instead of the use of shutoff valves for balancing purposes, but if shutoff valves are used, they must be relieved to the system through check valves.

WARNING—Trapping of liquid CO2 can result in extremely high pressure and must be avoided to prevent damage to equipment and personal injury.

Solenoid, check, ball valves, and ball valves with integrated pressure relief must be qualified for CO2 applications, with a minimum design pressure equal to or greater than the equipment design pressure (e.g., 1,305 psig [90 bar]).

Pumped Liquid R-744 (CO2) Supply Piping

For systems utilizing pumped liquid CO2, the liquid supply lines should be sized using the same guidelines as liquid lines. However, it is crucial to recognize that CO2-pumped liquid is more resistant to pressure drop than standard liquid lines. The CO2 pump introduces mechanical subcooling, enabling a higher pressure drop before the liquid begins to vaporize.

To ensure optimal performance, a system analysis is necessary to determine the maximum permissible pressure drop in both the supply and return lines. The combined pressure drop in the recirculation lines, the pressure drop across all system components, and any pressure changes due to elevation differences should not exceed the specified pressure differential rating of the pump.

Pumped Liquid R-744 (CO2) Return Piping

For systems utilizing pumped liquid CO2, the liquid return lines will carry a mixture of both liquid and vapor, with the exact ratio determined by the liquid overfeed rate. A system analysis must be conducted to identify the maximum permissible pressure drop in both the supply and return lines. The total pressure drop across the recirculation lines, all system components, and any changes in pressure due to elevation must not exceed the rated pressure differential of the pump.

It is essential to avoid over-sizing the liquid return riser lines. If the velocity becomes too low, liquid and vapor phases may separate, causing a significant increase in pressure drop as liquid accumulates in the vertical riser.

In pumped liquid CO2 systems, the liquid temperature typically falls below 30° F (-1.1° C). Therefore, it is essential to adequately insulate these lines to prevent condensation and minimize heat absorption. Failure to properly insulate liquid lines can reduce the cooling capacity, leading to suboptimal system performance.

Application data for display cases can be found at Hussmann.com

Additional Piping Installation Requirements

- Installation shall include protection from physical damage in operation and service and be in compliance with national and local codes and standards, such as ANSI/ASHRAE 15, IAPMO Uniform Mechanical Code, ICC International Mechanical Code, or CSA B52. All field joints shall be accessible for inspection prior to being covered or enclosed.
- The installation of pipework shall be kept to a minimum.
- A brazed, welded, or mechanical connection shall be made before opening the valves to permit refrigerant to flow between the refrigerating system parts.
- Mechanical connectors used indoors shall comply with ISO 14903 or UL 207 or CSA C22.2 No. 140.3. When mechanical connectors are reused indoors, sealing parts shall be renewed. When flared joints are reused indoors, the flare part shall be refabricated.
- Refrigerant tubing shall be protected or enclosed to avoid damage. Flexible refrigerant connectors (such as connecting lines between an indoor and outdoor unit) that might be displaced during normal operation shall be protected against mechanical damage.
- Mechanical connections shall be accessible for maintenance purposes.
- Provision shall be made for expansion and contraction of long runs of piping.
- Protection devices, piping, and fittings shall be protected as far as possible against adverse environmental effects, for example, the danger of water collecting and freezing in relief pipes or the accumulation of dirt and debris.
- Piping in refrigeration systems shall be so designed and installed to minimize the likelihood of hydraulic shock damaging the system.
- Steel pipes and components shall be protected against corrosion with a rustproof coating before applying any insulation.
- Flexible pipe elements shall be protected against mechanical damage, excessive stress by torsion, or other forces, and they should be checked for mechanical damage annually.
- Precautions shall be taken to avoid excessive vibration or pulsation of the refrigerant piping.
- Look for the room area label on the equipment to identify the minimum room size. The information in this manual can also be used as an estimate. Always confirm the exact value on the equipment before installation.
- After completion of field piping for split systems, the field pipework shall be pressure tested with an inert gas and then vacuum tested prior to refrigerant charging, according to the following requirements as detailed by UL safety standard. Pressures may come from equipment data label or from customer specification.

1. The minimum test pressure for the low side of the system shall be the low side design pressure and the minimum test pressure for the high side of the system shall be the high side design pressure, unless the high side of the system cannot be isolated from the low side of the system in which case the entire system shall be pressure tested to the low side design pressure.
2. The test pressure after removal of the pressure source shall be maintained for at least 1 hour with no decrease of pressure indicated by the test gauge, with rest gauge resolution not exceeding 5% of the test pressure.
3. During the evacuation test, after achieving a vacuum level specified in the manual or less, the refrigeration system shall be isolated from the vacuum pump and the pressure shall not rise above 1500 microns within 10 min.

- Field-made refrigerant joints indoors shall be tightness tested according to applicable codes and requirements. The test method shall have a sensitivity of 0.18 oz (5 g) per year of refrigerant or better under a pressure of at least 0.25 times the maximum allowable pressure. No leak shall be detected.
- Equipment piping in the occupied space shall be installed in such a way to protect against accidental damage in operation and service.
- Any solenoid valves shall be correctly positioned in the piping to avoid hydraulic shock or pressure.
- Insulation shall be suitable for use with the material being insulated.
- The indoor equipment and pipes shall be securely mounted and guarded such that accidental rupture of equipment cannot occur from such events as moving furniture or reconstruction activities.

Line Connection Sizes

Consult the unit datasheet or contact a Hussmann representative for unit-specific line size inquiries.

Waste Outlet/Drain Line

All information about waste/drain setup required to install and ensure proper function.

Refrigerant Piping

Standard Connection Location

When brazing pipes, always use the insulation blanket shipped with the merchandiser to protect the plastic case bottom from heat damage. The refrigerant line connections are located at the right-hand end of the merchandiser—this is the end opposite the main serial label, beneath the display pans. A sticker marks the exact location of the connection point.

To exit the cases, the installer must saw a hole. Each case ships with a refrigeration shroud, which must be positioned correctly before making any connections. Place the shroud over the refrigeration piping so that when it is rotated into place, it will be in the upright position. Refer to Figure 2-1 for proper orientation.

Take care not to burn, scorch, or overheat the shroud during brazing. After completing the connections, apply silicone sealant to the bottom of the shroud as shown in Figure 2-2. Then, rotate and center the shroud over the refrigeration outlet foam pad, as illustrated in Figure 2-3.

Seal this outlet thoroughly. Seal both the inside and the outside. We recommend using an expanding polyurethane foam insulation. Cover foam with silicone to prevent water from entering foam.

Figure 2-1

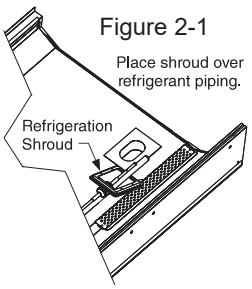

Figure 2-2

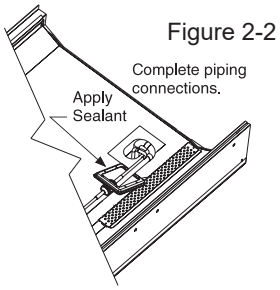

Figure 2-3

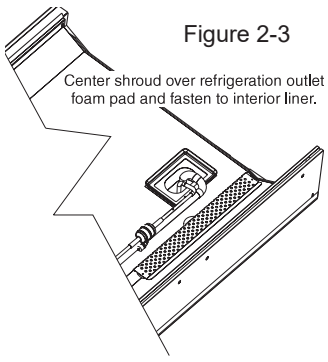

A2L Piping Connection Locations

A2L cases are piped to the outside of the case. Refrigerant piping connections for reach-in models are located on top of the case.

RLN5 model shown with doors and end panels removed for clarity. Other reach-in models have similar A2L piping locations.

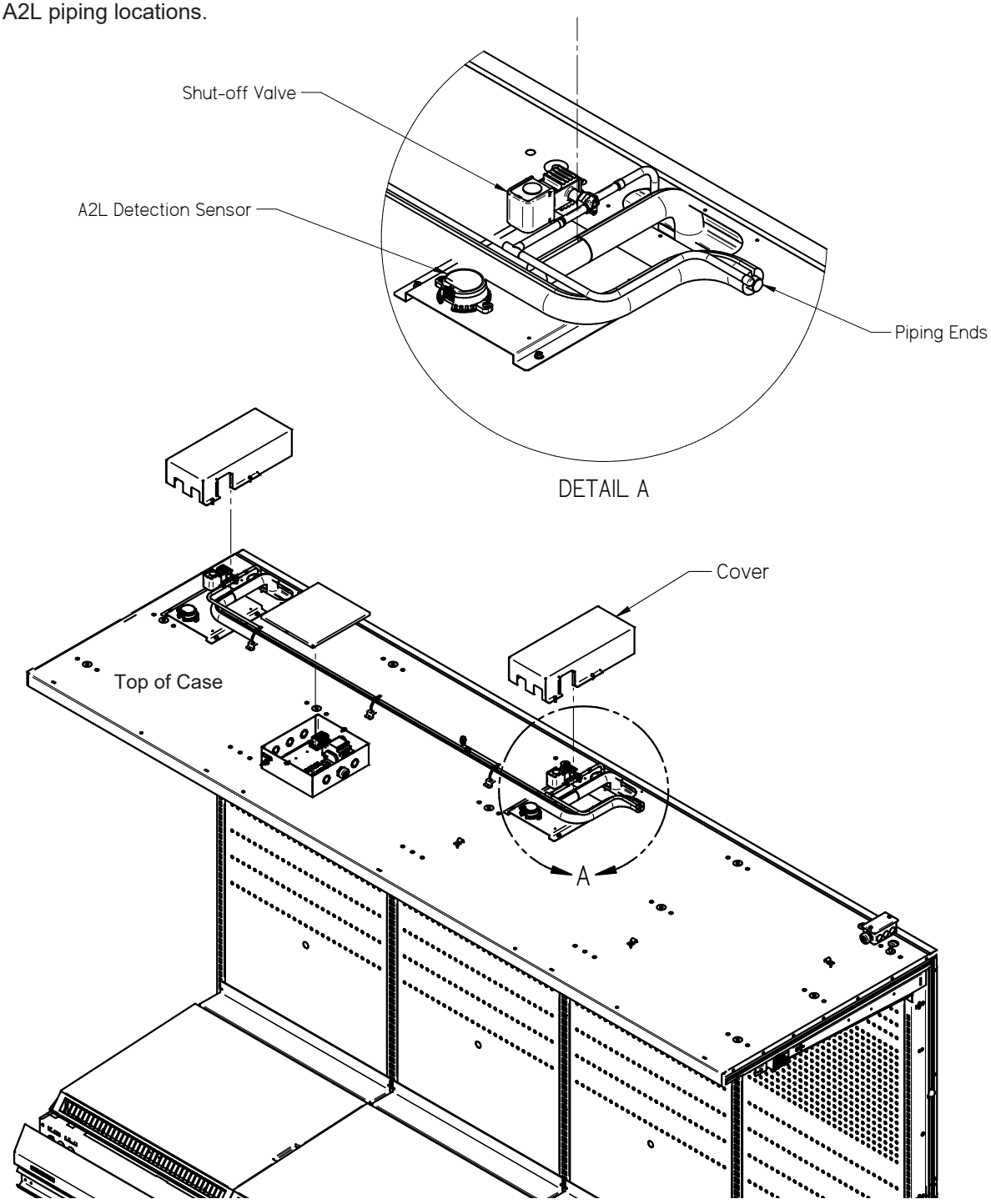

Hussmann Corporation • Bridgeton, MO 63044-2483 U.S.A. • www.hussmann.com
U.S. & Canada 1-800-922-1919 • Mexico 800-890-2900

Optional Internal Top Piping Connections

A shroud should be used to seal outside pipe penetrations at the top of the merchandiser. Position the shroud over the case piping before making the final connection.

Once all connections are made and insulation has been applied to the piping, run a bead of sealant around the bottom of the shroud. Put the shroud into position and attach with six screws. In the event the shroud was not placed over the piping prior to final connection, the shroud can be cut (carefully) and then installed with adhesive holding the shroud in place on top of the merchandiser.

After connections have been made, seal this outlet thoroughly. Seal both the inside and the outside. We recommend using an expanding polyurethane foam insulation. Cover foam with silicone to ensure seal around insulation and to prevent deterioration of foam.

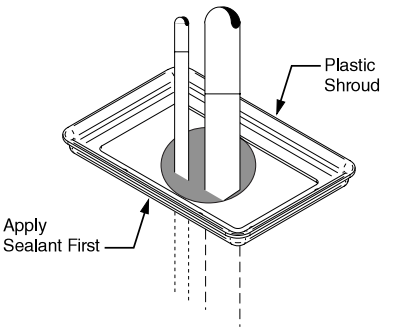

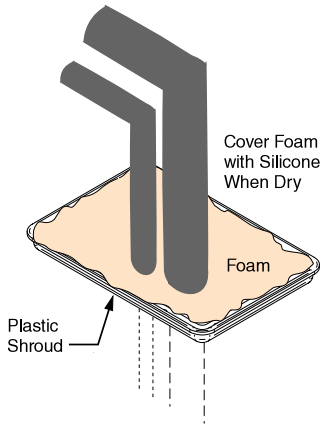

Multiplexing

Piping of merchandisers operating on the same refrigeration system may be run from merchandiser to merchandiser through the end frame saddles provided for this purpose. Do NOT run refrigerant lines through merchandisers that are NOT on the same refrigeration system as this may result in poor refrigeration control and compressor failure.

Note: If Gas defrost is used, the liquid line will need to be increased two sizes larger inside the merchandiser area. This is necessary to ensure even liquid drainage from all evaporators during defrost.

Line Sizing: Refrigerant lines should be sized as shown on the refrigeration legend that is furnished for the store or according to ASHRAE guidelines.

Oil Traps: P-traps (oil traps) must be installed at the base of all suction line vertical risers.

Pressure Drop: Pressure drop can rob the system of capacity. To keep the pressure drop to a minimum, keep the refrigerant line run as short as possible using a minimum number of elbows. Where elbows are required, use long radius elbows only.

Insulation

With GAS Defrost

The suction and liquid lines should not contact each other and should be insulated separately for a minimum of 30 ft (9.1 m) from the merchandiser.

With Other Than Gas Defrost

The suction and liquid lines should be clamped or taped together and insulated for a minimum of 30 ft (9.1 m) from the merchandiser.

With All Defrost

Additional insulation for the balance of the liquid and suction lines is recommended wherever condensation drippage is objectionable or the lines are exposed to ambient conditions.

Branch Line Piping

The following information is applicable only for piping Hussmann merchandisers to Hussmann refrigeration equipment.

Suction Line—All Defrosts

- Pitch in direction of flow.
- May be reduced by one size at one third of case run load and again after the second third. Do NOT reduce below evaporator connection size.
- Suction returns from evaporators enter at the top of the branch line.

Liquid Line—Off-time and Electric Defrost

- May be reduced by one size after one half the case load run. Do not reduce below evaporator connection size.
- Take-offs to evaporators exit the bottom of the liquid line. Provide an expansion loop for each evaporator take-off (minimum 3 in. [76 mm] diameter).

Liquid Line—Koolgas Defrost

Maximum of 6 evaporators per Branch System.

Increase the liquid line size inside the case by two sizes over the branch size.

Branch Size	In Case Size
1/2”	7/8”
5/8”	1 1/8”
7/8”	1 3/8”
1 1/8”	1 5/8”
1 3/8”	2 1/8”

- Take-offs to evaporators exit the bottom of the liquid line. Provide an expansion loop for each evaporator take-off (minimum 3 in. (76 mm) diameter).

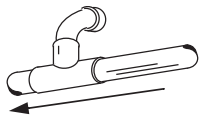

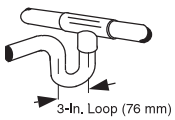

Liquid Line Take Off

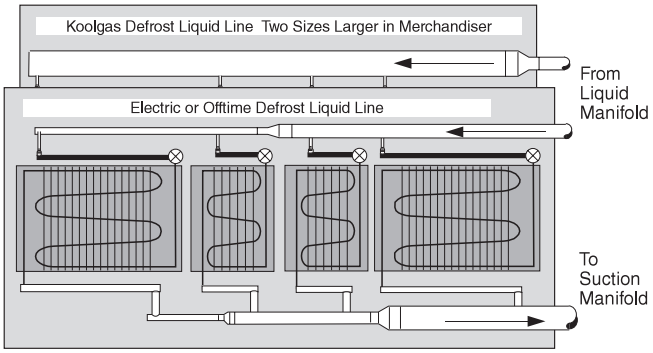

Waste Outlet/Drain Line

The waste outlet location varies for each of the 1, 2, 3, 4, and 5-door merchandisers. Drip piping is located between the front merchandiser base and the splashguard fixture and runs parallel to the merchandiser (see datasheet for exact locations).

Installing Drip Piping

Poorly or improperly installed drip pipes can seriously interfere with the merchandiser's operation and result in costly maintenance and product losses. Please follow the recommendations listed below when installing drip pipes to ensure proper installation. Drip piping must be installed before piping merchandiser.

- Never use drip piping smaller than the nominal diameter of the pipe or drain trap supplied with the merchandiser.
- When connecting drip piping, the water seal must be used as part of the drip piping to prevent air leakage or insect entrance. Never use two water seals in series in any one drip pipe. Double water seals in series will cause an air lock and prevent draining.
- Pitch the drip piping in the direction of flow. There should be a minimum pitch of 1/4 in. per ft (20 mm per 1 m).
- Avoid long runs of drip piping. Long runs make it impossible to provide the pitch necessary for good drainage.
- Provide a suitable air break between flood rim of the floor drain and outlet of drip pipe. An alternative is to cut the last section of drip pipe at an angle.
- Prevent drip pipes from freezing sweating or freezing:
  a. Do NOT install drip pipes in contact with uninsulated suction lines. Suction lines should be insulated with a non-absorbent insulation material.
  b. Where drip pipes are located in dead air spaces, such as between merchandisers or between a merchandiser and a store wall, provide means to prevent drip pipe from sweating. External ventilation fans may be required to prevent sweating.



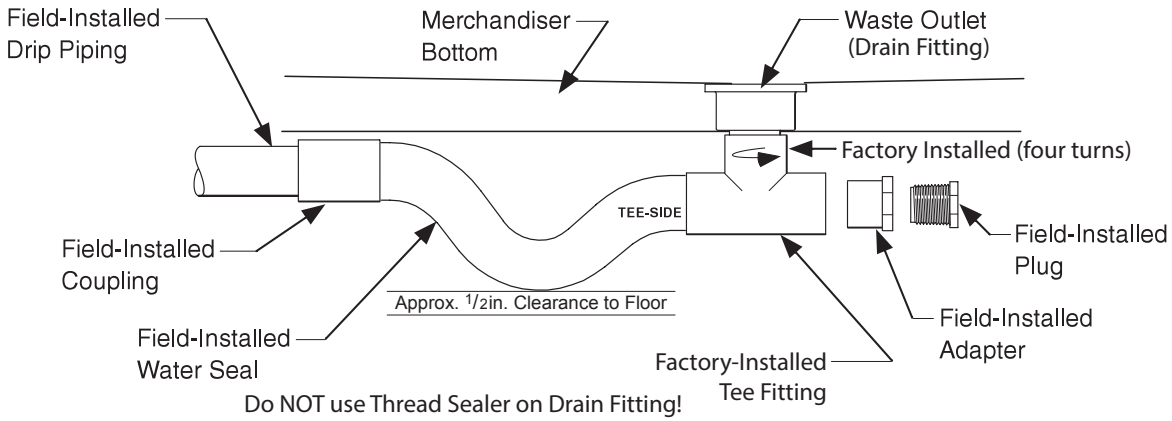

Impact® Reach-In
Installation Information

Drain Trap

1. Tee is factory-installed. Do not overtighten threads, or the drain fitting or tee may become damaged.
2. Do NOT use thread sealer on ABS drain fitting. If sealer is used the ABS drain fitting may crack or leak! (If a tee needs to be installed it should be tightened no more than 4 turns.) Do not overtighten threads.
3. Dry fit the supplied water seal / trap to ensure approximately 1/2 in. (13 mm) of clearance from the bottom of the trap to the floor as shown.
4. Install remaining PVC drain parts using recommended PVC cleaner, primer and cement per manufacturer's recommendations.
5. Thread plug into the adapter until snug but not to exceed four full rotations.
6. Installed drip piping may require additional support depending on the number and location of the hub floor drains. The installer should always provide adequate support to all drip piping arrangements to prevent excess stress on all drip piping components. The installer must provide additional support when "evac" type waste water systems are applied.

Note: It may be necessary to rotate water seal (trap) inside the tee a few degrees to ensure clearance at two locations. There must be clearance 1) between the bottom of the water seal and the floor, and 2) between the top of the water seal outlet and the bottom of the merchandiser. Do not over-rotate or gravity seal may be compromised. Always rotate trap bottom toward merchandiser support rail. It is the installing contractor's responsibility to consult local agencies for local code requirements.

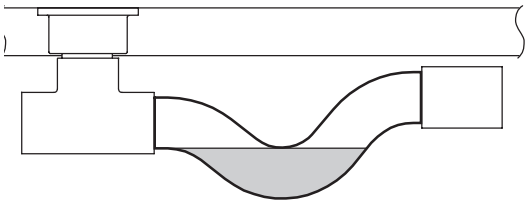

Water Seal
Correct

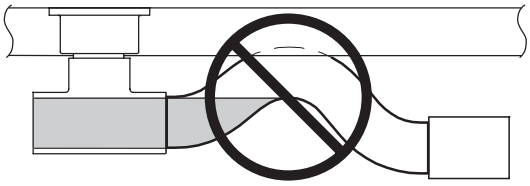

Water Seal
NOT Correct

Hussmann Corporation • Bridgeton, MO 63044-2483 U.S.A. • www.hussmann.com
U.S. & Canada 1-800-922-1919 • Mexico 800-890-2900

Impact® Reach-In
Installation Information

Drip Piping Lineup Arrangements

The following illustrations below show typical arrangements for installing drip pipes for a lineup of merchandisers. Illustrations are for reference only. Piping may vary with location and access to hub drain(s). Each merchandiser waste outlet must be individually piped to a hub drain if 1/4 in. (6.35 mm) drip piping pitch cannot be maintained.

Note: No more than two merchandiser are to be piped per water seal. Do not install water seal between two merchandiser waste outlets that are piped together. (Double water seals in series will cause an air lock and prevent drainage.)

RL, RLN Single Line Up (4 merchandisers shown)

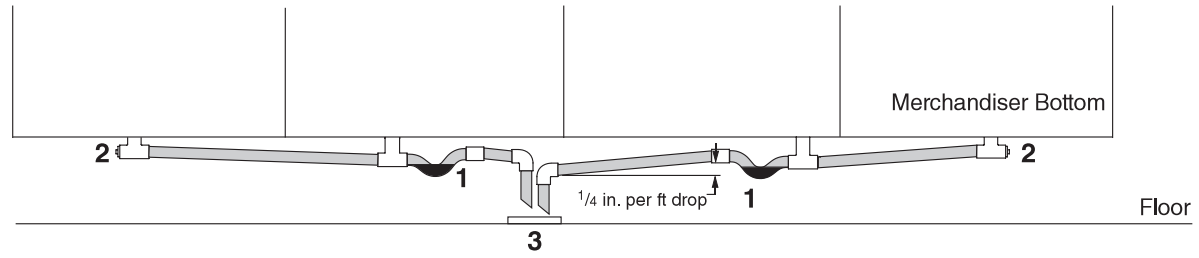

RL, RLN Single Line Up (4 merchandisers shown)

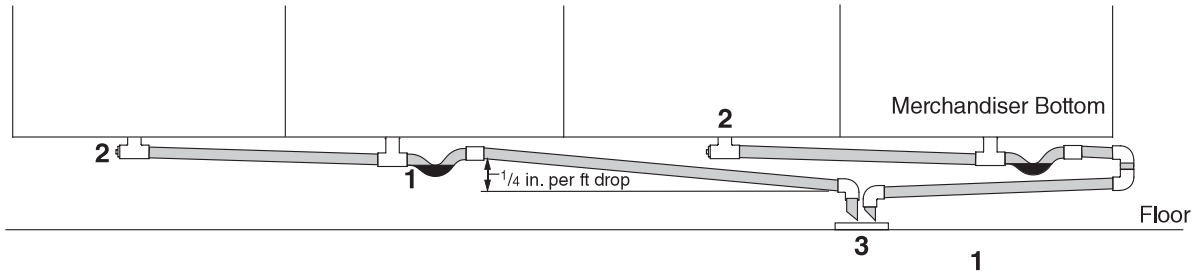

RLNIM Cross Drip Piping (4 merchandisers shown)

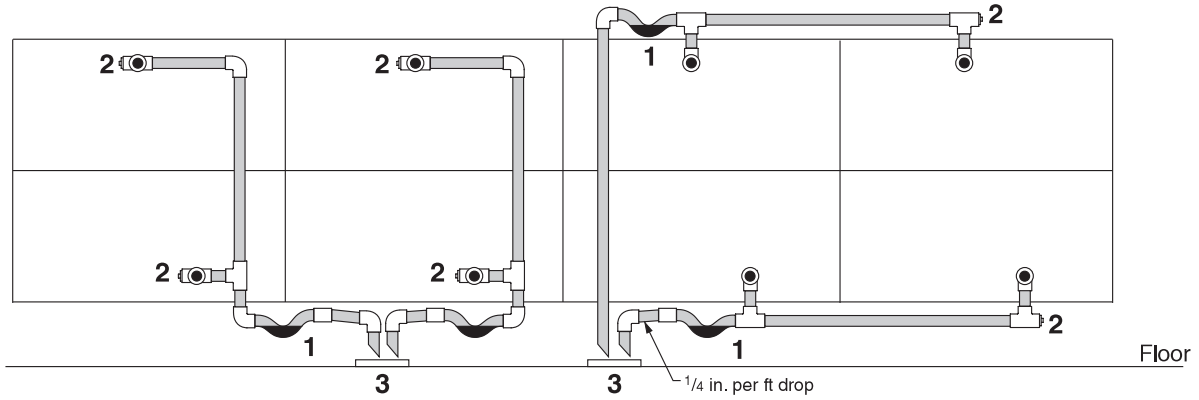

1 = Water Seal **2** = Clean Out Plug **3** = Hub Drain

Hussmann Corporation • Bridgeton, MO 63044-2483 U.S.A. • www.hussmann.com
U.S. & Canada 1-800-922-1919 • Mexico 800-890-2900

Impact® Reach-In
Installation Information

Electrical Information

Electrical field wiring connects at the terminal block located in the raceway. Electrical requirements vary by case model. Refer to the technical data sheet for more information. Refer to the serial label located on the interior top panel of the cabinet to determine MCA and MOPD and to verify input voltage before making any electrical connections.

Merchandisers require dedicated electrical circuit(s) with ground. Consult equipment datasheet or equipment serial label for additional electrical specifications. Always use a dedicated circuit with the amperage stated on the equipment. Where components of multiple units are required to be wired to a single circuit, ensure that the load is distributed properly and proper disconnect locations are used. Do not overload the circuit.

It is necessary to allow for disconnection of the appliance from the supply power after installation. Disconnect power from the main disconnect before servicing the display cases.

If in doubt, consult an electrician.

Field Wiring

Components are wired as completely as possible at the factory with all work completed in accordance with the National Electrical Code (NEC). All deviations required by governing electric codes will be the responsibility of the installer. All wiring must be in compliance with governing electrical codes.

Field wiring must be sized for component amperes stamped on the serial label. Actual ampere draw may be less than specified. When multiple display cases are on the same defrost circuit, the defrost termination thermostats are wired in series.

WARNING: Always check the serial label for component amperes.

Based on the full load amps of the system, select the largest connectible wire size (based on no more than three wires in the wireway and 86° F (30° C) environment per NEC).

Electrical Connections

All wiring must be in compliance with NEC and local codes. All electrical connections are to be made at a terminal block, in the electrical wireway, or in a handy box.

Identification of Field Wiring

Leads for all electrical circuits are identified by colored plastic bands. These bands correspond to the color code sticker (shown below) located inside the merchandiser wireway. Terminal block is not for case-to-case connection.

WIRING COLOR CODE

Leads for all electrical circuits are identified by a colored plastic band: neutral wire for each circuit has either White insulation or a White plastic sleeve in addition to the color band.

Pink ..... Refrig. Thermostat Low Temp.	Orange or
Light Blue ... Refrig. Thermostat Norm Temp.	Tan ..... Lights
Dark Blue ... Defrost Term. Thermostat	Maroon ..... Receptacles
Purple ..... Condensate Heaters	Yellow* ..... Defrost Heaters 120V
Brown..... Fan Motors	Red* ..... Defrost Heaters 208V
Green* ..... Ground	

*Either colored sleeve or colored insulation

Electrician's note: Use copper conductor wire only.

- Case must be grounded.
- These are marker colors wires may vary.

Hussmann Corporation • Bridgeton, MO 63044-2483 U.S.A. • www.hussmann.com
U.S. & Canada 1-800-922-1919 • Mexico 800-890-2900

Lighting

Reach-in cases feature pre-installed mounted vertical LED mullion lighting. Refer to the equipment datasheet for wiring diagrams related to standard and optional lighting and door case manuals. Cases with Innovator doors use manual part number 0425683, and cases with EcoVision doors use case manual 3008521.

Refrigerant Charging Procedure

Only the specified refrigerant type can be used.

The triple evacuation method should be used to achieve a leak-free, dry system. For the first evacuation, the system should be pulled down to 1,000 microns. The second evacuation should be pulled to 500 microns. The final evacuation should be pulled down to at least 300 microns. A dry, leak-free system is when the system holds a vacuum of 300 microns for 24 hours with the vacuum pump de-energized and valved off. Between each evacuation, break the vacuum with dry nitrogen.

When connecting hoses between the refrigeration system, manifold gauges, and refrigerant cylinder, ensure that the connections are secure and there are no potential sources of ignition nearby. Ensure that contamination of different refrigerants does not occur when using charging equipment.

Use dedicated hoses to service the type of refrigeration system being serviced (e.g., R-454C equipment for an R-454C system). Hoses or lines should be as short as possible to minimize the amount of refrigerant contained in them.

Ensure that the refrigeration system is properly grounded prior to charging the system with refrigerant, to avoid the potential for static build-up.

In addition to conventional charging procedures, the following requirements shall be followed:

a. Ensure that contamination of different refrigerants does not occur when using charging equipment. Hoses or lines shall be as short as possible to minimize the amount of refrigerant contained in them.
b. Cylinders shall be kept in an appropriate position according to the instructions.
c. Ensure that the REFRIGERATING SYSTEM is earthed prior to charging the system with refrigerant.
d. Label the system when charging is complete (if not already).
e. Extreme care shall be taken not to overfill the REFRIGERATING SYSTEM.

Prior to recharging the system, it shall be pressure-tested with the appropriate purging gas. The system shall be leak-tested on completion of charging but prior to commissioning. A follow up leak test shall be carried out prior to leaving the site.

Extreme care must be taken not to overfill the refrigeration system. After charging, carefully disconnect the hoses, attempting to minimize the quantity of refrigerant released. Further leak check the service ports, hoses, refrigerant tanks. Original service port washer and cap must be reinstalled to prevent refrigerant leaks. Cap must be tightened to 12–14 in-lb (1.4–1.6 nm) torque.

Refrigerant Charge Label

After charging is complete, note the refrigerant type and charge amount using permanent marking on the refrigerant charge label affixed to the unit.

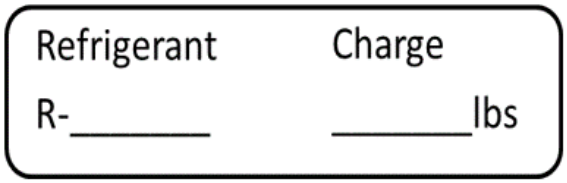

Pumped Liquid R-744 (CO_2) Start-Up Checklist

1. When the system(s) are ready for commissioning. Visually check all components. Check pressure and vacuum sheets complete. See Report #1A and #1B later in the document.
2. Load and check the controller's program and verify all Inputs and Outputs.
3. Main power available. Check for three-phase at sub-board. Connections tight on board. Compressors isolated. Check all cabinets (fans) clear of rubbish and that all electrical grounds have continuity and electrical tests have been completed by electrician.
4. Turn on power and check operation of cabinet and room fans, lights trim, heaters, door heaters, defrost heaters, drain heaters and all isolating switches. Start crank case heaters to warm oil.
5. Check individual breakers / fuse to prove circuits of all safety switches on refrigeration system, (HP/LP, oil failure). Compressor and condenser overloads for correct operation and set points, oil heaters and oil levels. All valves fully open. See Report #2 later in the document.
6. Start primary side compressors individually and check for correct three phase power and current draw. Charge up primary system. Open hot gas bypass lines to impose a load on the primary system during initial startup. Shut off hot gas bypass lines after system is charged.
7. Charge R-744 (CO_2) vessel initially with VAPOR until pressure is above 100 PSIG (6.9 bar), then continue charging with liquid. Charge with liquid until high liquid level sensor in the receiver senses liquid.
   Note: Only one liquid CO_2 Pump may run at any given time. Shut off either the supply or return ball valve to the pump that is not in use. Dual pump operation—alternating pumps is not recommended by the pump manufacturer.
8. Start the liquid CO_2 pump. Then commence branch cooling in a staged basis of one branch at a time taking care to ensure that the CO_2 vessel pressure does not rise above 400 PSIG (27.6 bar)—do not rush this initial start-up stage, and do not run the CO_2 system until the high side system is fully operational.
   Note: Do not open all solenoid valves at once. Run high side plant and check (adjust if necessary) superheats and operation of interstage heat exchanger.
9. Check cabinet and room temp setting, including cut in and cut out operation. Confirm the operation of the CO_2 leak detectors and alarm system.
   Note: CO_2 leak detectors are to be located in every cooler room, freezer room, food preparation area, plant room and the retail area (as required by code).
10. Check defrost (and current draw on elements) operation and safety termination for each individual branch.
11. Check oil temps / pressures and high pressure / low pressure, pressures, and settings.
12. Check and record running amperages of compressors and condensers. Check moisture indicator.
13. Check and record operational amperages of all electrical loads (i.e., fans, lights, anti-sweat heaters, defrost heaters, etc.)
14. Turn off plant and recheck all electrical terminals for tightness or signs of overheating.
15. Check alarm system operation and settings.
16. After 100 hours of running on the primary system change: drier cores, suction filter cores, lubricant, and replace oil filters / strainers on the secondary system change: liquid line and dryer cores
17. Note: Maintenance requires these drier cores be replaced whenever the system is opened or at a minimum of every six months.
18. Leak test system and re-check electrical terminals. Re-check cabinet and room temp settings; including cut in and cut out operation.
19. Full training and the onsite Instruction Manual are to be provided by the refrigeration contractor to the employer's key (nominated) onsite store staff prior to the store opening date. This must include detailed safety training with particular attention to CO_2.

Pumped Liquid R-744 (CO_2) Operation

Sequence of Operation

This section describes the general operation of the R-744 liquid recirculation secondary systems. These systems are designed to be used in conjunction with a centralized parallel compressor rack system. The R-744 liquid recirculation system regulates case temperatures by circulating carbon dioxide through a case evaporator as it absorbs heat. The returning carbon dioxide is cooled to a liquid by the primary refrigerant supplied from the rack. The carbon dioxide is then pumped back through the case evaporator.

When the secondary system control circuit is powered up (120 volts) the chiller controller is powered. This controller regulates superheat on the primary side and must be programmed before starting the refrigeration system.

Turn on the main on/off switch to energize the pump. One pump will be “ON,” and one pump will be “OFF” as a backup pump. The pump that is “ON” will now run continuously. The R-744 receiver pressure and temperature is controlled by stepping the primary rack compressor capacity.

The rack stages compressors on and off based on the input from R-744 receiver pressure transducer. The EEV controller will regulate the superheat on the primary refrigerant side.

Defrost is initiated when the rack controller sends a signal to de-energize a case solenoid valve. The solenoid valve closes, and after a specified time delay, electric heat is switched on. Once the defrost period has elapsed, the electric heat is switched off. After a second time delay, the solenoid valve is energized. The R-744 (CO_2) refrigerant then resumes flow through the case.

Commissioning Checklist: https://www.hussmann.com/ns/Supplemental_IO/GD_Pumped_Liquid_R-744_CO2_Commissioning_Checklist_M001264.pdf

CO_2 Temperature Control

The CO_2 temperature is controlled by using the CO_2 receiver pressure as the reference point for the primary side compressor capacity.

Read CO_2 Receiver Pressure Control

Pressure Rise

IF
CO_2 receiver pressure rises 2 PSIG (0.1 bar) above the saturation pressure for the selected CO_2 setpoint temperature,

THEN
Rack controller increases the primary-side compressor capacity until the set point temperature CO_2 saturation pressure is reached.

Pressure Drop

IF
CO_2 receiver pressure falls 2 PSIG (0.1 bar) below the saturation pressure for the selected CO_2 setpoint temperature,

THEN
Rack controller decreases the primary-side compressor capacity until the set point temperature

Shutdown Modes

Low Pump Differential Pressure (PSIG [bar])

The rack controller (e.g., Copeland E3) monitors the discharge and suction pressure across the CO_2 pump that is "ON" and calculates the differential pressure using a flex combiner.

There will be dual pumps operating in parallel. One pump will be "ON" running continuously, and one pump will be "OFF" as a backup. There is a switch on the control panel to switch between Pump 1 or Pump 2. The two pumps will have different sets of discharge and suction pressure transducers.

Operation when pressure is in range:

IF
the differential pressure (psi [bar]) across the pump is greater than 5 psi (0.3 bar) or less than 60 psi (4.1 bar),

THEN
Rack controller sends output to turn the pump ON.

Operation when pressure is out of range:

IF
the differential pressure (psi [bar]) across the pump drops below 5 psi (0.3 bar) for a period of 10 seconds,

OR

IF
the differential pressure (psi [bar]) across the pump rises above 60 psi (4.1 bar) for a period of 10 seconds,

THEN
Rack controller sends output to turn the pump OFF. Rack controller sends alarm to identify "LOW PUMP DIFFERENTIAL PRESSURE SHUT DOWN." After a 2-minute time delay, Rack controller sends output to turn the pump ON.

Multiple Restart and Lockout Procedure

IF
2nd shutdown is within 15 minutes,

THEN
re-start after time delay of 2 minutes.

IF
3rd shutdown is within 15 minutes,

THEN
re-start after time delay of 2 minutes.

IF
4th shutdown within 15 minutes,

THEN
lockout and require an inspection by service technician.

Thermostatic Expansion Valve (TXV) Adjustment

Expansion valves must be adjusted to fully feed the evaporator. Before attempting to adjust valves, make sure the evaporator is either clear or only lightly covered with frost, and that the merchandiser is within 10° F (6.5° C) of its expected operating temperature. Adjust valves as follows:

Method 1 (recommended): Attach a sensing probe (either thermocouple of thermistor) to the evaporator outlet, under the clamp holding the expansion valve bulb. Attach a pressure probe to the access valve on the suction line. Measure superheat by subtracting the saturation temperature at the measured pressure from the measured outlet temperature.

Method 2: Attach two sensing probes.
Attach two sensing probes (either thermocouple or thermistor) to the evaporator. Position one under the clamp holding the expansion valve bulb; securely tape the other to the coil inlet line. Some “hunting” of the expansion valve is normal. The valve should be adjusted so that during the hunting the greatest difference between the two probes is 3°–5° F (1.7°–2.8° C). With this adjustment, during a portion of the hunting the temperature difference between the probes will be less than 3° F (1.7° C) and at times 0. Make adjustments of no more than 1/4 turn for Balanced Port TEV and 1/2 turn at a time for other valve models. Wait at least 15 minutes before rechecking the probe temperature or making further adjustments.

Note: When using high glide refrigerants (e.g., R-407A, R-448A), use the evaporator pressure and subtract the dew point from the coil outlet refrigerant temperature to measure the superheat level.

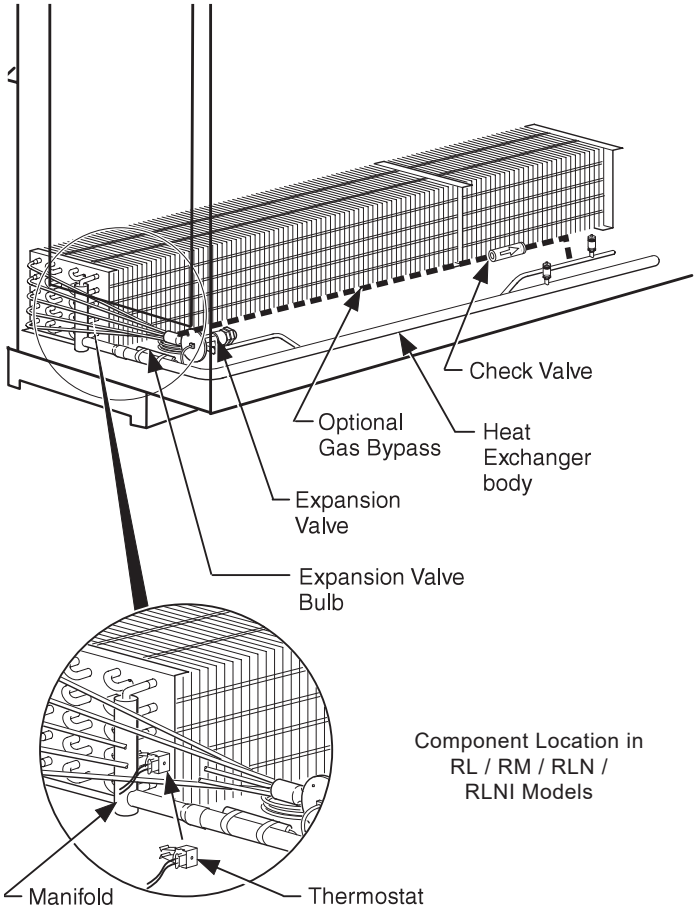

Component Location in
RL / RM / RLN /
RLNI Models

Refrigeration Thermostat

The thermostat body is located in the electrical raceway near the right-hand end of the merchandiser. Its sensing bulb is located behind the right end interior back panel.

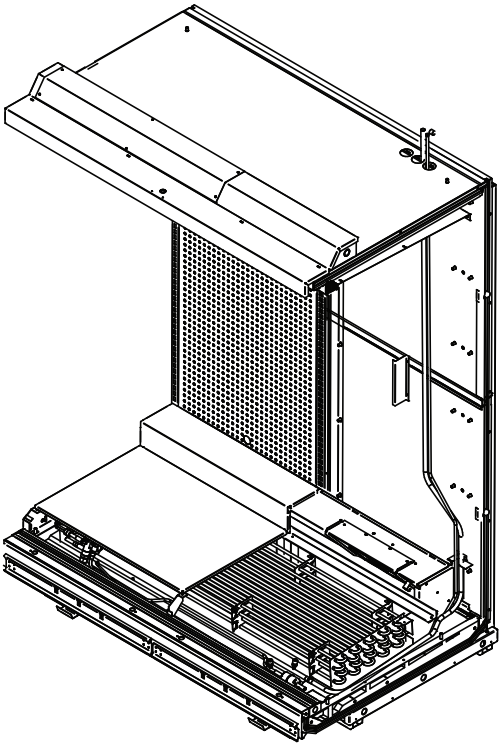

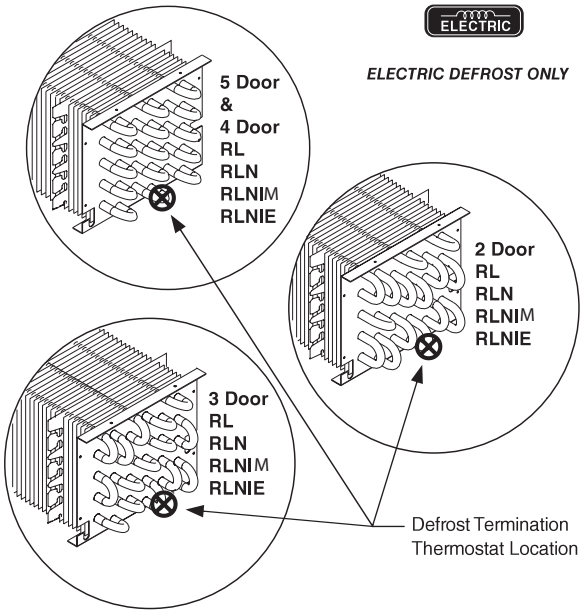

(Right end of Case)

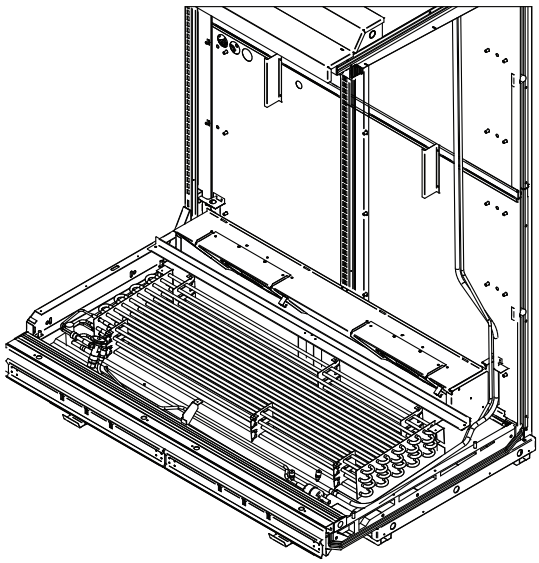

3, 4 & 5 Door RLTM

2 Door RLTM

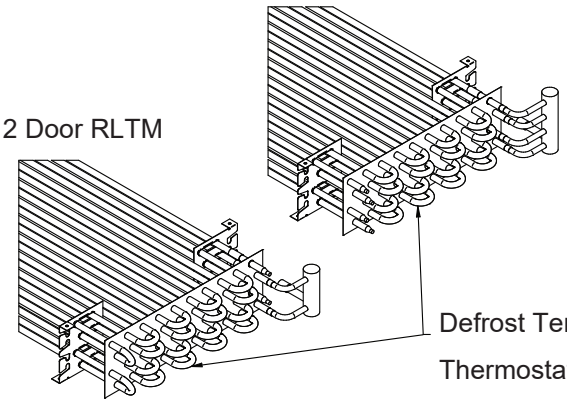

(Left end of Case)

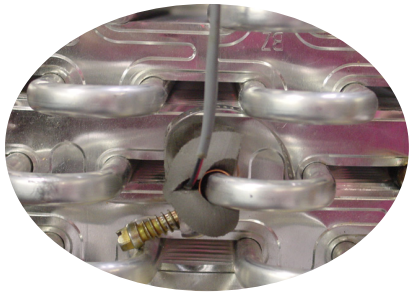

Defrost Termination Thermostat

The standard disc type defrost termination thermostat is not adjustable. On low-temperature merchandisers, the defrost termination thermostat or optional termination sensor is located on the right end of the coil at the bottom center return bend. If an optional adjustable thermostat is used, the bulb will be clamped to the suction line on the left end of the merchandiser.

Control Settings

Control Settings Medium Temperature

- Conventional Single Compressor: Measure Discharge Air Temperature at the center of the case at the discharge honeycomb.
- Merchandiser temperature must be controlled by a thermostat or other device with a 3°–6° F (1.7°–3.3° C) differential. It will be wired to control the compressor motor contactor.
- Standard Off Time defrost is time terminated. On outdoor units the defrost timer will control a liquid line solenoid beginning a defrost pumpdown 4 minutes before defrost.

The defrost frequency and lengths listed may require adjustment for specific store conditions.
Factors include:

a. Store temperature and humidity
b. Low head pressure
c. Long refrigerant line runs
d. Seasonal changes
e. Merchandiser temperature lower than recommended
f. When practical, defrost when store is closed.

Low pressure control settings are applicable to outdoor condensing units where ambient does not fall below 0° F.

Control Settings Low Temperature

- Conventional Single Compressor: Measure Discharge Air Temperature at the center of the case at the discharge honeycomb.
- Merchandiser temperature must be controlled by a thermostat or other device with a 3–6° F (1.7°–3.3° C) differential. It will be wired to control the compressor motor contactor.
- Standard electric defrost is temperature terminated. The defrost termination thermostats for all the merchandisers on one compressor are wired in series. Failsafe must not control defrost cycle length, especially when less than 208 VAC power supply is used for defrost heaters, or if frost build up is heavy from shopping demands.
- On outdoor units the defrost timer will control a liquid line solenoid beginning a defrost pumpdown 4 minutes before defrost.

Optional Gas defrost is time terminated and has fan cycling thermostat. The defrost frequency and lengths listed may require adjustment for specific store conditions. Low pressure control settings are applicable to outdoor condensing units where ambient does not fall below 0° F.
Factors include:

a. Store temperature and humidity
b. Low head pressure
c. Long refrigerant line runs
d. Seasonal changes
e. Merchandiser temperature lower than recommended
f. Defrost after store closes when practical
g. Control Settings Medium Temperature

- Parallel Compressor Rack: Measure Discharge Air Temperature at the center of the case at the discharge honeycomb.
- Merchandiser temperature must be controlled by a mechanical or electronic pressure regulator or thermostat that will be mounted on the rack.
- Standard Off Time defrost is time terminated. The defrost frequency and lengths listed may require adjustment for specific store conditions. Factors include:

  a. Store temperature and humidity
  b. Low head pressure
  c. Long refrigerant line runs
  d. Seasonal changes
  e. Merchandiser temperature lower than recommended

Stagger defrosts to maintain stable compressor loading and sufficient defrost gas. When practical, defrost when store is closed.

Control Settings Low Temperature

- Parallel Compressor Rack: Measure Discharge Air Temperature at the center of the case at the discharge honeycomb.
- Merchandiser temperature must be controlled by a mechanical or electronic pressure regulator or thermostat that will be mounted on the rack.
- Standard Electric defrost is temperature terminated. Failsafe must not control defrost cycle length, especially when less than 208 VAC power supply is used for defrost heaters, or if frost build up is heavy from shopping demands.

Optional Gas defrost is time terminated and has fan cycling thermostat. The defrost frequency and lengths listed may require adjustment for specific store conditions.
Factors include:

  a. Store temperature and humidity
  b. Low head pressure
  c. Long refrigerant line runs
  d. Seasonal changes
  e. Merchandiser temperature lower than recommended

Stagger defrosts to maintain stable compressor loading and sufficient defrost gas. When practical, defrost when store is closed.

Electric Defrost is standard for low temperature merchandisers and requires temperature termination. Gas defrost is optional. Off Time Defrost is standard for medium temperature merchandisers and is time terminated. When two or more merchandisers with full length wireways are installed in line, remove the splashguards, end caps and wireway covers, and install the nipple and nuts (supplied) providing electrical passage from one merchandiser to the next. Following NEC and local codes is the responsibility of the electrical contractor.

Safety Shut-Off Valves (A2L only)

a. Safety shut off valves are factory-installed on each case. Do not bypass safety shut off valves.
b. Safety shut-off valves shall not block in liquid refrigerant unless adequate relief is provided to the refrigerant system low pressure side.
c. Safety shut-off valves are located in such a way such that leaks upstream of the safety shut-off valve shall not enter the internal volume of the partial unit and in a space with a room volume large enough so that the maximum refrigerant charge complies to the limit for releasable charge.
d. Safety shut-off valves are positioned to enable access for maintenance by an authorized person.
e. The safety shut-off solenoid valve is located in the A2L isolation valve enclosure on top of the case, on the right side near the refrigerant piping (top piping) egress.

RLN5 model shown with doors and ends removed for clarity. Other reach-in models have similar shut-off valve locations.

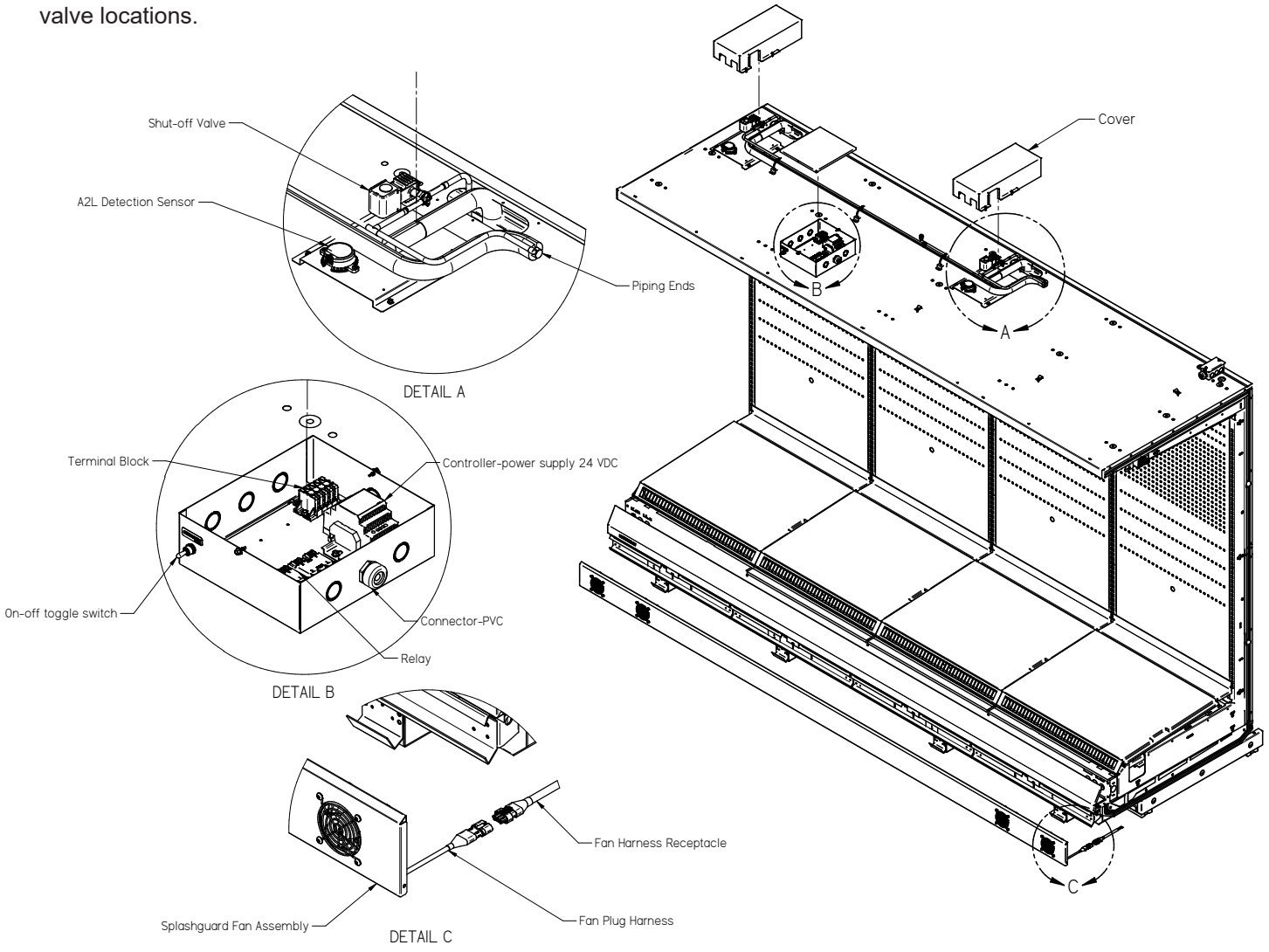

Pumped Liquid R-744 (CO_2) Case Inlet Solenoid Valve

The 120 VAC case inlet solenoid valve is normally closed and must receive a signal from the rack or case controller to provide temperature control. The solenoid valve must shut off (de-energize) during defrost and when case discharge air temperature is satisfied. Settings are provided on the CO_2 application data sheets for each specific case model.

Differential of the controller must be set to 2° F (1.1° C) or less to avoid large fluctuations in discharge air temperature. A swing of as much as 5° F (2.8° C) total (+/-2.5° F [1.4° C]) will not affect product temperatures.

Liquid line solenoid lead wires are terminated in the raceway and marked with an identification tag or connected to a factory installed case controller.

Panel, Bumper, and Guard Installation

Installing Splashguards

The splashguard is shipped inside each merchandiser. After merchandisers have been leveled and joined, and all drip piping, electrical and refrigeration work has been completed, re-install the front color panel, then install the splashguards. First, position top of splashguard over the top edge of the bracket; second, push the lower edge of the splashguard toward the bottom of the bracket until it snaps into place. Splashguards are joined with a galvanized metal splice connector that comes with the joint kit. Join the splashguards before installing on case.

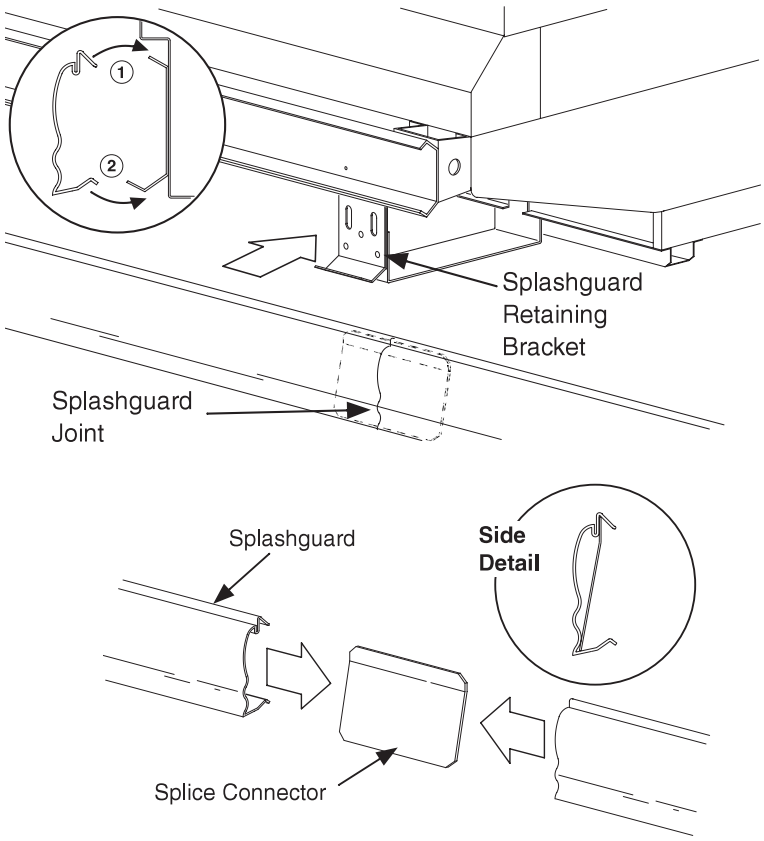

Hussmann Corporation • Bridgeton, MO 63044-2483 U.S.A. • www.hussmann.com
U.S. & Canada 1-800-922-1919 • Mexico 800-890-2900

Installing Splashguard Fans (A2L only)

(Retainers and Panels)

Splashguard fans are shipped with Impact reach-in cases that utilize A2L refrigerants. Splashguard fans must be installed in order for the case to operate. These fans are always off during normal operation, and turn on if an A2L leak is detected.

To Install Splashguard Fans:

a. Check to be sure that all splashguard brackets are level with the floor.
b. Loosely attach the lower splashguard retainer bracket using # 8 SM screws.
c. Re-install the front color panel, then install the splashguard fan assembly.
d. Install splashguard fan assembly. Connect the fan harness to the receptacle harness under the case. Slide splashguard fan assembly over the retainer bracket.
e. Push the lower edge of the splashguard fan assembly toward the bottom of the bracket until it snaps into place.
f. Tighten the splashguard brackets.
g. Confirm the splashguard fan assembly and harness is firmly attached, unobstructed, and operational.

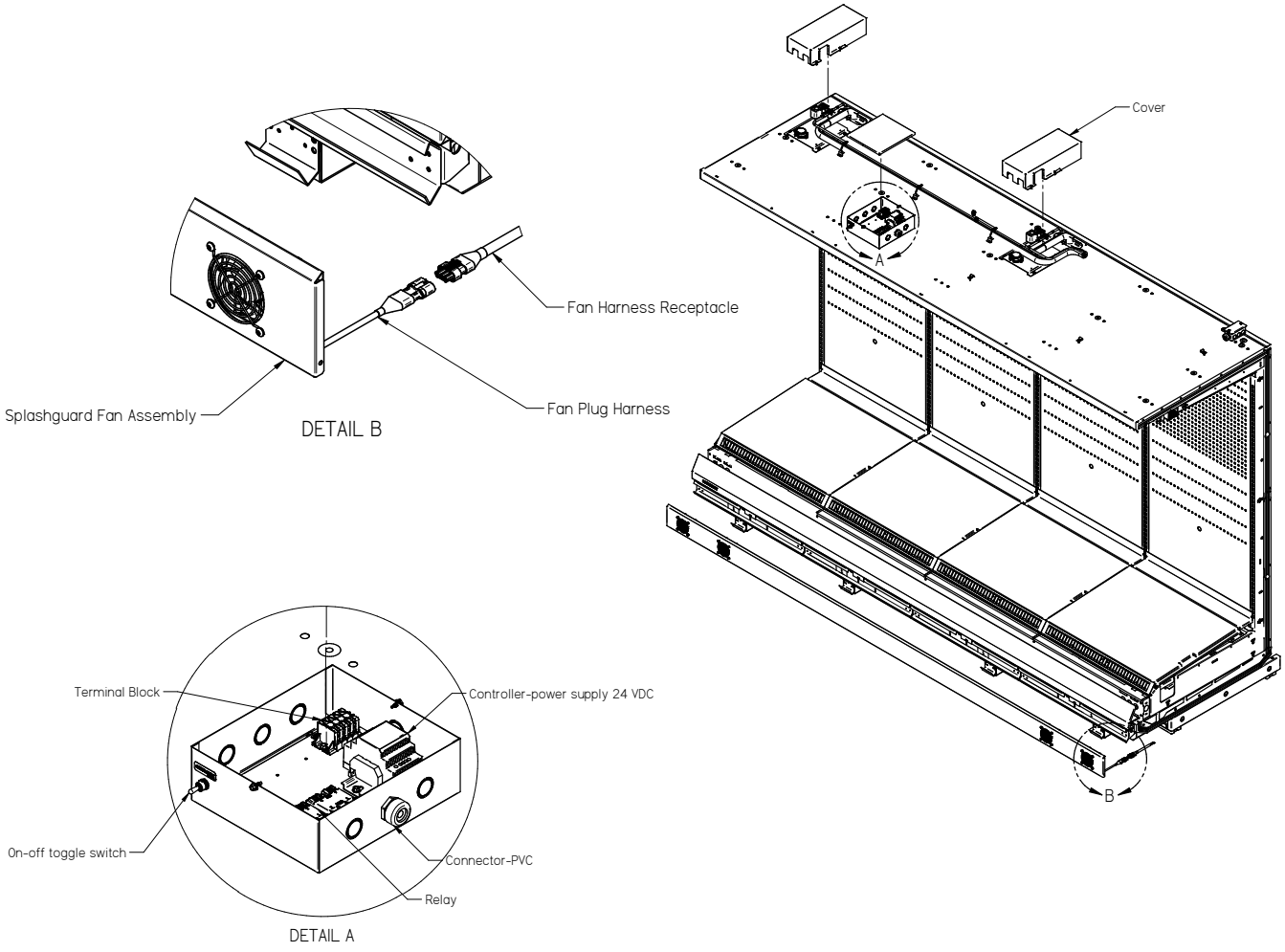

Impact® Reach-In

Installation Information

Installing Bumpers

Offsetting the bumpers and top rails helps to disguise the joint locations, giving the lineup a smoother look.

Begin at the left end of the line-up. A starter bumper is factory-installed with end kits. Insert the internal joint trim, then add the full-length bumper.

Align each bumper section with its retainer and push into place, working from the end of the lineup. Install full length bumpers and internal joint trims offset across joints. Make sure that no gaps exist between sections. Continue installing bumpers the length of the line up.

Do NOT install the last bumper sections at this time. These sections will be installed in the last step.

Once all except the last section of bumper have been installed, refrigerate the case line-up for at least six (6) hours. The last sections of bumper should be kept inside a refrigerated case or cooler during this time to allow the bumpers to contract.

Before installing the last full-length section, measure the remaining space. Use a miter box and fine-tooth saw to cut last bumper to length. Install the last section. Remove protective film from bumpers once installation is complete. Optional end bumpers are factory-installed.

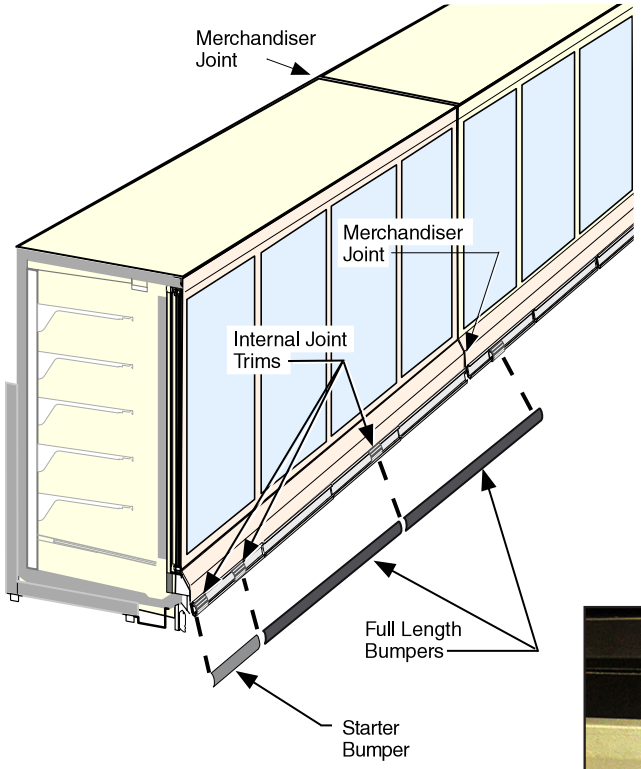

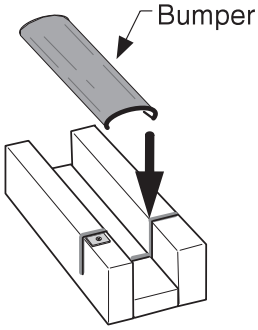

Miter Box

Bumper End Caps can be adjusted horizontally to eliminate gaps.

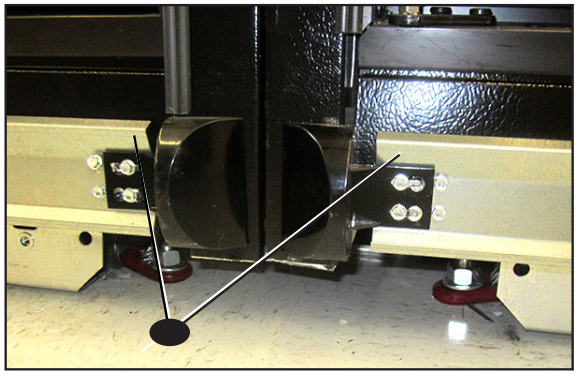

Hussmann Corporation • Bridgeton, MO 63044-2483 U.S.A. • www.hussmann.com
U.S. & Canada 1-800-922-1919 • Mexico 800-890-2900

Installation Information

Sealing Merchandiser to Floor

If required by local sanitary codes, or if the customer desires, merchandisers may be sealed to the floor using a vinyl cove base trim. The size needed will depend on how much variation there is in the floor, from one end of the merchandiser to the other.

Optional stainless steel splashguards may be sealed to the floor using a vinyl cove base trim. The size of trim needed will depend on how much the floor is out of level.

Remove all dirt, wax and grease from the area of the splashguard where adhesion will be necessary. This is to ensure a good and secure installation.

Apply a good contact cement to the cove trim and allow proper drying time according to the directions supplied with the cement. Install the trim to the splashguard so that it is lying flush with the floor. Do not seal the trim to the floor. If required by local health codes Cove Trim may be sealed to the floor using a silicone type sealer. Sealant must be removed and replaced when servicing.

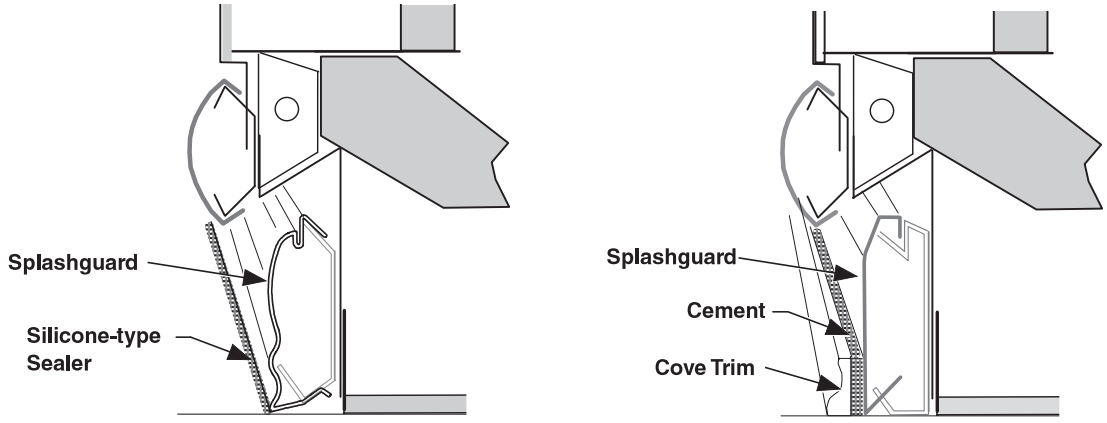

Door/Glass Adjustment

(Post-Leveling and Joining)
After leveling and joining the merchandisers:

For cases equipped with Innovator Doors:
Refer to the main installation manual and Door Manual P/N 0425683 for proper door adjustment and leveling procedures.

For cases equipped with EcoVision Doors for Example, (RMTD):
Use the main installation manual along with Door Manual P/N 3008521 to complete door adjustment and leveling.

Hussmann Corporation • Bridgeton, MO 63044-2483 U.S.A. • www.hussmann.com
U.S. & Canada 1-800-922-1919 • Mexico 800-890-2900

Shelf Installation

After the cabinet is leveled, the shelves may be installed. Various shelf depths are offered with reach-in cases. Heights are adjustable in one-inch increments. The standard depth on all Reach-In cases is 22 inches (21 inches on RFLNS and RFMNS cases). Some cases have been designed to support larger shelves, but require design modifications to support the extra shelf length. These cases have a label near the serial label that reads: This case has been reinforced to support 26-inch shelves. Do not install 26 in. shelves in any reach-in case that does not have a 26 in. shelf label. All shelves and the lower deck are intended to display product. Spacing of 12 inches is recommended for most applications. Merchandisers may be ordered with optional “L” shaped wire shelves.

To install shelves place the rear of the bracket in the desired slot. Raise the front of the brackets towards the rear of the cabinet. Once the ends are in the slot, rotate the bracket forward, locking it in place.

Load Limits

The standard shelves are rated for 170 lb (77 kg) each load capacity. Exceeding this load can cause damage to the shelves, case, damage to store products, and potentially create a hazardous condition for customers and store personnel. Product must be within designated load limit to ensure proper refrigeration and air curtain performance. Product shelves should be loaded so that the product does not extend over the front edge of the shelf. Product loaded over the edge will interfere with air circulation in the cabinet. It is also desirable to leave a small space between the rear interior wall and the product on the shelves, to allow air to enter the cabinet interior through the perforations in the rear wall.

Air discharge and return flues must remain open and free of obstruction at all times to provide proper refrigeration and air curtain performance. Do not allow product, packages, signs, etc. to block these grilles. Do not use non-approved shelving, baskets, display racks, or any accessory that could hamper air curtain performance. Do not prop doors open while stocking. And keep the doors closed as much as possible to prevent coil frosting and high merchandiser temperature.

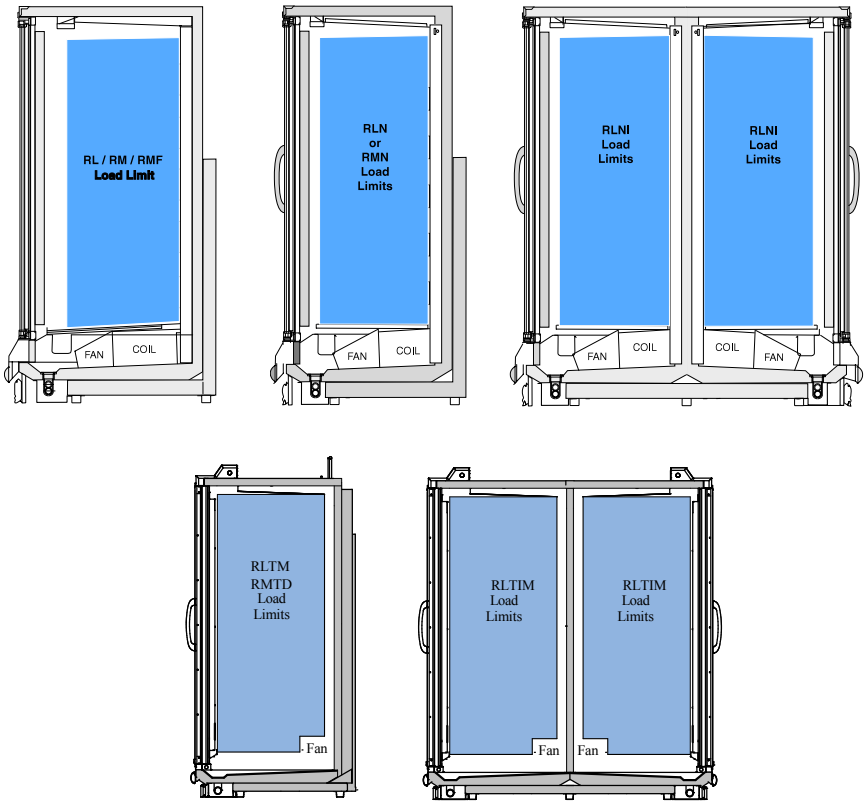

Hussmann Corporation • Bridgeton, MO 63044-2483 U.S.A. • www.hussmann.com
U.S. & Canada 1-800-922-1919 • Mexico 800-890-2900

Shelf Depths

26” (660 mm) shelves require structure upgrades for RL cases, indicated by label on the interior top panel. All other shelves:25lb/sqft of shelf area for all other shelf options unless otherwise labeled

Shelf Depth	Max. Load Limit (at 0° tilt)
18 in. (457 mm)	170 lb (77 kg)
20 in. (508 mm)	170 lb (77 kg)
22 in. (559 mm)	170 lb (77 kg)
24 in. (610 mm)	170 lb (90.7 kg)
26 in. (660 mm)	170 lb (90.7 kg)

Product Stocking

In addition to the prior recommendations for spacing, product should always be maintained at proper temperature. This means the temperature of the product must be controlled from the time the product is received through storage, preparation, and display to maximize the life of the product.

Product should not be placed inside the merchandisers until merchandisers are at proper operating temperature. Allow merchandiser 24 hours to operate before loading product. Proper rotation of product during stocking is necessary to prevent product loss. Always bring the oldest product to the front and set the newest to the back.

- Air discharge and return flues must remain open and free of obstruction at all times to provide proper refrigeration and air curtain performance. Do not allow product, packages, signs, etc. to block these grilles.
- Do not prop doors open while stocking. And keep the doors closed as much as possible to prevent coil frosting and high merchandiser temperature.
- Hussmann recommends solid shelves for ice cream.

Thermometer

NSF 7 and US FDA Food Code Required Thermometer

Important — Please read before stocking unit.

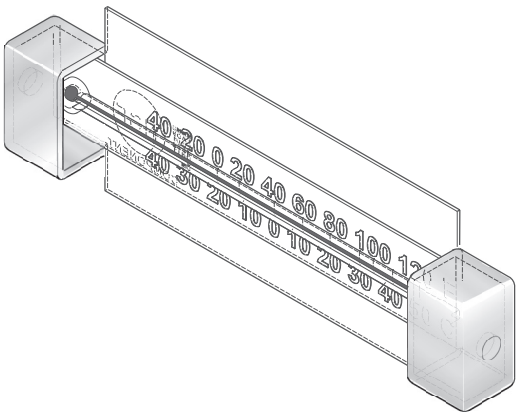

Thermometer (part number 0443314) is provided in response to United States Food and Drug Administration Food Code [www.fda.gov] and NSF/ANSI Standard 7 [www.nsf.org]. Questions about either code should be addressed to local agencies or other appropriate officials.

Each installation will be different depending on how the unit is stocked, shopping patterns in the department, and ambient conditions of the store. The suggested locations provided herein are possible locations. It is the responsibility of the purchaser/user to determine the location within the food storage area of the case that best meets the code requirements of US FDA and NSF.

The thermometer may need to be moved several times to find the warmest location. Mounting options include flexible plastic for price tag molding application, magnet applied to back of flexible plastic for steel end wall, and double-sided tape. If tape is used, tape must not be exposed after installation.

Suggested Possible Thermometer Locations

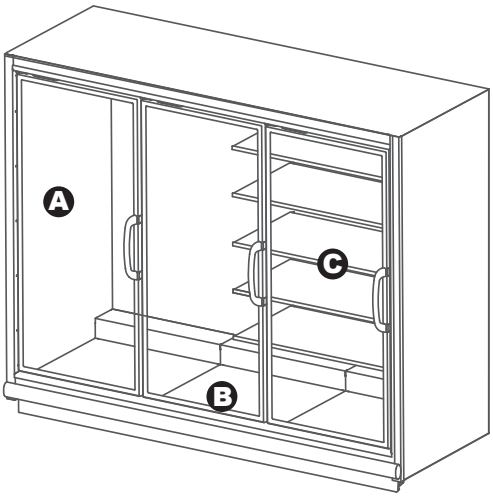

Location A: On inside of end panel

Location B: At return air grille

Location C: On shelf end, affixed to price tag molding

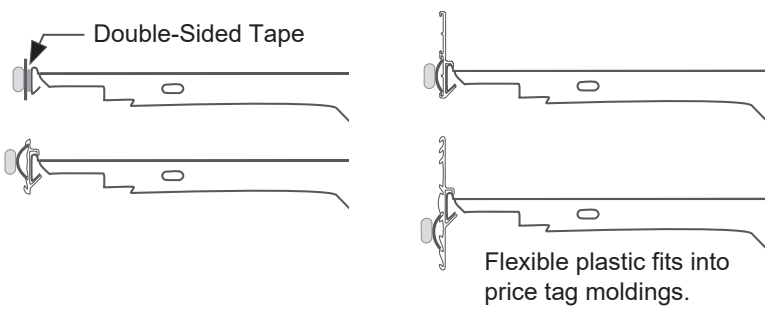

⚠WARNING

READ ALL WARNINGS AND PROCEDURES IN THIS MANUAL AND ON THE EQUIPMENT BEFORE SERVICING OR PERFORMING MAINTENANCE ON THIS EQUIPMENT.

FAILURE TO ABIDE BY THESE WARNINGS COULD RESULT IN AN EXPLOSION, DEATH, INJURY, AND PROPERTY DAMAGE.

Checks and Repairs for A2L Equipment

Prior to beginning work on systems containing flammable refrigerants, safety checks are necessary to ensure that the risk of ignition is minimized.

- Work shall be undertaken under a controlled procedure, as documented below, to minimize the risk of a flammable gas or vapor being present while work is being performed.
- Prior to performing any service work, make sure all tools and equipment have been certified for use with flammable refrigerants.
- All maintenance staff and others working in the local area shall be instructed on the nature of work being carried out. Work in confined spaces shall be avoided.
- The area shall be checked with an appropriate refrigerant detector prior to and during work, to ensure the technician is aware of potentially toxic or flammable atmospheres. Ensure that the leak detection equipment being used is suitable for use with all applicable refrigerants, i.e., non-sparking, adequately sealed, or intrinsically safe.
- If any hot work is to be conducted on the refrigerating equipment or any associated parts, appropriate fire extinguishing equipment shall be available on hand. A dry chemical or CO_2 fire extinguisher should be adjacent to the charging area.
- No person carrying out work in relation to a refrigerating system which involves exposing any pipe work shall use any sources of ignition in such a manner that it may lead to the risk of fire or explosion. All possible ignition sources, including cigarette smoking, should be kept sufficiently far away from the site of installation, repairing, removing and disposal, during which refrigerant can possibly be released to the surrounding space. Prior to work taking place, the area around the equipment shall be surveyed to make sure that there are no flammable hazards or ignition risks. “No Smoking” signs shall be displayed.
- Ensure that the area is in the open or that it is adequately ventilated before breaking into the system or conducting any hot work. A degree of ventilation shall continue during the period that the work is carried out. The ventilation should safely disperse any released refrigerant and preferably expel it externally into the atmosphere.
- The following checks shall be applied to installations using flammable refrigerants:
  i. The actual refrigerant charge is in accordance with the room size within which the refrigerant containing parts are installed.
  ii. The ventilation machinery and outlets are operating adequately and are not obstructed.
  iii. If an indirect refrigerating circuit is being used, the secondary circuit shall be checked for the presence of refrigerant.
  iv. Marking to the equipment continues to be visible and legible. Markings and signs that are illegible shall be corrected.
  v. Refrigerating pipe or components are installed in a position where they are unlikely to be exposed to any substance which may corrode refrigerant containing components, unless the components are constructed of material which are inherently resistant to being corroded or are suitably protected against being so corroded.
- Where electrical components are being changed, they shall be fit for the purpose and to the correct specification. At all times, the manufacturer’s maintenance and service guidelines shall be followed. If in doubt, consult the manufacturer’s technical department for assistance.

- During repairs to sealed components, all electrical supplies shall be disconnected from the equipment being worked upon prior to any removal of sealed covers, etc. If it is absolutely necessary to have an electrical supply to equipment during servicing, then a permanently operating form of leak detection shall be located at the most critical point to warn of a potentially hazardous situation. Particular attention shall be paid to the following to ensure that by working on electrical components, the casing is not altered in such a way that the level of protection is affected. This shall include damage to cables, excessive number of connections, terminals not made to the original specification, damage to seals, incorrect fitting of glands, etc.
  i. Ensure that the apparatus is mounted securely.
  ii. Ensure that seals or sealing materials have not degraded to the point that they no longer serve the purpose of preventing the ingress of flammable atmospheres. Replacement parts shall be in accordance with the manufacturer's specifications.
- Intrinsically safe components are the only types that can be worked on while live in the presence of a flammable atmosphere. The test apparatus shall be at the correct rating. Replace components only with parts specified by the manufacturer. Other parts can result in the ignition of refrigerant in the atmosphere from a leak.
- Any vacuum used for cleaning coils should be approved for flammable refrigerants.

Checks and Repairs for R-744 (CO_2) Equipment

- Replacement parts must be compatible with the specific equipment's maximum design pressure as shown on the equipment labeling. For example, if the equipment has been designed to meet 1,305 psig (90 bar) maximum design pressure then any replacement part must be 1,305 psig (90 bar) compatible.

Checks and Repairs for All Equipment

- Repair and maintenance to electrical components shall include initial safety checks and component inspection procedures. If a fault exists that could compromise safety, then no electrical supply shall be connected to the circuit until it is satisfactorily dealt with. If the fault cannot be corrected immediately but it is necessary to continue operation, an adequate temporary solution shall be used. This shall be reported to the owner of the equipment, so all parties are advised. Initial safety checks shall include:
  i. Ensure that capacitors are discharged—this shall be done in a safe manner to avoid the possibility of sparking.
  ii. Ensure that no live electrical components and wiring are exposed while charging, recovering, or purging the system.
  iii. Ensure that there is continuity of earth bonding.
- Do not apply any permanent inductive or capacitance loads to the circuit without ensuring that this will not exceed the permissible voltage and current permitted for the equipment in use.
- LOCK OUT / TAG OUT — To avoid serious injury or death from electrical shock, always disconnect the electrical power at the main disconnect when servicing or replacing any electrical component. This includes, but is not limited to, such items as doors, lights, fans, heaters, and thermostats.
- Check that cabling will not be subject to wear, corrosion, excessive pressure, vibration, sharp edges, or any other adverse environmental effects. The check shall also take into account the effects of aging or continual vibration from sources such as compressors or fans.
- Refrigerating pipe or components are installed in a position where they are unlikely to be exposed to any substance which may corrode refrigerant containing components, unless the components are constructed of materials which are inherently resistant to being corroded or are suitably protected against being so corroded.
- To reduce the risk of fire, electrical shock or injury when cleaning this merchandiser:
  -Unplug the merchandiser before cleaning.
  -Keep all liquids away from electrical and electronic components.

Care and Cleaning

Long life and satisfactory performance of any equipment is dependent upon the care it receives. To ensure long life, proper sanitation and minimum maintenance costs, this equipment should be thoroughly cleaned, all debris removed and the interiors washed down. Cleaning often will control or eliminate odor buildup. Frequency of cleaning is dependent on usage and local health requirements. All case cleaning and maintenance procedures should be performed with the power disconnected at the breaker. Failure to adhere to these instructions can lead to damage to the unit and creates the risk of flammability or electrical shock.

Fan Plenum

To facilitate cleaning, the fan plenum is hinged and also fastened with screws at each end. After cleaning be sure the plenum is properly lowered into position and that screws are reinstalled or product loss will result due to improper refrigeration. Do not unplug the fan motor harness. The fan motor harness should not be disconnected or reconnected to perform cleaning. This connection should only be disconnected or reconnected by a qualified contractor and only in the event of fan motor replacement.

Always*Clear™ Glass

Wipe inside of glass with isopropyl alcohol and a soft cloth. Allow surface to dry before closing door. Use of other cleaners or abrasives may damage the Always*Clear surface, and/or void the warranty.
Refer to manual that ships with doors.

Interior Surfaces

The interior surfaces may be cleaned with most domestic detergents, ammonia based cleaners and sanitizing solutions with no harm to the surface.

Exterior Surfaces

The exterior surfaces should be cleaned with a mild detergent and warm water to protect and maintain their attractive finish. Never use abrasive cleansers or scouring pads.

Do Not Use:

- Abrasive cleansers and scouring pads, as these will mar the finish.
- Coarse paper towels on coated glass.
- Ammonia-based cleaners on acrylic parts.
- Solvent, oil or acidic based cleaners on any interior surfaces.

Do:

- Remove the product and all loose debris to avoid clogging the waste outlet.
- Store product in a refrigerated area such as a freezer. Remove only as much product as can be taken to the freezer in a timely manner.
- First turn off refrigeration, then disconnect electrical power.
- Thoroughly clean all surfaces with soap and hot water. Do not use steam or high water pressure hoses to wash the interior. These will destroy the merchandisers' sealing causing leaks and poor performance.
- Remove screws and lift hinged fan plenum for cleaning. Be sure to reposition the fan plenum after cleaning merchandiser.
- Take care to minimize direct contact between fan motors and cleaning or rinse water.
- Rinse with hot water, but do not flood. Never introduce water faster than the waste outlet can remove it.
- Allow merchandisers to dry before resuming operation.
- After cleaning is completed, turn on power and refrigerant to the merchandiser.
- Verify that merchandiser is working properly.

Impact® Reach-In
Maintenance and Service

Recommended Cleaning Instructions

The directions below are recommended cleaning instructions for Impact Reach-in cases and should not be used as a substitute for the store's regular maintenance schedule. Follow all local and national health codes. Cleanliness of the case encourages long-lasting life of the equipment. This guide lists some of the key areas of the cases that require cleaning to help maintain the overall appearance and performance of the equipment and keep it free of debris. The cases may need additional cleaning, especially in high traffic areas, dusty areas and during unusually extended periods of use of the equipment.

Weekly or Monthly

1. Remove the product and store it in a separate case or a suitable walk-in cooler.
2. Take out the wire racks and bottom pans, and clean them in warm, soapy water. Rinse them thoroughly and set them aside.
3. Turn off the power to the case at the breaker.
4. If necessary, flip up the fan plenum assembly to create more space for cleaning.
5. Remove all loose debris and food particles that could clog the drain. Check the drain to ensure it is not obstructed. Avoid forcing items down the drain; use the drain catch to remove debris and dispose of it properly.
6. Remove the honeycomb and price display molding.
7. Clean all surfaces, including shelves and the honeycomb, by spraying them with warm water and mild detergent. Use a brush or cleaning pad if necessary to help remove dirt.
8. Rinse all surfaces with clean water, then spray them with a sanitizer. After allowing the sanitizer to sit for a moment, rinse it off with clean water using a hose. Let the surfaces air dry, as wiping them could undermine the sanitization process.
9. Carefully replace all internal parts, ensuring they are seated properly for optimal case performance.
10. Turn the power to the fans back on at the breaker.
11. Replace the product.

Quarterly or Semiannually

1. Remove product; store it in another case or suitable walk-in cooler.
2. Take out the wire racks and bottom pans, and clean them in warm, soapy water. Rinse them thoroughly and set them aside.
3. Turn off the power to the case at the breaker.
4. Flip up the fan plenum assembly to provide more room for cleaning in the case if necessary.
5. Remove all loose debris and food particles that may clog drain. Check drain to make sure it is not clogged. Do not force items down drain, use the drain catch to remove debris and dispose.
6. Remove honeycomb and price display moulding.
7. Clean all surfaces including shelves and honeycomb by spraying down water (preferably warm) and mild detergent. Use a brush or cleaner pad if necessary to aid in penetrating dirt.
8. Remove all the shelves and set aside then remove the back panels.
9. Clean the backside of the back panels in the case as you remove them.
10. Clean the newly exposed surfaces and the coil by spraying down with water (preferably warm) and a mild detergent solution.
11. Rinse the newly exposed surfaces and the coil with water then spray with a sanitizer. Allow surfaces to air-dry, since wiping would defeat the purpose of sanitizing.
12. Replace the back panels and shelves.
13. Rinse all surfaces with water, then spray with a sanitizer. Allow surfaces to air-dry since wiping would defeat the purpose of sanitizing.
14. Replace all remaining internal parts carefully so that they seat properly. This is necessary for proper case operation.
15. Turn the power to the fans back on at the breaker.
16. Replace the product.

Cleaning Honeycomb Assemblies

Honeycombs should be cleaned every six months. Dirty honeycombs will cause merchandisers to perform poorly. The honeycombs may be cleaned with a vacuum cleaner. Soap and water may be used if all water is removed from the honeycomb cells before reassembling. Be careful not to damage the honeycombs.

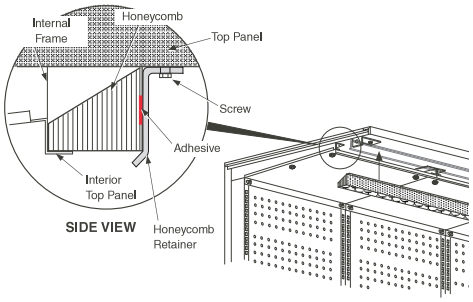

a. Remove the sheet metal screws located in the front metal retainer which holds the honeycomb assembly in place.
b. Lift the honeycomb assembly out of the L-bracket to remove it.
c. Clean and dry the honeycomb.
d. After cleaning, reassemble in reverse order of removal.

Cleaning Stainless Steel Surfaces

Use non-abrasive cleaning materials, and always polish with grain of the steel. Use warm water or add a mild detergent to the water and apply with a cloth. Always wipe rails dry after wetting.

Use alkaline chlorinated or non-chlorine containing cleaners such as window cleaners and mild detergents. Do not use cleaners containing salts as this may cause pitting and rusting of the stainless steel finish. Do not use bleach. Clean frequently to avoid build-up of hard, stubborn stains. A stainless steel cleaning solution may be used periodically to minimize scratching and remove stains. Rinse and wipe dry immediately after cleaning. Never use hydrochloric acid (muriatic acid) on stainless steel.

Cleaning Coils

NOTICE

Hussmann does not recommend using misting systems. Misting systems impact the performance and reliability of the coils.

Never use sharp objects around coils. Use a soft brush or vacuum brush to clean debris from coils. Do not puncture coils. Do not bend fins. Contact an authorized service technician if a coil is punctured, cracked, or otherwise damaged. Do NOT use chlorine or ammonia-based cleaners to clean aluminum coils.

Ice in or on the coil indicates the refrigeration and defrost cycle is not operating properly. Contact an authorized service technician to determine the cause of icing, and to make adjustments as necessary. To maintain product integrity, move all product to a cooler until the unit has returned to normal operating temperatures.

Cleaning Under Merchandisers

Remove splashguards not sealed to floor. Use a vacuum with a long wand attachment to remove accumulated dust and debris from under the merchandiser.

Removing Scratches from Bumper

Most scratches and dings can be removed using the following procedure.

1. Use steel wool to smooth out the surface area of the bumper or top rail.
2. Clean area.
3. Apply vinyl or car wax and polish surface for a smooth glossy finish.

Troubleshooting

This guide is designed to help identify, diagnose and resolve common issues.

Issue	Possible Cause(s)	Potential Solution
case temperature is too warm	ambient conditions may be affecting the case operation.	ensure case is not positioned near sources of air disturbances such as open doors, windows, electric fans, or air conditioning vents; case must be located at least 15 feet away from any doors or windows; check ambient design conditions on the serial plate
	discharge air temp is out of specified range	check evaporator fan operation check electrical connections and input voltage
		fans are installed backwards; check airflow direction
		make sure fan blades have correct pitch and are per specification
		check to see that fan plenum is installed correctly with no air gaps
		check suction pressure and ensure that it meets factory specifications
		case is in defrost; check defrost settings see technical datasheet
	product is outside of the load limit area, blocking airflow	redistribute product so it does not exceed load limit there is a sticker on the inside of the case indicating the maximum load limit
	coil is freezing over. condensing coil or evaporator coil is clogged or dirty	return air is blocked, make sure debris is not blocking the intake section
		coil close-offs are not installed. Inspect coil to make sure these parts are on the case
		clean coil
case temperature is too cold	t-stat temp is set too low	check settings; see technical specifications on the datasheet
	ambient conditions may be affecting the case operation	ensure case is not positioned near sources of air disturbances such as open doors, windows, electric fans, or air conditioning vents; case must be located at least 15 feet away from any doors or windows; check ambient design conditions on the serial plate
frost or ice on evaporator coil	evaporator fans are not functioning	check electrical connections
	defrost clock is not functioning	case should be serviced by a qualified service technician
	coil is freezing over	return air is blocked, make sure debris is not blocking the intake section
		coil close-offs are not installed. Inspect coil to make sure these parts are on the case
coil freezing	lack of airflow over the coil	check for proper clearance and installation location
		coil is clogged or dirty - clean coils
		check fans for cleanliness and proper function
	low refrigerant charge/pressure	check system charge/pressure
		check system piping to ensure there are no problematic restrictions or design features
		check for abnormal pressure drops at metering devices and valves
water has pooled under case; case not draining properly	case drain is clogged.	clear drain.
	PVC drains under case may have a leak.	repair as needed.
	case tub has unsealed opening.	seal as needed.
	if case is in a lineup, case-to-case joint is missing	install case-to-case joint and seal as needed.
	evaporator pan is overflowing	check electrical connections to evpaporation pan; check pan float assembly
	case is not level	ensure case is level using metal shims as necessary
	drain screen or p-trap clogged	clear debris
lights do not come on	LED driver / light socket wiring	check electrical connections
	LED driver needs to be replaced	case should be serviced by a qualified technician
	LED fixture socket / connection	case should be serviced by a qualified technician
	LED fixture needs to be replaced	lighting should only be replaced with like parts contact your Hussmann representative
	light switch needs to be replaced	case should be serviced by a qualified service technician

Refrigerant Removal, Evacuation, and Recovery

WARNING: Always use a pressure regulator when operating nitrogen tanks.

WARNING: Never trap liquid refrigerant between closed valves as this could cause a hydraulic explosion.

When breaking into the refrigerant circuit to make repairs—or for any other purpose—conventional procedures shall be used. However, for flammable refrigerants it is important that best practice be followed, since flammability is a consideration. The following procedure shall be adhered to:

a. Safely remove refrigerant following local and national regulations
b. Purge the circuit with inert gas
c. Evacuate
d. Purge with inert gas
e. Open the circuit by cutting or brazing

The refrigerant charge shall be recovered into the correct recovery cylinders if venting is not allowed by local and national codes. The system shall be purged with oxygen-free nitrogen to render the appliance safe for flammable refrigerants. This process might need to be repeated several times. Compressed air or oxygen shall not be used for purging refrigerant systems.

Refrigerants purging shall be achieved by breaking the vacuum in the system with oxygen-free nitrogen and continuing to fill until the working pressure is achieved, then venting to atmosphere, and finally pulling down to a vacuum. This process shall be repeated until no refrigerant is within the system. When the final oxygen-free nitrogen charge is used, the system shall be vented down to atmospheric pressure to enable work to take place.

Nitrogen and moisture will remain in the system unless proper evacuation procedures are followed. Nitrogen left in the system may cause head pressure problems. Moisture causes EEV ice blockage, wax build up, acid oil, and sludge formation.

Do not simply purge the system. This procedure is expensive, harmful to the environment, and may leave moisture and nitrogen behind.

Do not run the compressors to evacuate. This procedure introduces moisture into the compressor’s crankcase oil and does not produce adequate vacuum to remove moisture from the rest of the system at normal temperatures.

Ensure that the outlet for the vacuum pump is not close to any potential ignition sources and that ventilation is available.

Recovery Procedure

When removing refrigerant from a system, either for servicing or decommissioning, it is recommended good practice that all refrigerants are removed safely. When transferring refrigerant into cylinders, ensure that only appropriate refrigerant recovery cylinders are employed. Ensure that the correct number of cylinders for holding the total system charge is available.

All cylinders to be used are designated for the recovered refrigerant and labeled for that refrigerant (i.e., special cylinders for the recovery of refrigerant). Cylinders shall be complete with pressure-relief valve and associated shut-off valves in good working order. Empty recovery cylinders are evacuated and, if possible, cooled before recovery occurs.

The recovery equipment shall be in good working order with a set of instructions concerning the equipment that is at hand and shall be suitable for the recovery of all appropriate refrigerants including, when applicable, FLAMMABLE REFRIGERANTS. In addition, a set of calibrated weighing scales shall be available and in good working order. Hoses shall be complete with leak-free disconnect couplings and in good condition. Before using the recovery machine, check that it is in satisfactory working order, has been properly maintained and that any associated electrical components are sealed to prevent ignition in the event of a refrigerant release. Consult manufacturer if in doubt.

The recovered refrigerant shall be returned to the refrigerant supplier in the correct recovery cylinder, and the relevant waste transfer note arranged. Do not mix refrigerants in recovery units and especially not in cylinders.

If compressors or compressor oils are to be removed, ensure that they have been evacuated to an acceptable level to make certain that FLAMMABLE REFRIGERANT does not remain within the lubricant. The evacuation process shall be carried out prior to returning the compressor to the supplier. Only electric heating to the compressor body shall be employed to accelerate this process.

When oil is drained from a system, it shall be carried out safely.

Leak Detection (all refrigerants)

Under no circumstances shall potential sources of ignition be used in the searching for or detection of refrigerant leaks. Do not unplug any device if a leak is detected or suspected. A halide torch (or any other detector using a naked flame) shall not be used. The following leak detection methods are deemed acceptable for all refrigerant systems:

- Electronic leak detectors may be used to detect refrigerant leaks but, in the case of FLAMMABLE REFRIGERANTS, the sensitivity might not be adequate, or might need recalibration. (Detection equipment shall be calibrated in a refrigerant-free area.) Ensure that the detector is not a potential source of ignition and is suitable for the refrigerant used. Leak detection equipment shall be set at a percentage of the LFL of the refrigerant and shall be calibrated to the refrigerant employed, and the appropriate percentage of gas (25% maximum) is confirmed.
- Leak detection fluids are also suitable for use with most refrigerants but the use of detergents containing chlorine shall be avoided as the chlorine can react with the refrigerant and corrode the copper pipe-work.

Note: Examples of leak detection fluids are bubble method and fluorescent method agents.

If a leakage of refrigerant is found which requires brazing, all of the refrigerant shall be recovered from the system, or isolated (by means of shut off valves) in a part of the system remote from the leak. Removal of refrigerant shall be according to the Refrigerant Recovery section provided.

A2L Leak Detection Sensor Service and Mitigation

⚠WARNING

- Do not drop or apply direct impact to the sensor.
- Do not apply any sharp-pointed items to the membrane filter. A broken filter will damage the water protection feature and accuracy in detection.
- Do not cover the membrane filter.
- Do not apply any air or liquid flow with high pressure.
- Do not install the sensor on curved surfaces unless the sensor remains securely fixed without bending.
- The sensor should NOT be mounted with the membrane and sensor exposed to protect the sensor from contamination and moisture.
- Do not expose the detector to temperatures above 248° F (120° C); the plastic housing may become deformed.
- Do not spray any cleaning agents on the sensor.
- Do not clean the device with corrosive chemical products, solvents, or abrasive detergents.
- Clean the enclosure only with a damp cloth. Electrostatic spark risk.
- If a leak is suspected, all naked flames shall be removed/extinguished.
- The use of silicon sealant can inhibit the effectiveness of some types of leak detection equipment. Intrinsically safe components do not have to be isolated prior to working on them.
- IMPORTANT—Electrostatic Spark Risk—Disconnect all electrical connections and pass a damp cloth on the detector enclosure before performing any maintenance.

It is recommended to always have spare sensors on-hand to prevent system from being down for an extended period in the event of a sensor expiration or failure.

A2L-equipped equipment comes with pre-installed Danfoss sensors. If your equipment uses A2L and has a different sensor or no sensor present as indicated, contact Hussmann immediately before proceeding with service or maintenance.

It is important not to relocate, remove, or disable any factory leak detection devices. These components must be replaced with the same exact part by authorized service personnel only.

Sensor Parts List

Danfoss System	
Part Description	Part Number
R-454A sensor	3216202
R-454C sensor	3216203
12-inch (305 mm) sensor harness	3216204
40-inch (1 m) sensor harness	3216206
60-inch (1.5 m) sensor harness	3216207
100-inch (2.5 m) sensor harness	3216208
240-inch (6.1 m) sensor harness	3216209

Sensor Specifications and Wiring

Specification	Value
Electrical Voltage	24 VAC +/- 10% and 24 VDC (8–32 VDC)
Compatible Refrigerant	R-454A or R-454C (as specified)

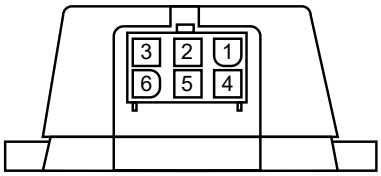

Pin Number	Function	Harness Wire Color (at sensor connection)
Pin 1	Supply Voltage	red
Pin 2	Earth/Ground	black
Pin 3	Mod A (Data +) (not used)	white
Pin 4	Mod B (Data -) (not used)	blue
Pin 5	Input Relay	yellow
Pin 6	Normally Open Contacts Output	orange

Relay Operation

- Relay is energized on power up when not in alarm state
- Relay is de-energized in alarm or no power state

Sensor Mitigation and Alarms

When the sensor is powered on, an LED positioned on the back of the sensor near the sensor membrane indicates its status. When the sensor is mounted, the LED backlights the sensor and can be seen as a reflection on the mounting surface.

Solid green	-Sensor power-up and self-test
Blinking green	-Normal operation (heartbeat)
Solid red	-Alarm state – gas detected
Blinking red	-Sensor fault

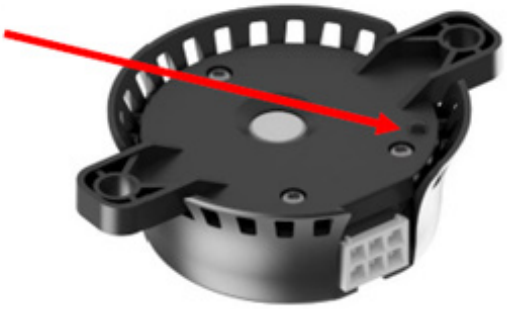

When the sensor detects a gas reading at or above the alarm threshold, the relay de-energizes, causing the relay contacts to open during the alarm. Additionally, the alarm flag is set in the alarm status register.

To reset the alarm, the sensor reading must drop at least 2.5% below the alarm threshold. Once this happens follow instructions in the ‘Sensor Reset Instructions’ section below. After completing this, the relay re-energizes and the sensor returns to normal operation. The alarm flag is also cleared by these actions. After the alarm is reset, the relay remains open for five seconds before resuming normal operation.

Note: If not manually reset, the sensor will not automatically reset for approximately 24 days.

Self-diagnostics are performed when the sensor is first powered on. If a fault is detected the sensor LED will begin to blink red approximately 5 seconds after being powered on. These tests ensure the integrity of the memory, embedded program, and power supply.

The sensor continuously performs diagnostics to monitor its integrity, checking for issues such as shorts, open circuits, out-of-range values, and communication errors, as well as the integrity of the on-board memory, programming, oscillator, and voltage levels.

Sensor Position

Refrigerant leak sensors in Impact reach-in cases are installed on top of the case near the refrigerant piping ends and A2L safety shut-off valve. Another A2L leak detection sensor is mounted at the center of the return air grille inside the case.

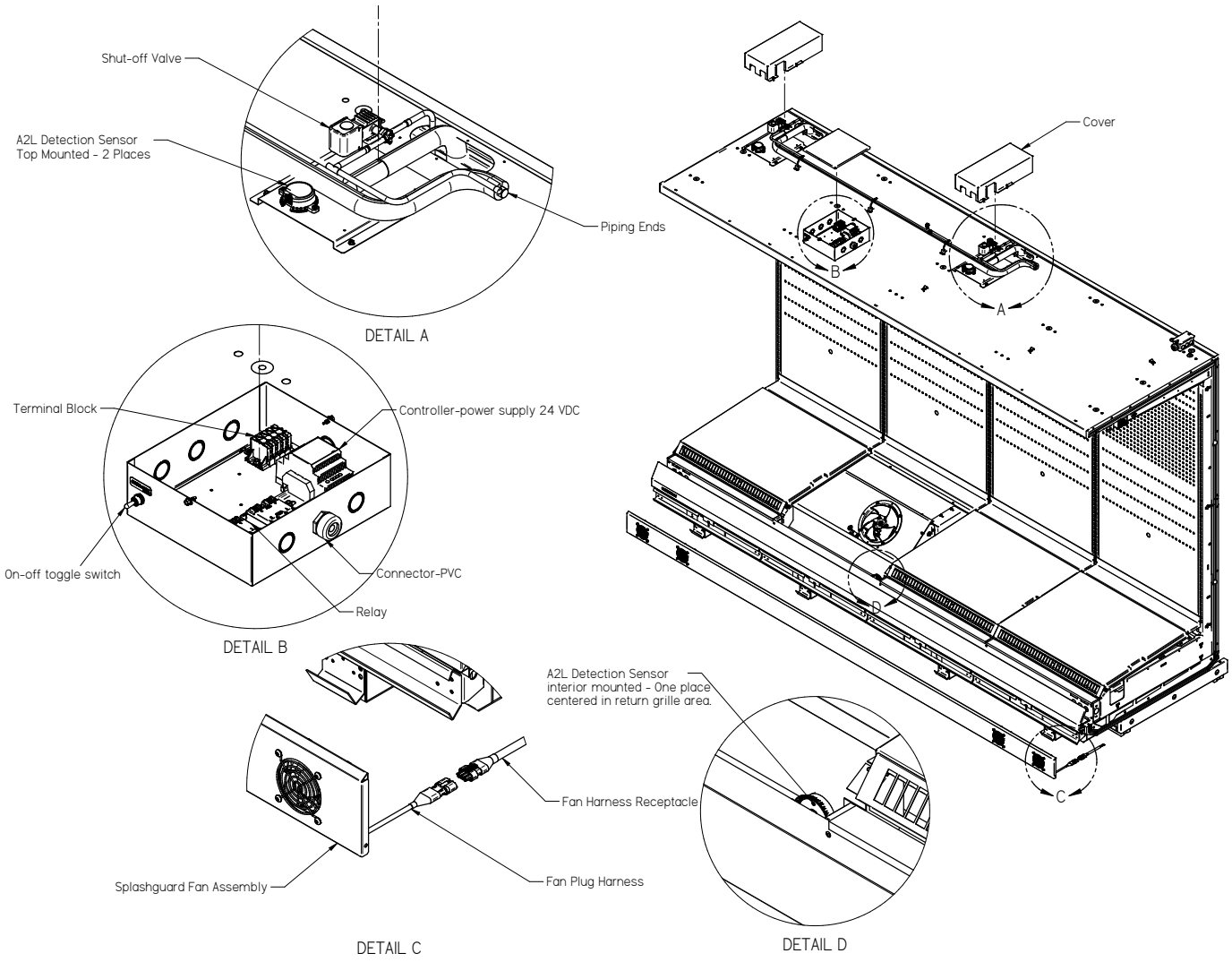

Sensor System Check

These steps should be used to verify proper operation at system startup and periodically (at least annually) during normal maintenance.

Warning: The lighter used for testing should never be struck or lit to cause a spark or flame at any point, it is only being used for the gas it emits.

1. Power on sensor 1 and let it complete initialization routine.
2. Green light should be active (normal status/blinking).
3. Expose sensor 1 to mixture by holding the button on a lighter without touching the striker (it should trigger in less than 60 seconds). The end of the lighter the gas comes out will need to be placed near the base of the sensor where it mounts to the unit.
4. Verify that sensor 1 triggers an alarm (open/de-energized inside relay) and switches to red light.
5. Verify that the liquid shut-off solenoid(s) are de-energized and closed.
6. Verify that ventilation fans are activated (if applicable).
7. Wait five minutes, then manually reset the sensor using the procedure in the following section and verify it is in normal state.
8. If the case has multiple sensors, repeat steps 3-7 for each remaining sensor.

If needed, the system (external to the sensor) can also be tested independently by opening the circuits that go to pin #5 and #6 wherever possible in the wiring harness without cutting. This would simulate the sensor detecting a leak and allow the shut-off valve(s) and ventilation (if applicable) function to be tested. If this method is used, ensure any disconnected wiring is reconnected and perform the reset procedure (in the following section) before finishing service/inspection.

Sensor Replacement

Replacement sensors should be of the same type and mounted in the original locations and orientation only.

- Max torque for screws is 6.2 lb-in (0.7 N-m)
- Mounting holes are sized for #10– #12 self-tapping sheet metal screws
- Recommended installation position is with connector down. When this is not possible, rotation up to 90 degrees left or right is acceptable.

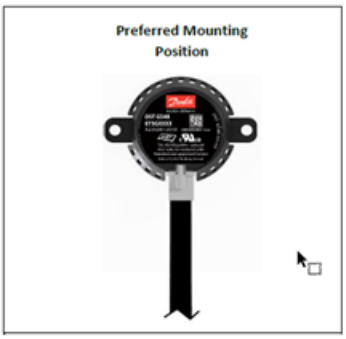

Mount Sensor with cable facing downward if possible. This is to minimize Water ingress from the cable and connector.



Alternative mounting if downward is not possible. Cable can exit 90 degrees from right or left side. Any angle from downward 0 degrees up to 90 degrees can be used.



Replacement Steps

1. Before replacing sensor, first ensure no refrigerant leak is detected and then that the power is off.
2. Remove two mounting screws from sensor.
3. Disconnect wires from relay and controller.
4. Attach new sensor in the same orientation and position with the previously removed screws.
5. Connect wiring to relay and controller per the wiring diagram.
6. Reconnect power. The refrigerant sensor should now run through the initialization process.

Sensor Reset Instructions (After Leak Event)

1. Verify Safe Conditions
   -Confirm that there is no active refrigerant leak and that the environment is safe to proceed.
   -Ensure all personnel involved are properly trained and authorized to perform reset operations.
2. Access Control Panel
   -Open the electrical control panel where the power for leak detection system is installed.
3. Locate the Toggle Switch
   -Inside the control panel, identify the designated switch assigned for the leak sensor power control.
4. Perform Power Cycle Reset
   -Flip the toggle switch to the OFF position to remove power from the leak detection sensor.
   -Wait approximately 5–10 seconds to allow the sensor and associated safety circuits to fully de-energize.
   -Flip the toggle switch back to the ON position to reapply power.
5. Confirm System Reset:
   -Verify that the sensor alarm has been cleared.
   -Confirm that all safety valves have returned to their normal operating state.
   -Observe the system for any abnormal indicators or alarm recurrence.

Component Replacement

Replacing Fan Motors and Blades

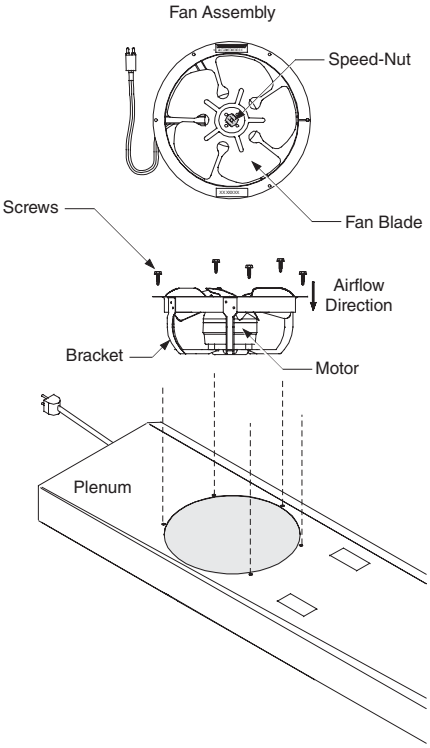

WARNING

Always disconnet the electrical power at the main disconnect when servicing or replacing any electrical component. This includes, but is not limited to, such items as doors, lights, fans, heaters, and thermostats.

The fan motor harness plug must be properly secured. This connection should only be disconnected or connected by a qualified contractor and only in the event of fan motor replacement.

See cross section in data sheet for location of evaporator fans. Should it ever be necessary to service or replace the fan motors or blades be certain that the fan blades are re-installed correctly.

For access to RL / RM / RLN / RMN / RLNI / RLNIE fans:

1. Turn off power at the breaker.
2. Remove bottom display pans.
3. Disconnect fan from wiring harness.
4. Remove screws holding fan motor/bracket assembly to plenum and remove assembly.
5. Replace fan motor/bracket assembly and reinstall screws.
6. Reinstall fan blade.
7. Turn on power.
8. Verify that motor is working and blade is turning in the correct direction.
9. Close large air gaps under fan plenum. Warmer air moving into refrigerated air reduces effective cooling. If the plenum does not rest against the case bottom without gaps, apply foam tape to the bottom of the fan plenum to reduce improper air movement, however defrost water should not be blocked by fan plenum. Do NOT seal fan plenum so that water can not drain.
10. Replace display pans.
11. Bring merchandiser to operating temperature before restocking.

Hussmann recommends against frame heater cycling with Innovator doors to prevent door seals from freezing to the frames and tearing.

Hussmann Corporation • Bridgeton, MO 63044-2483 U.S.A. • www.hussmann.com
U.S. & Canada 1-800-922-1919 • Mexico 800-890-2900

Replacing Fan Motors and Blades For RLTM Cases

⚠WARNING

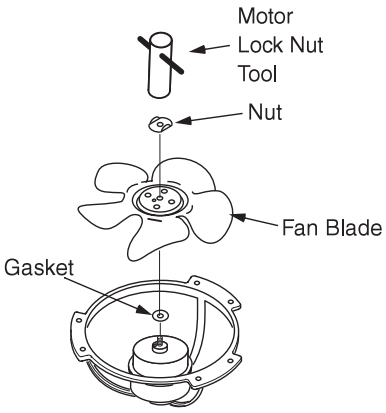

Always disconnet the electrical power at the main disconnect when servicing or replacing any electrical component. This includes, but is not limited to, such items as doors, lights, fans, heaters, and thermostats.

The fan motor harness plug must be properly secured. This connection should only be disconnected or connected by a qualified contractor and only in the event of fan motor replacement.

See cross section in data sheet for location of evaporator fans. Should it ever be necessary to service or replace the fan motors or blades be certain that the fan blades are re-installed correctly.

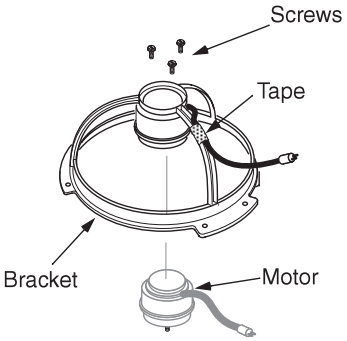

For access to RL / RM / RLN / RMN / RLNI / RLNIE fans:

1. Turn off power at the breaker.
2. Remove bottom display pans.
3. Disconnect fan from wiring harness.
4. Remove fan blade.
5. Lift fan plenum and remove screws holding bottom of motor to fan basket.
6. Replace fan motor and blade.
7. Lower fan plenum.
8. Reconnect fan to wiring harness.
9. Turn on power.
10. Verify that motor is working and blade is turning in the correct direction.
11. Close large air gaps under fan plenum. Warmer air moving into refrigerated air reduces effective cooling. If the plenum does not rest against the case bottom without gaps, apply foam tape to the bottom of the fan plenum to reduce improper air movement, however defrost water should not be blocked by fan plenum. Do NOT seal fan plenum so that water can not drain.
12. Replace display pans.
13. Bring merchandiser to operating temperature before restocking.

Hussmann recommends against frame heater cycling with Innovator doors to prevent door seals from freezing to the frames and tearing.

Replacing Electric Defrost Heaters for (RL / RLN / RLNI / RLNIE)

Electric defrost requires a heater on the front and rear of the coil as shown. The heaters are held in place by tabs in the coil brackets.

To replace the front defrost heater

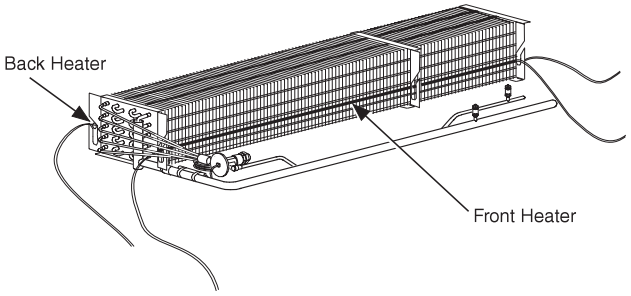

1. Turn off power at the breaker.
2. Lift fan plenum up and back to access the heater.
3. Bend tabs holding heater to horizontal.
4. Remove heater from coil bracket.
5. Position new heater in bracket.
6. Bend tabs back to vertical to hold heater in bracket.
7. Replace the coil cover and lower fan plenum.
8. Turn on power.
9. Verify that heater is working correctly.
10. Close air gaps under fan plenum. Warmer air moving into refrigerated air reduces effective cooling. If the plenum does not rest against the case bottom without gaps, apply foam tape to the bottom of the fan plenum to reduce improper air movement. Use silicone sealant to close other gaps.
11. Replace display pans. Bring merchandiser to operating temperature before restocking.

To replace the rear defrost heater

1. Disconnect Power.
2. Remove coil cover.
3. Remove clips holding heater to coil tube.
4. Remove heater from slots in coil bracket.
5. Position new heater in slots.
6. Replace clips.
7. Replace the coil cover.
8. Turn on power.
9. Verify that heater is working correctly.
10. Replace display pans.
11. Bring merchandiser to operating temperature before restocking.



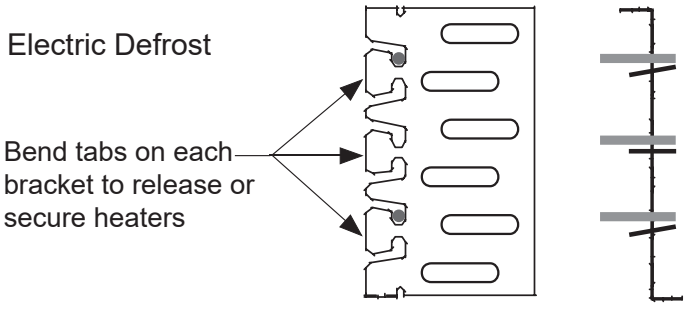

Replacing Electric Defrost Heaters for (RLTM)

RLTM electric defrost heaters are located in front of and behind the coil. Mounting brackets and supports are attached to plenum brackets.

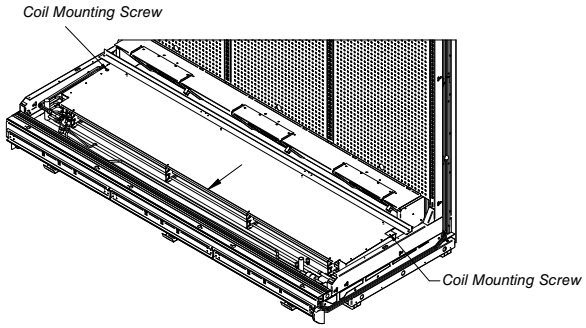

To replace the defrost heater:

1. Turn off power at the breaker.
2. Remove display pans.
3. Remove coil mounting screws and slide coil towards the front of the case.
4. Bend tabs holding heater to horizontal.
5. Remove heater from coil brackets.
6. Position new heater in brackets.
7. Bend tabs back to vertical to hold heater in bracket.
8. Push back in alignment with plenum baffles and reinsert coil mounting screws.
9. Turn on power.
10. Verify that heater is working correctly.
11. Close air gaps between the coil covers and the plenum baffles with silicone sealant.
12. Replace display pans. Bring merchandiser to operating temperature before restocking.

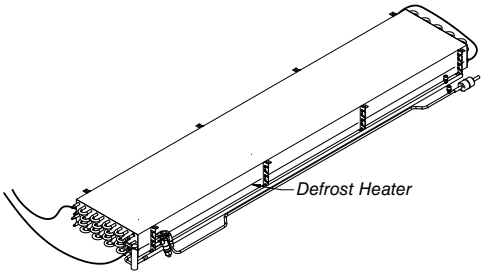

Replacing Drain Pan Heater Electric and Gas Defrost

(only for low temperature cases)

To replace the drain pan heater:

1. Turn off power at the breaker.
2. Pull heater out from under heater clips.
3. Position new heater under heater clips. Be sure offset is properly positioned around the drain.
4. Reconnect power.
5. Verify that heater is working correctly.

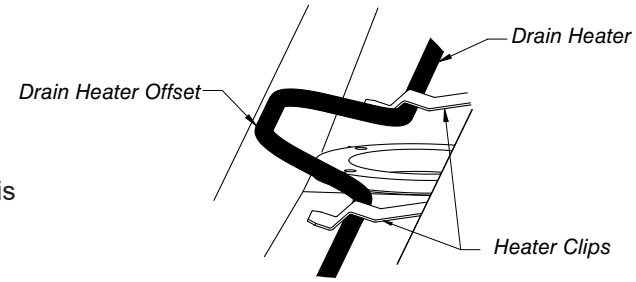

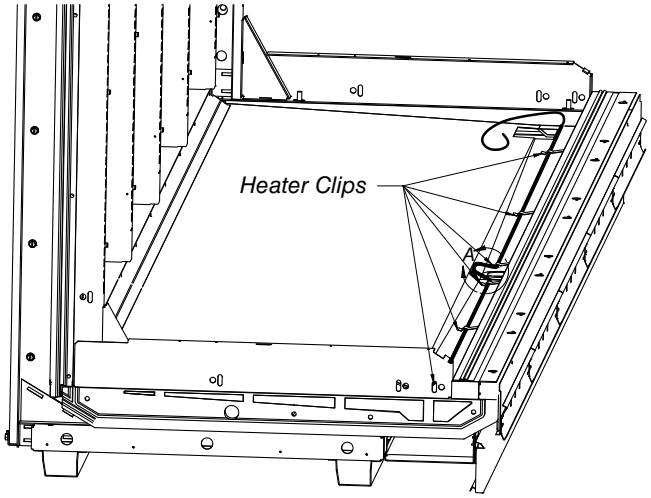

Servicing Vertical Lighting

For help with servicing vertical lighting, please refer to the door manufacturer's service manual.
If your case uses Innovator Doors, be sure to also use door manual P/N 0425683.
If your case uses EcoVision Doors (RMTD), use door manual P/N 3008521.

Servicing Doors and Frames

To service doors and frames, start with the door manufacturer's service manual. If your case uses Innovator Doors, be sure to also use door manual P/N 0425683. If your case uses EcoVision Doors (RMTD), refer to door manual P/N 3008521.

Replacing Door or Door Frame Parts

Parts for Reach-in doors and door frame assemblies must be ordered. This includes the glass doors, door frame assemblies, lamps, power supplies, door handles, hold open slides, and power cords. Refer to specific warranty supplied with the door. The manufacturers have a warranty against moisture penetration, a warranty against tempered glass breakage, and a warranty on power supplies. Lamps are not covered by Hussmann.

Replacing Damaged Drain Fitting

The following procedure is for the field repair of a broken drain fitting.

1. Use a drill with a 1 7/8-inch (48 mm) hole saw to drill out the bottom of the drain fitting. Be sure to drill completely through fitting and bottom liner.

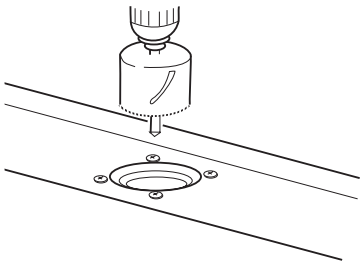

Drain Fitting Viewed from Inside Case

2. Insert adapter into drain fitting. Do NOT use thread sealer on ABS drain fitting. If sealer is used the ABS drain fitting may crack or leak! (Tee should be tightened no more than 4 turns.) Do not overtighten threads.

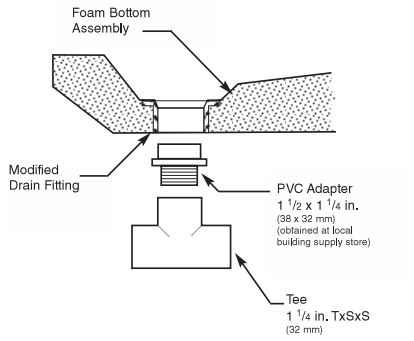

Do NOT use Thread Sealer on Drain Fitting!

End Section View

Impact® Reach-In

Maintenance and Service

Repairing Aluminium Coils

The aluminum coils used in Hussmann merchandisers may be easily repaired in the field. Materials are available from local refrigeration wholesalers.

Hussmann recommends the following solders and technique:

Solders

Aladdin Welding Products Inc.

P.O. Box 7188

1300 Burton St.

Grand Rapids, MI 49507

Phone: 1-800-645-3413

Fax: 1-800-645-3414

X-Ergon

1570 E. Northgate

P.O. Box 2102

Irving, TX 75062

Phone: 1-800-527-9916

Note:

Hussmann Aluminum melts at	1,125° F (607° C)
Aladdin 3-in-1 rod at	732° F (389° C)
X-Ergon Acid core at	455° F (235° C)

Technique:

1. Locate Leak.
2. Remove all pressure.
3. Brush area under heat.
4. Use prestolite torch only.number 6 tip.
5. Maintain separate set of stainless steel brushes and use only on aluminum.
6. Tin surface around area.
7. Brush tinned surface under heat, thoroughly filling the open pores around leak.
8. Repair leak. Let aluminum melt solder, not the torch.
9. Don’t repair for looks. Go for thickness.
10. Perform a leak check.
11. Wash with water.
12. Cover with a good flexible sealant.

Decommissioning Process

Before carrying out this procedure, it is essential that the technician is completely familiar with the equipment and all its details. It is recommended good practice that all refrigerants are recovered safely. Prior to the task being carried out, an oil and refrigerant sample should be taken in case analysis is required prior to re-use of recovered refrigerant. It is essential that electrical power is available before the task is commenced.

a. Become familiar with the equipment and its operation.
b. Isolate the system electrically.
c. Before attempting the procedure, ensure:
   i. Mechanical handling equipment is available, if required, for handling refrigerant cylinders.
   ii. All personal protective equipment is available and being used correctly.
   iii. The recovery process is supervised at all times by a qualified, competent person.
   iv. Recovery equipment and cylinders conform to the appropriate standards.
d. Pump down refrigerant system, if possible.
e. If a vacuum is not possible, make a manifold so that refrigerant can be removed from various parts of the system.
f. Make sure that cylinder is situated on the scales before recovery takes place.
g. Start the recovery machine and operate in accordance with instructions.
h. Do no overfill cylinders (no more than 80% volume liquid charge).
i. Do not exceed the maximum working pressure of the cylinder, even temporarily.
j. When the cylinders have been filled correctly and the process completed, make sure that the cylinders and the equipment are removed from site promptly and all isolation valves on the equipment are closed off.
k. Recovered refrigerant shall not be charged into another refrigerating system unless it has been cleaned and checked.

Equipment shall be labeled stating that it has been decommissioned and emptied of refrigerant. The label shall be dated and signed. For appliances containing flammable refrigerants, ensure that there are labels on the equipment stating the equipment contains flammable refrigerant.

Notes:

Hussmann Corporation • Bridgeton, MO 63044-2483 U.S.A. • www.hussmann.com
U.S. & Canada 1-800-922-1919 • Mexico 800-890-2900

Warranty

To obtain warranty information or other support, contact your Hussmann representative or visit: https://www.hussmann.com/services/warranty.

Please include the model and serial number of the product.

For questions about your equipment, please contact our Technical Support Team at 1-866-785-8499

For general support or service calls, contact our Customer Support Call Center at 1-800-922-1919

For ordering aftermarket warranty parts, call 1-855-HussPrt (1-855-487-7778) or email the following address: Hussmann_part_warranty@hussmann.com

---

Revision History

Revision Y: Redesign; added A2L refrigerants
Revision W: November 2024; Updated for UL 60335
Revision V: February 2017; Page 1-1, Added Additional Statement to Fed. / State Regulations; Ambient Conditions note, Page 4-1
Revision U: December 2016; Page 1-24, Added Splashguard Brackets for RMT

Scan the QR code on your mobile device to access additional product information or order parts using equipment serial number.

Parts may also be ordered at:
parts.hussmann.com
Call toll free: 1.855.487.7778

We reserve the right to change or revise specifications and product design in connection with any feature of our products. Such changes do not entitle the buyer to corresponding changes, improvements, additions or replacements for equipment previously sold or shipped.

©2025 Hussmann Corporation • Bridgeton, MO 63044-2483 U.S.A.
U.S. & Canada 1-800-922-1919 • Mexico 800-890-2900 • www.hussmann.com

Spanish P/N 0517045
French P/N 0527085