VIKING
Viking Range, LLC
111 Front Street
Greenwood, Mississippi 38930 USA
(662) 455-1200

For product information
call 1-888-(845-4641),
or visit the Viking Web site at
vikingrange.com

F21338 EN (123113)

VIKING PROFESSIONAL

Use & Care Manual

Professional/Custom Panel Built-In All Refrigerator/Freezer

Congratulations

Congratulations and welcome to the elite world of Viking ownership. We hope you will enjoy and appreciate the care and attention we have put into every detail of your new, state-of-the-art appliance.

Your unit is designed to offer years of reliable service. This Use and Care Guide will provide you with the information you need to become familiar with your appliance's care and operation.

Your complete satisfaction is our ultimate goal. If you have any questions or comments about this product, please contact the dealer from whom you purchased it, or contact our Consumer Support Center at 1-888-845-4641

We appreciate your choice of a Viking appliance and hope that you will again select our products for your other major appliance needs.

For more information about the complete and growing selection of Viking products, contact your dealer or visit us online at vikingrange.com.



Warnings

⚠ WARNING

To reduce the risk of fire, electric shock, or injury when using your unit, follow these basic precautions:

- Read all instructions before using the unit.
- Never allow children to operate, play with, or crawl inside the unit.
- Never clean unit parts with flammable fluids. The fumes can create a fire hazard or explosion.
- Always turn the power on/off switch (located behind the air grille on top right side) to the OFF position before attempting to change light bulbs, clean, or service the unit.

FOR YOUR SAFETY

DO NOT STORE OR USE GASOLINE OR OTHER FLAMMABLE VAPORS AND LIQUIDS IN THE VICINITY OF THIS OR ANY OTHER APPLIANCE. THE FUMES CAN CREATE A FIRE HAZARD OR EXPLOSION.

⚠ WARNING

ELECTRICAL SHOCK HAZARD



Plug into a grounded 3-prong outlet.
If a 2-prong wall receptacle is encountered, contact a qualified electrician.
Do not remove ground prong.
Unit must be grounded at all times.
Do not use an adapter.
Do not use an extension cord.
Failure to follow these instructions can result in death, fire, or electrical shock.

Your safety is important to us. This use and care manual contains safety symbols and statements. Please pay special attention to these symbols and follow any instructions given.

⚠ This symbol alerts you to hazards such as fire, electrical shock or other injuries.

Warnings

⚠ WARNING

To avoid electrical shock which can cause severe personal injury or death, turn power disconnect switch to OFF before cleaning. After cleaning, return power disconnect switch to ON position.

⚠ WARNING

ELECTRICAL SHOCK HAZARD

Disconnect power or turn power disconnect switch to OFF position before removing top grille. Failure to do so can result in death or electrical shock.



⚠ WARNING

BURN HAZARD

Do not touch condenser coils near defrost pan.
Doing so can result in burns.



⚠ DANGER

RISK OF CHILD ENTRAPMENT

Before You Throw Away Your Old Refrigerator or Freezer:

- Take off the doors.
- Leave the shelves in place so that children may not easily climb inside.

IMPORTANT: Child entrapment and suffocation are not problems of the past. Junked or abandoned refrigerators are still dangerous... even if they will sit for "just a few days."

Table of Contents

Getting Started

Important Safety Instructions ____ 6
Proper Disposal (of old appliance) ____ 6
Features ____ 7

Product Controls

Settings and Functions ____ 10

Operation

All Refrigerator ____ 14
All Freezer ____ 18
Automatic Ice Maker ____ 19
Food Storage Guide ____ 21

Product Care

Cleaning and Maintenance ____ 23
Troubleshooting ____ 28
Service Information ____ 31
Warranty ____ 32

Important Safety Instructions

- Install and level your applianceon a floor that will hold its weight, plus food weight (approximately 1200 pounds [540kg]) and in an area suitable for its size and use.
- Do not install a near a heat source, nor in a location where the surrounding temperature will fall below 60° F (16° C).
- Do not allow your appliance to be exposed to the weather or outdoor elements.
- Connect your unit only to the appropriate kind of electrical outlet, with the correct power supply and grounding. (Refer to the Electrical Requirements section of the Installation Instructions.)
- Use the appliance only for the uses described in this manual.
- Properly maintain the appliance.
- Be sure the unit is not used by anyone unable to operate it properly.

Proper Disposal
(of old appliance)

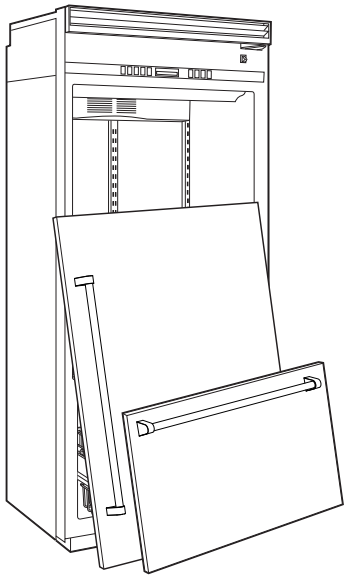

IMPORTANT:
Now that you have a new appliance, it is extremely important that you dispose of your old appliance in a way that minimizes the possibility that children will find it. There have been many cases in years past of children crawling inside junked and abandoned refrigerators and becoming trapped or suffocated.

Contact your municipal waste disposal authority to find out the best and safest way to dispose of your old unit.

⚠ DANGER

RISK OF CHILD ENTRAPMENT

Before You Throw Away Your Old Refrigerator or Freezer:

- Take off the doors.
- Leave the shelves in place so that children may not easily climb inside.

General Features

Getting Started

- **ProChill™ Temperature Management System**
  The variable speed DC Overdrive™ compressor is one of the quietest, most technologically advanced compressors available. Electronic controls with digital temperature readouts, maintain temperatures and the multi-channel airflow system and Odor Eliminator™ evaporator remove odors and excess humidity.

- **Plasmacluster™* Ion Air Purifier (All Refrigerator)**
  The Plasmacluster™ Ion Air Purifier uses ions to eliminate airborne bacteria and mold spores, remove odors and enhance food preservation. Because of the unique technology, the Plasmacluster™ will continue to keep the refrigerator bateria and mold free without ever having to be replaced.

- **Adjustable Cold Zone™ Drawer (All Refrigerator)**
  Equipped with a separate temperature control, the Adjustable Cold Zone™ Drawer can be set for either produce or long-term fresh meat storage.

- **Adjustable Humidity Zone™ Drawers (All Refrigreator)**
  Equipped with an adjustable humidity control, the Adjustable Humidity Zone™ drawers can be set on the high setting for leafy greens or the low setting for fruits and vegetables with skins.

- **Super Clog-Resistant™ Condenser**
  The pin and tube design of the condenser coil prevents dust and other airborne particles from clogging the condenser. Under normal operation, the condenser is maintenance-free.

- **Tru-Flush™ Design**
  Keeps items in back within easy reach and allows refrigerator to fit flush into 24" deep installation cutout (Professional Integrated and Custom Panel models).

*Plasmacluster is a trademark of Sharp Corporation.

Features (built-in all refrigerator)

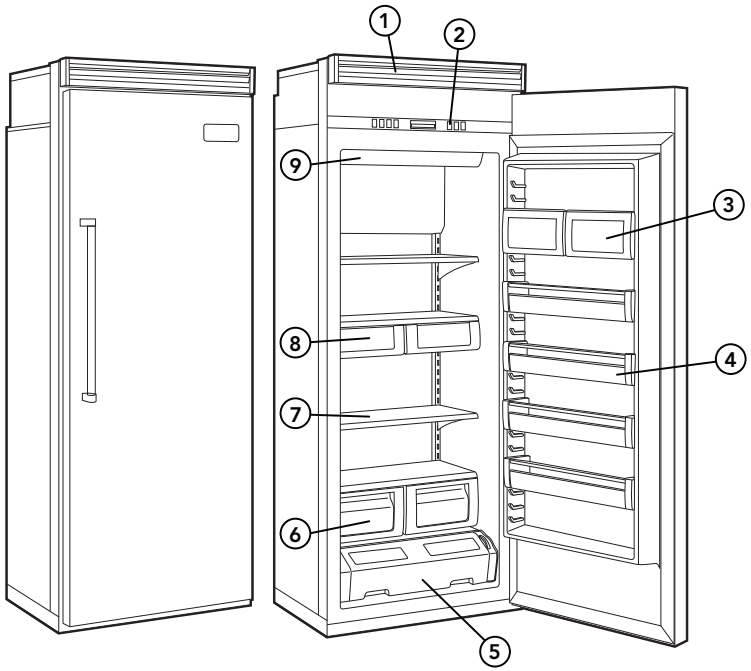

30" W. Model Shown

1. Variable Speed DC Overdrive™ Compressor and Super Clog-Resistant™ Condenser
2. Electronic Controls with digital temperature readouts
3. Dairy Compartments (2)
4. Adjustable Door Bins (Patent Pending)
   30" W. Models–
   Full-Width (4)
   36" W. Models–
   Half-Width (2)
   Full-Width (3)
5. Adjustable Cold Zone™ Drawer
6. Adjustable Humidity Zone™ Drawers (2)
7. Spillproof Shelves
   -2 Full Width Spillproof Plus Shelves with Nano Technologyy
   -2 Full Width Spillproof Shelves
8. Deli Compartment Drawers (2)
9. LED Lights

Features (built-in all freezer)

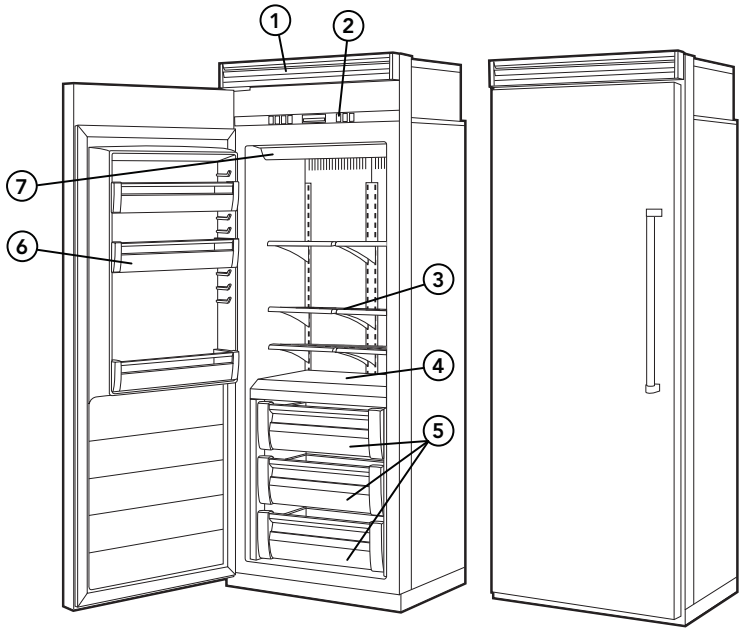

30" W. Model Shown

1. Variable Speed DC Overdrive™ Ccompressor and Super Clog-Resistant™ Condenser
2. Electronic Controls with digital temperature readouts
3. Wire Shelves (6)
4. Non-Adjusting Freezer Shelf (1)
5. Patented Modular Storage System
   - Gliding Ice Drawer with 2 Ice Bins
   - Gliding Freezer Baskets (2)
6. Adjustable Door Bins (Patent Pending)
   30" W. Models–
   Full-Width Bins (3)
   36" W. Models–
   Full-Width Bin (1)
   Half-Width Bins (4)
7. LED Lights

In order for your new appliance to work properly, it is important that you understand its various features, controls, and how to use them.

Power On/Off Switch (Power Interruption Switch)

The power on/off switch is located behind the top grille. It is used to turn the power off when cleaning. Your appliance arrives from the factory with the power interruption switch on.

To turn power off, remove the center grille blade. Press the power on/off switch to the off position.

To turn power on, press power on/off switch to the on position. Replace the center grille blade.

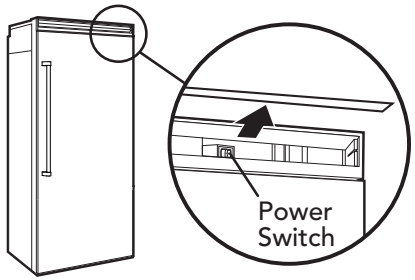

IMPORTANT: Be sure the power on/off switch is in the on position after cleaning

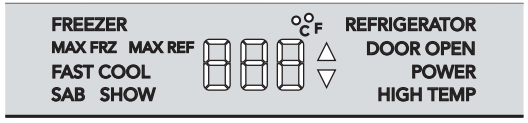

Showroom Mode Initiation

Showroom mode allows electronic controls and interior lights to function independently of refrigeraton system.



To enter the showroom mode: Press and hold "ACTIVATE CONTROLS" pad; while holding, press and hold the "HIGHER" and "ALARM OFF" pads together for 3 seconds. Three beeps will sound and SHOW will be lit. Showroom mode is entered.

To exit the showroom mode: press and hold "ACTIVATE CONTROLS" pad; while holding, press and hold the "HIGHER" and "ALARM OFF" pads together. Three beeps will sound and control will revert to normal operation and display.

Settings and Functions

Product Controls

Electronic Temperature Settings



The electronic controls are located behind the door above the cabinet interior. To activate the electronic control panel, press "ACTIVATE CONTROLS" pad. All other pads, except the "ALARM OFF" pad, will remain inactive until the "ACTIVATE CONTROLS" pad is pressed. Once activated, pad remains programmable for at least ten minutes.

When you first plug your new appliance in, you will find that the refrigerator factory setting is 38° F and the freezer factory setting is 0° F. Wait 24 hours after plug-in to reach this setting. After 24 hours, you may adjust controls as desired.

To change from °F to °C, press and hold "ACTIVATE CONTROLS" then press and hold "ALARM OFF" for 3 seconds. To change back, follow the same steps.

To adjust the refrigerator or freezer temperature, simply press the "ACTIVATE CONTROLS" pad, then "REF TEMP" pad or "FRZ TEMP" pad. Press the "HIGHER" or "LOWER" pad to adjust temperature setting one degree at a time.

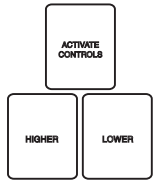

NOTE: Allow 24 hours for temperature to reach desired setting after any change in set temperature.

Entry Tone



The entry tone is the "beep" you will hear when you press the control pad. You can deactivate the entry tone by pressing and holding the "ACTIVATE CONTROLS" pad for three to five seconds. You will hear three short beeps to let you know that the entry tone feature has been deactivated.

To activate the entry tone, simply press and hold the "ACTIVATE CONTROLS" pad for three to five seconds.

Fast Cool (All Refrigerator)

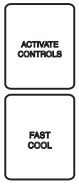

Fast Cool runs the compressor at high speed for 2 hours to cool the refrigerator as quickly as possible. After 2 hours, the refrigerator will return to the previous setting.

To activate fast cool, press "ACTIVATE CONTROLS" followed by the "FAST COOL" pad. The fast cool light will be lit.

Max Refrigerator Mode (All Refrigerator)



Max refrigerator mode adjusts the refrigerator temperature to the coldest setting for four hours, at the end of which the refrigerator's temperature automatically returns to its previous setting.



To activate the max refrigerator mode, simply press the "ACTIVATE CONTROLS" pad, followed by the "MAX REF" pad. The "MAX REF" light will glow to let you know you've turned on the max refrigerator mode.

To deactivate the max refrigerator mode before the end of the four hour cycle, press the "ACTIVATE CONTROLS" pad, followed by the "MAX REF" pad.



Max Freezer Mode (All Freezer)

Max freezer mode adjusts the freezer temperature to the coldest setting for 6 hours, at the end of which, the freezer temperature automatically returns to its previous setting.

To activate the max freezer mode, press the "ACTIVATE CONTROLS" pad, followed by the "MAX FRZ" pad. The "MAX FRZ" light will glow to let you know you have turned on the max freezer mode.

To deactivate the max freezer mode before the end of the 24 hours cycle, simply press the "ACTIVATE CONTROLS" pad, followed by the "MAX FRZ" pad.

Door Open Alarm

Door open alarm sounds and the "DOOR OPEN" light blinks if either door is left open for more than three minutes.



To deactivate the door open alarm, press the "ALARM OFF" pad or close the door that is open.

High Temperature Alarm

High temperature alarm sounds and the "HIGH TEMP" light glows if the refrigerator or the freezer temperature is too high for two hours. A blinking light signals which part of the appliance is affected. The alarm sound will end when the temperature is brought back to a proper setting.



To deactivate the high temperature alarm, press the "ALARM OFF" pad.

Power Loss Alarm

No alarm sounds, however, the "POWER" indicator flashes indicating a power loss. Press "ALARM OFF" to clear.

Settings and Functions

Product Controls

Temperature Sensor Alarm

Temperature sensor alarm is a special feature that electronically senses temperature sensor problems. The temperature sensor alarm will sound and the display will show either oPn or Shr. The alarm can be deactivated by pressing the "ALARM OFF" pad on your refrigerator's control panel. **If the display does not return to showing the temperature, contact an authorized technician immediately.**

Display



To activate temperature display, press the "ACTIVATE CONTROLS" pad.

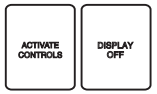

To deactivate temperature display, press the "ACTIVATE CONTROLS" pad, followed by the "DISPLAY OFF" pad.

Sabbath Mode

Sabbath mode is used to disable interior lights and alarms for observance of the Sabbath.

Before the Sabbath mode is engaged, the bale arm of the ice maker (All Freezer models) needs to be raised until it clicks into the detent. This turns off the power to the ice maker.



To enter Sabbath mode, press the "ACTIVATE CONTROLS" pad to activate the control panel. Then, press and hold "ACTIVATE CONTROLS" and "DISPLAY OFF" pads simultaneously for three seconds. It will beep three times and light the SAB indicator so you will know that you have activated Sabbath mode.



When your appliance is in Sabbath mode, interior lights, display (excluding SAB indicator, temperature, and compartment indicator), and alarms are disabled.

If your appliance loses power while in Sabbath mode, it will return to the Sabbath mode when power is reestablished.



To exit the Sabbath mode, press the "ACTIVATE CONTROLS" pad. Then, press and hold "ACTIVATE CONTROLS" and "DISPLAY OFF" pads simultaneously for three seconds. You will then hear three beeps letting you know that you have turned the Sabbath mode off.

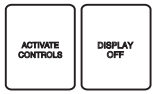

Once your appliance has left the Sabbath mode, the bale arm of the ice maker (All Freezer models) needs to be pushed downward until it is no longer in the detent. This will restore power to the ice maker.

Spillproof Plus Shelves with Nano Technology

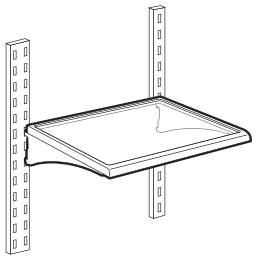

Some refrigerator models include Spillproof Plus shelves. These spillproof shelves contain liquids with no raised edges in order to provide extra shelf capacity.

Standard Spillproof Shelves

Standard spillproof shelves are constructed of polypropylene molded around the glass and metal rail. This design means that the shelves are completely enclosed and liquids can't seep under the glass. This localizes spills and makes clean-up easier.

NOTE: *Foods and beverages placed on the uppermost shelf under the air vent may freeze.*

Shelf Adjustment

You can adjust the shelves to match the way you use your refrigerator. To remove the shelves, tilt the shelf up at the front releasing the hooks from the shelf support, then pull the shelf straight out.

To replace shelves, guide the rear hooks of the shelf into the slots in the shelf supports. Then, tilt the shelf up at the front until the hooks drop into the slots, and lower the front of shelf to level position.

⚠ CAUTION

To avoid personal injury and property damage, confirm shelf is secure before placing items on shelf.

⚠ CAUTION

To avoid personal injury or property damage, handle tempered glass shelves carefully. Shelves may break suddenly if nicked, scratched, or exposed to sudden temperature change.

All Refrigerator

Door Bin Adjustment

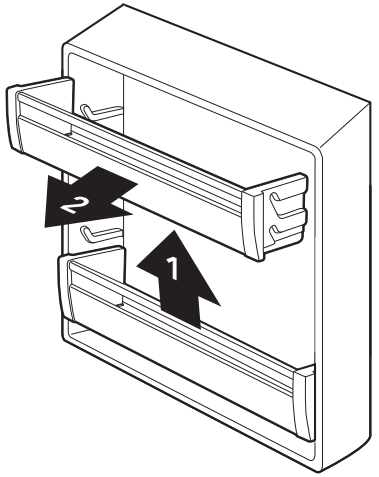

Your appliance's door bins hold two-liter bottles and can be placed in any position on the door. To remove a bin, simply grasp it, lift the bin up, and pull it out.

To replace the bin, place it over the glides in the door, and push the door bin down to lock it into place.

Dairy Compartments

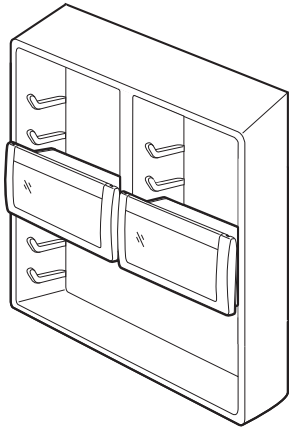

Your dairy compartment doors are surrounded by gaskets for a tighter seal. This allows items to stay fresh much longer. The dairy compartments can be adjusted to meet your unique storage needs.

To remove the dairy compartments, simply grasp, lift up and pull out. To replace, position the dairy compartment over the glides in the door, and push the compartment down to lock it into place.

Adjustable Humidity Zone™ Drawers

The moisture control on your produce drawers gives you the ability to change the amount of moisture or humidity in a drawer.

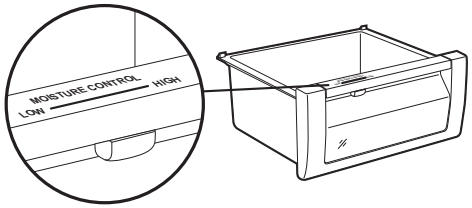

The moisture control is located underneath the front trim. Slide the control to a higher setting for storing produce with leaves, such as lettuce, spinach, or cabbage. Slide the control to a lower setting for storing fruits and vegetables with skins, such as apples, corn, or tomatoes. See "Food Storage Guide" (pg. 30) for more information on storing foods properly.

To remove drawer, roll the drawer out to the stop. Then, on each side of the drawer, locate the black leveler on the glides and lift up until the drawer disengages from the glides. Pull the drawer out the rest of the way. To replace the drawer, extend the glides out to the stop. Next, place the drawer onto the glides and push it back until the drawer engages the hook. Lower the front part of the drawer, grasp the glides/drawer and lightly squeeze until the drawer snaps onto the glides. Then slide the drawer back until it stops.

Egg Bin

Your refrigerator's egg bin has three pieces: the lid, the egg tray, and the bin. The egg bin can hold up to two dozen eggs.

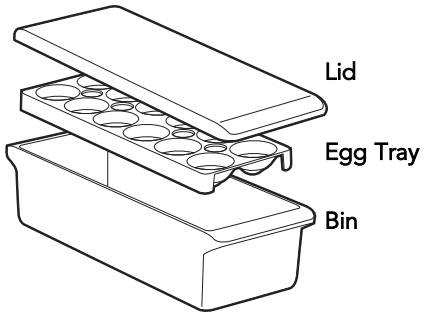

To hold one dozen eggs, place twelve eggs into the egg carrier. Then place the egg carrier into the bin and cover with the lid.



With two dozen eggs, place twenty-four eggs loose in the bin and cover them with the lid. Use the carrier to transport eggs between the bin and your cooking area.

When the egg tray is removed, the bin will accept items such as a standard egg carton, ice, etc.

All Refrigerator

Adjustable Cold Zone™ Drawer



Your new refrigerator features an Adjustable Cold Zone™ Drawer. Freezer air is contained by gaskets in the air duct above the drawer. This area keeps food 3° to 5° colder than average refrigerator temperatures.

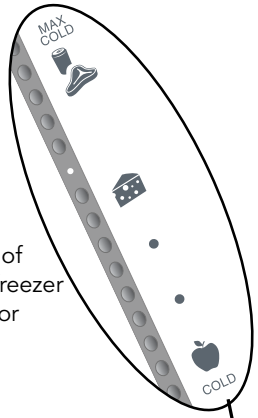

The temperature control is located to the right of the drawer. The control adjusts the amount of freezer air circulating in this area. For normal refrigerator temperature for storing fruits and vegetables with skins such as apples, corn, or tomatoes, slide the control down. For increasingly colder temperatures, slide the control up. The uppermost control position is perfect for storing meats or chilling beverages.

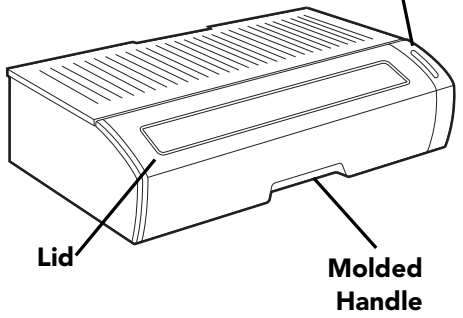

Your refrigerator's drawer glides forward on an inner and outer track, and the lid raises for easy access. This special feature holds extra-large deli trays, wine bottles, etc. The lid can also be removed for tall items such as tiered cakes and flower arrangements. To open the drawer, simply grasp the molded handle and pull forward.

To remove drawer, roll drawer out to the stop. Remove lid by lifting to release hooks then pulling out. Remove the drawer by lifting slightly and pulling out.

To replace, position drawer rollers behind the track roller. Push drawer up and onto the track. Slide drawer back slightly. Replace cover by inserting hooks into drawer then placing back and front down. Slide drawer back until it stops.

Door Bin Adjustment

Your appliance's door bins hold two-liter bottles and can be placed in any position on the refrigerator door. To remove a bin, simply grasp it, lift the bin up, and pull it out.

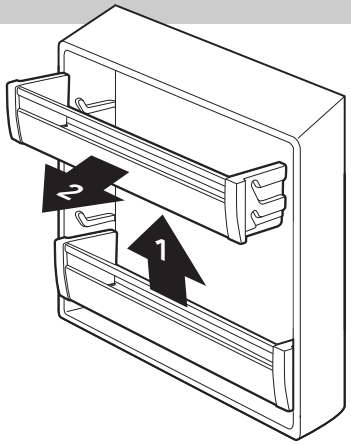

To replace the bin, place it over the glides in the door, and push the door bin down to lock it into place.

Wire Shelf Adjustment

You can easily adjust your freezer's shelves. To remove a shelf, simply tilt it up at the front, releasing the hooks from the shelf support. Then, pull the shelf straight out. To replace, guide the rear hooks of the shelf into the slots in the shelf supports. Then, tilt the shelf up at the front until the hooks drop into the slots. Next, lower the front of the shelf to a level position.

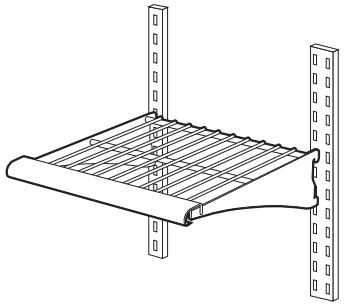

Wire Basket Adjustment

You can easily adjust your freezer's wire baskets by moving the dividers. To remove a divider, simply grasp it in the center, and pull the divider straight up. To replace, guide the divider around the basket wires in the desired location, then push the divider down until it stops.

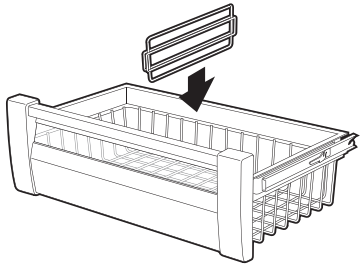



The ice maker and slide-out ice drawer on your refrigerator are not adjustable, but the ice drawer slides forward for easy access to ice.



After the freezer reaches normal temperature, the ice maker fills with water and begins operating. Under normal conditions, the ice maker will produce seven to nine batches of ice per 24 hour period.

NOTE: *Allow 24 to 48 hours after installation before looking for ice in your ice drawer. You should discard the first three full drawers of ice and should also throw out the first drawer full of ice after extended periods of non-use.*

During ice production, the ice maker arm raises and lowers. When the ice bin is full, the ice maker arm automatically turns the ice maker off. To manually stop ice production, raise the ice maker arm. You will hear a definite click when you have the arm in the right position. The ice maker won't produce any more ice until you lower the ice maker arm.

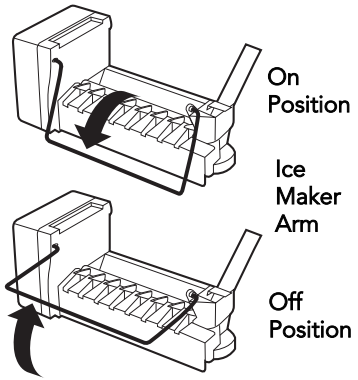

⚠ CAUTION

To avoid damage to ice maker, observe the following:
- Do not force ice maker arm down or up past stop position.
- Do not place or store anything in ice bucket.

Automatic Ice Maker (All Freezer)

Ice Bin Adjustment

Ice bins can be adjusted to match the way you use your freezer. The ice bin on the left-hand side is used for collecting ice from the ice maker. Once the left-hand ice bin is full, the bins can be reversed so additional ice is made. If the ice maker is not operating, the ice bin can be used for cold storage.

To remove ice bins, extend ice drawer fully. Place hand underneath ice bin. Push ice bin upward. Grab ice bin edge and lift upward. Store ice bin in safe place.

To replace ice bins, lower ice bin in cutout on drawer frame. Adjust forward or backward as needed.

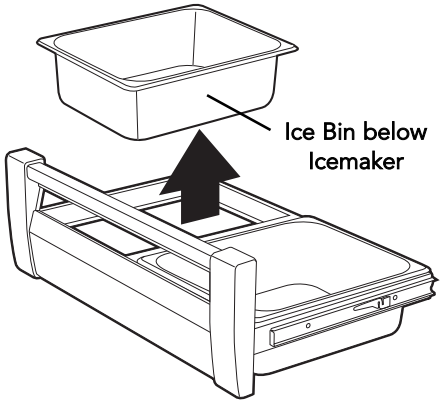

Food Storage Guide

Storing Fresh Food (All Refrigerator)

Wrap or store food in the refrigerator in airtight and moisture-proof material. This prevents food odor and taste transfer. For dated products, check use-by date to ensure freshness.

To store leafy vegetables, remove store wrapping. Then tear off bruised and discolored areas. Wash the vegetables in cold water and drain, and then place them in a plastic bag or plastic container and store in your produce drawer.

For vegetables with skins, such as carrots and peppers, store in plastic bags or containers.

When refrigerating fruit, wash the fruit and then let it dry. Store the fruit in plastic bags. Don't wash or hull berries until they are ready to use. Instead, sort and keep berries in their original container in the produce drawer, or store in a loosely closed paper bag on the refrigerator shelf.

Store eggs without washing them. Keep eggs in their original carton or in your refrigerator's egg bin.

Wipe milk cartons. For best storage, place milk on an interior shelf.

Keep opened butter in covered dish or closed compartment. When storing butter in the freezer, wrap it in freezer packaging.

When you have leftovers, cover then with plastic wrap, aluminum foil, or store the leftovers in plastic containers with tight lids.

Store meat in its original wrapping, as long as it's airtight and moisture-proof. Rewrap meat if necessary.

NOTE: *When storing meat longer than the recommended times, freeze the meat.*

The Adjustable ColdZone™ drawer is ideal for longer term meat storage because the temperature can be set 3˚ to 5˚ colder.

Recommended storage times:

Chicken	1-2 days	Bacon	5-7 days
Ground Beef	1-2 days	Cold Cuts	3-5 days
Steaks/Roasts	3-5 days	Variety Meats	1-2 days
Cured Meats	7-10 days		

NOTE: *Use fresh fish and shellfish the same day as purchased.*

Food Storage Guide

Packaging Food for Freezing (All Freezer)

The secret of successful freezing is in the packaging; the way you close and seal a package of food must not allow air or moisture in or out, or the quality of the food will deteriorate while frozen.

Packaging you should not use for freezing includes:

- Bread wrappers
- Non-polyethylene plastic containers
- Containers without lids
- Wax paper or wax-coated freezer wrap
- Thin, semi-permeable wrap

Recommended packaging:

- Rigid plastic containers with tight-fitting lids
- Straight-sided canning/freezing jars
- Heavy-duty aluminum foil
- Plastic-coated paper
- Non-permeable plastic wraps (made from saran film)
- Zip-top freezer bags

Follow package or container instructions for proper freezing methods.

Freezing Foods (All Freezer)

Do not expect your freezer to quick-freeze large quantities of food; do not load more than two to three pounds of unfrozen food per cubic foot within 24 hours. Leave enough space for air to circulate around packages, and be careful to leave enough room at the front so the freezer door can close tightly.

A full freezer stays cold longer than a partially filled one, and a freezer full of meat stays cold longer than a freezer full of baked goods. If food contains ice crystals, it may be safely refrozen, although the quality and flavor may be affected. If the condition of the food is poor, or if you feel it is unsafe, dispose of it.

Storage times will vary according to the quality of food, the type of packaging or wrap used (airtight and moisture-proof), and the storage temperature, which should be 0° to 2° F (-18° to -17° C).

Cleaning and Maintenance

⚠ CAUTION

To avoid personal injury or property damage, read and follow all cleaning product manufacturer's directions.

⚠ WARNING

To avoid electrical shock which can cause severe personal injury or death, turn power disconnect switch to OFF before cleaning. After cleaning, return power disconnect switch to ON position.

Your appliance is built to give you many years of dependable service. However, there are a few things you can do to help extend its life. This section tells you how to clean your appliance and what to do when going on vacation, moving, or during a power outage.

Interior Surfaces

Wash the interior surfaces with four tablespoons of baking soda dissolved in one quart of warm water. Use a soft, clean cloth. Rinse these surfaces with warm water, and dry with a soft clean cloth.

Do not use the following to clean interior surfaces:

- Abrasive or harsh cleaners, such as ammonia or chlorine bleach
- Concentrated detergents or solvents
- Metal scouring pads

These products can scratch, crack and discolor your appliance's surfaces.

Also, never wash the ice bucket or shelves in the dishwasher. They must be cleaned by hand.

Cleaning Chart

Part	What to Use	How to Clean
Removable parts (shelves, drawers)	Sponge or cloth with mild detergent and warm water	Hand wash, rinse, and dry thoroughly.
Front door panels • Stainless steel	Stainless steel cleaner	Wipe with soft cloth.
• Painted	Sponge or cloth with mild detergent and warm water	Hand wash, rinse, and dry thoroughly.
Interior walls (allow freezer to warm up so cloth will not stick)	Sponge, soft cloth or paper towel with baking soda or or mild detergent and warm water	Hand wash, rinse, and dry thoroughly.
Door liners and gaskets	Sponge, soft cloth or paper towel with mild detergent and warm water **Do not use cleaning waxes, concentrated detergents, or cleaners containing chlorine bleach**	Wash, wipe and dry thoroughly.
Plastic parts (covers, panels)	Soft, clean sponge or soft clean cloth with mild detergent and warm water **Do not use paper towels, window sprays, or scouring pads. These can scratch and damage the finish.**	Wash, wipe and dry thoroughly.
Super Clog-Resistant™ Condenser*	Vacuum cleaner with extended narrow attachment	Vacuum coils when dusty or dirty.

*Under normal conditions, condenser is maintenance-free.

Cleaning and Maintenance

Glass Shelves (All Refrigerator)

To clean your refrigerator's glass shelves, lift the shelf out by lifting the front and releasing the hooks from the metal track. Then pull the shelf out. Be sure to allow the glass shelves to adjust to room temperature before cleaning.

To clean crevices, dilute mild detergent with water. Brush this solution into crevices using a plastic bristle brush. Let set for five minutes. Spray warm water into crevices using faucet spray attachment. Dry glass shelf thoroughly and replace shelf by inserting hooks into metal track and lowering front.

Door Gaskets

Clean the door gaskets every three months using the same procedures used for interior surfaces. You should apply a light film of petroleum jelly to keep gaskets pliable.

⚠ CAUTION

To avoid personal injury or property damage, handle tempered glass shelves carefully. Shelves may break suddenly if nicked, scratched, or exposed to sudden temperature changes.

⚠ WARNING

ELECTRICAL SHOCK HAZARD

Disconnect power or turn power disconnect switch to OFF position before removing top grille. Failure to do so can result in death or electrical shock.



⚠ WARNING

BURN HAZARD

Do not touch condenser coils near defrost pan.
Doing so can result in burns.



Door Stop Adjustment

Your appliance is factory set at the 110° door stop position. To change to either the 90° or 120° position, remove the door stop pin using a 3/16" allen wrench.

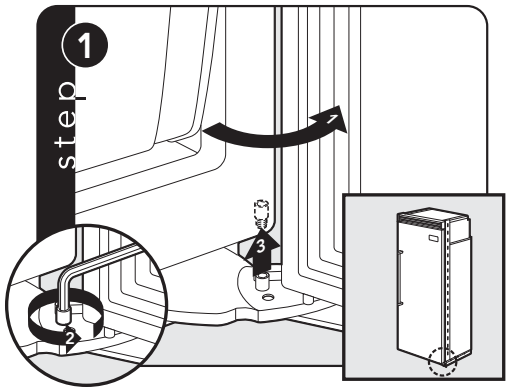

Open appliance door so door stop and shoulder screw are accessible.

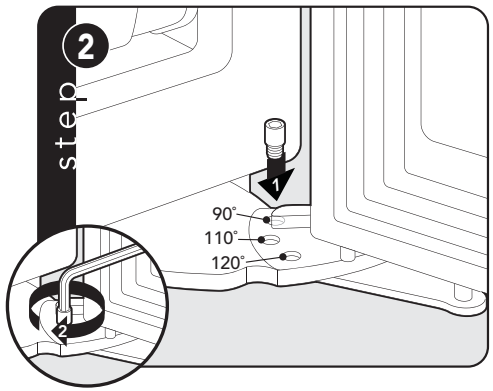

Remove shoulder screw and place in 90° or 120° position.

Cleaning and Maintenance

Saving Energy

You can help your appliance use less electricity with these simple tips:

- Open the door as few times as possible. Think about what you need before you open the door. Get everything out at one time. Keep food organized so you will not have to search for what you want. Close door as soon as food is removed.
- Do not overcrowd the unit so air movement is blocked.
- Do not set the unit to temperature colder than necessary.

Vacation Tip

When you will be gone from home a short time (less than four weeks), there is no need to shut off your apliance. However, be sure to:

- Use any perishables.
- Freeze other items.
- Raise the signal arm in the automatic ice maker to the off (up) position and shut off water supply to the ice maker (All Freezer).

If you will be away from home for a month or more, follow these guidelines:

- Remove all food.
- Turn the power disconnect switch to the off position.
- Clean the unit and door gaskets according to the "Cleaning and Maintenance" section on page 33.
- Prop doors open with rubber or wood blocks so air can circulate inside. This will keep odor and mold from building up.
- Raise the signal arm in the automatic ice maker to the off (up) position and shut off water supply to the ice maker (All Freezer)

Power Interruptions

If electric service to your freezer will be interrupted for 24 hours or less, keep the doors closed. This helps food stay frozen.

If service will be interrupted longer than 24 hours, remove all frozen food and store it in a frozen food locker, or place two pounds of dry ice inside the freezer for every cubic foot of interior volume. This will keep food frozen for two to four days. Be sure to wear gloves to protect your hands from dry ice burns. If neither a food locker or dry ice is available, you should use or can your perishable food at once.

Understanding Sounds You May Hear

Your new appliance may make different sounds than your old one. Hard surfaces, such as the ceilings, walls, and cabinets around the unit can make these sounds seem louder. However, these sounds are normal and will soon become familiar; they indicate that your appliance is working properly.

Here are some of the noises you may hear and what they are:

- Freezer or refrigerator fresh food fan: sounds like air rushing or whirling
- Sealed system (evaporator and heat exchanger) refrigerant flow: sounds like gurgles, pops or boiling water
- Defrost heater: sizzles, hisses or pops
- Condenser fan: air rushes and whirls
- Compressor: has a high pitched hum or pulsating sound
- Ice maker valve hookup: buzzes when ice maker fills with water. This occurs whether or not the unit is connected to water supply. If the unit is not connected to water supply, stop sound by raising ice maker arm to off position (All Freezer).

Troubleshooting

Most performance problems you might encounter with your appliance will be minor and you should be able to fix them yourself without tools.

Listed in these charts are the most common problems consumers run into with their appliances. Please read through this and see if it can solve your problem before calling for service.

Common Refrigerator Problems

PROBLEM	POSSIBLE CAUSE AND/OR REMEDY
Unit will not operate	Is the power cord plugged into a live circuit with the proper voltage? Has a household fuse blown or circuit breaker tripped? Is the power switch in the on position?
Unit makes unfamiliar sounds	See “Understanding sounds you may hear” for descriptions of normal sounds and what makes them.
Ice maker will not operate (All Freezer)	Is the freezer cold enough to make ice? It could take overnight for the freezer to reach the proper temperature. Is the signal arm in the on (down) position? Is the water valve turned on? Is water getting to the water valve? Check water line for leaks.
Lights do not work	Has a household fuse blown or circuit breaker tripped?
Motor seems to run too long	The motor naturally runs longer on hot days, if the room is too warm, if a large amount of food has been added, or if the doors are opened often.
Temperature display does not match set point	Just plugged in unit, just put in hot food, opened the door for an extended time or frequently. Allow unit to stabilize for 24 hours.

Troubleshooting

Common Ice Maker Problems (All Freezer)

PROBLEM	POSSIBLE CAUSE AND/OR REMEDY
Ice crescents attached at corners	This is normal. They break apart easily. Shake bin occasionally to keep cubes seperated.
Ice maker will not operate or ice is not made fast enough	• On/off lever is in the off (up) position. Lower lever to on (down) position. • Freezer is not cold enough. Adjust temperature controls and wait 24 hours.
Off-taste or odor in ice	• New plumbing connections can cause discolored or off-flavored ice. Discard the first three harvests of ice. • Cubes are stored too long. Throw them away and make a new supply. • Food is not wrapped properly • Freezer and ice bin need to be cleaned • Water may contain minerals. A filter may be needed to remove them.

Service Information

If service is required, call your dealer or authorized service agency. The name of the authorized service agency can be obtained from the dealer or distributor in your area.

Have the following information readily available.
- Model number
- Serial number
- Date purchased
- Name of dealer from whom purchased

Clearly describe the problem that you are having. If you are unable to obtain the name of an authorized service agency, or if you continue to have service problems, contact Viking Range, LLC at 1-888-(845-4641), or write to:

VIKING RANGE, LLC
PREFERRED SERVICE
111 Front Street
Greenwood, Mississippi 38930 USA

Record the information indicated below. You will need it if service is ever required. The serial number and model numbers for your refrigerator are located above the drawers:

Model No. _____

Serial No. _____

Date of Purchase _____

Date Installed _____

Dealer's Name _____

Address _____

If service requires installation of parts, use only authorized parts to insure protection under the warranty.

Keep this manual for future reference.

Warranty

BUILT-IN ALL REFRIGERATORS AND ALL FREEZERS WARRANTY
THREE YEAR FULL WARRANTY

Built-in all refrigerator and all freezers and all of their component parts, **except as detailed below*†**, are warranted to be free from defective materials or workmanship in normal residential use for a period of three (3) years from the date of original retail purchase or closing date for new construction, whichever period is longer. Viking Range, LLC, warrantor, agrees to repair or replace, at its option, any part which fails or is found to be defective during the warranty period.

***FULL NINETY (90) DAY COSMETIC WARRANTY:** Product is warranted to be free from cosmetic defects in materials or workmanship (such as scratches on stainless steel, paint/porcelain blemishes, etc.) for a period of ninety (90) days from the date of original retail purchase or closing date for new construction, whichever period is longer. Any defects must be reported to the selling dealer within ninety (90) days from date of original retail purchase. Viking Range, LLC uses high quality processes and materials available to produce all color finishes. However, slight color variation may be noticed because of the inherent differences in painted parts and porcelain parts as well as differences in kitchen lighting, product locations, and other factors. Therefore, this warranty does not apply to color variation attributable to such factors.

†FULL NINETY (90) DAY WARRANTY IN "RESIDENTIAL PLUS" APPLICATIONS: This full warranty applies to applications where use of the product extends beyond normal residential use, but the warranty period for products used in such applications is ninety (90) days. Examples of applications covered by this warranty are bed and breakfasts, fire stations, private clubs, churches, yachts, etc. Under this "Residential Plus" warranty, the product, its components and accessories are warranted to be free from defective material or workmanship for a period of ninety (90) days from the date of original retail purchase. This warranty excludes use of the product in all commercial locations such as restaurants, food service locations and institutional food service locations.

SIX YEAR FULL WARRANTY ON SEALED REFRIGERATION PARTS AS LISTED

Any sealed system component, as listed below, is warranted to be free from defective materials or workmanship in normal household use during the fourth through the sixth year from the date of original retail purchase. Viking Range, LLC, warrantor, agrees to repair or replace, at its option, any part which fails or is found to be defective during the warranty period.

Sealed Refrigeration System Components: Compressor, Evaporator, Condenser, Connecting Tubing, Dryer/Strainer

TWELVE YEAR LIMITED WARRANTY ON SEALED REFRIGERATION PARTS AS LISTED

Any sealed refrigeration system component, as listed above, which fails due to defective materials or workmanship in normal household use during the seventh through the twelfth year from the date of original retail purchase will be repaired or replaced, free of charge for the part itself, with the owner paying all other costs, including labor.

LIMITED LIFETIME WARRANTY

During the life of the product, any stainless steel parts found to be defective in material or workmanship will be repaired or replaced, free of charge for the part itself, with the owner paying all other costs, including labor. This warranty excludes surface corrosion or rust, scratches, discoloration, water or atmospheric conditions, or cleaning practices which are part of normal residential use.

TERMS AND CONDITIONS

This warranty extends to the original purchaser of the product warranted hereunder and to each transferee owner of the product during the term of the warranty and applies to products purchased and located in the United States, Canada, Mexico, and the Caribbean (excludng Cuba, Dominican Republic, and Haiti). Products must be purchased in the country where service is requested. If the product or one of its component parts contains a defect or malfunction during the full warranty period after a reasonable number of attempts by the warrantor to remedy the defect or malfunction, the owner is entitled to either a refund or replacement of the product or its component part or parts. Replacement of a component part includes its free installation, except as specified under the limited warranty. Under the terms of this warranty, service must be performed by a factory authorized Viking Range, LLC service agent or representative. Service will be provided during normal business hours, and labor performed at overtime or premium rates shall not be covered by this warranty.

Owner shall be responsible for proper installation, providing reasonable and necessary maintenance, providing proof of purchase upon request, and making the appliance reasonably accessible for service. The return of the Owner Registration Card is not a condition of warranty coverage. You should, however, return the Owner Registration Card so that Viking Range, LLC can contact you should any question of safety arise which could affect you.

This warranty gives you specific legal rights, and you may also have other rights which may vary from jurisdiction to jurisdiction.

Warranty (cont.)

WHAT IS NOT COVERED BY THIS WARRANTY: This warranty shall not apply to damage resulting from abuse, failure to provide reasonable and necessary maintenance, accident, delivery, negligence, natural disaster, loss of electrical power to the product for any reason, alteration, outdoor use, improper installation, improper operation, or repair or service of the product by anyone other than an authorized Viking Range, LLC service agency or representative. This warranty does not apply to commercial usage.

LIMITATION OF REMEDIES AND DURATION OF IMPLIED WARRANTY

OWNER'S SOLE AND EXCLUSIVE REMEDY FOR A CLAIM OF ANY KIND WITH RESPECT TO THIS PRODUCT SHALL BE THE REMEDIES SET FORTH ABOVE.VIKING IS NOT RESPONSIBLE FOR CONSEQUENTIAL OR INCIDENTAL DAMAGE, INCLUDING BUT NOT LIMITED TO FOOD OR MEDICINE LOSS, DUE TO PRODUCT FAILURE, WHETHER ARISING OUT OF BREACH OF WARRANTY, BREACH OF CONTRACT OR OTHERWISE. Some jurisdictions do not allow the exclusion or limitation of incidental or consequential damages, so the above limitation or exclusions may not apply to you. **ANY IMPLIED WARRANTIES OF MERCHANTABILITY OR FITNESS FOR A PARTICULAR PURPOSE APPLICABLE TO THIS PRODUCT ARE LIMITED IN DURATION TO THE PERIOD OF COVERAGE OF THE APPLICABLE EXPRESS WRITTEN LIMITED WARRANTIES SET FORTH ABOVE.** Some states do not allow limitations on how long an implied warranty lasts, so the above limitation may not apply to you.

WARRANTY SERVICE

To obtain warranty service, contact an authorized Viking Range, LLC service agent, or Viking Range, LLC, 111 Front Street, Greenwood, Mississippi 38930, (888) 845-4641. Provide model and serial number and date of original purchase or closing date for a new construction. For the name of your nearest authorized Viking Range, LLC service agency, call Viking Range, LLC.
IMPORTANT: Retain proof of original purchase to establish warranty period.

Specifications subject to change without notice.