Galanz

Model# GLR10T**K08 GLR10T**E08 GLR12T**K08 GLR12T**E08

REFRIGERATOR INSTRUCTION MANUAL



Thank you for purchasing a Galanz product please read this manual carefully for correct usage and safety, and keep for future reference.For service,support and warranty information,call 800-562-0738.

@2019 Galanz Americas Limited Company.

CONTENT

Names Of The Parts 2
Safety Warnings 3
Installation Instructions 6
Connect Water Supply 7
Reverse And Install The Doors 8
Operation Instructions 10
Instruction For Usage 10
Packing And Moving 11
Maintenance 11
Defrost 11
User Notifications 12
Trouble Shooting Tips 13
Specifications And Parameters 14
Packing List 15
Warranty 16

NAMES OF THE PARTS

GLR10T**K08
GLR10T**E08

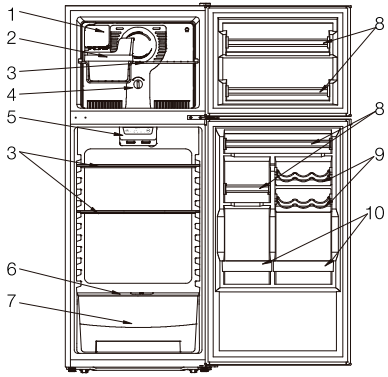

GLR12T**K08
GLR12T**E08

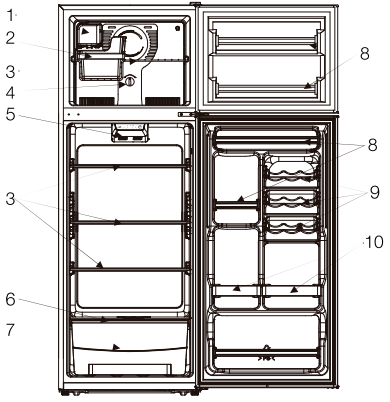

- The refrigerator you purchased may be improved, which maybe not completely consistent with the manual, However the functions and operating methods will not change. Please feel free to use!
- If you use the refrigerator for the first time, remove the adhesive tapes of the drawers, door bins, egg tray, and the drain tube plug.
- Do not pull or push the drawers and door bins fiercely during use in case of damage.
- Adjusted the temperature control as higher as you could accept, which will save the energy consumption of the refrigerator and your money.
  Don't open the refrigerator door continually if it is in the normal working situation.
- Keep the combination of drawers, baskets and shelves of the refrigerator is consistent with its original standard.

1. Ice maker
   (GLR10T**K08, GLR12T**K08)
2. Ice bucket
   (GLR10T**K08, GLR12T**K08)
3. Shelve
4. Freezer control
5. Lamp and refrigerator control
6. Crisper cover
7. Crisper drawer
8. Door rack
9. Can rack
10. Door rack

SAVE THESE INSTRUCTIONS

SAFETY WARNINGS

For ensure your personal safety, please follow the points below:

1. The circuitry for refrigerator must be isolated. The area of cross section of wire must be larger than 0.75mm^2. The power plug should have its own socket, the socket must be ground as adapter may cause the socket to overheat.

2. The voltage and frequency of this product should be 115VAC/60Hz.

3. Do stop the power only by pulling the power plug out of the socket directly but not by the wire.

4. Do not damage the refrigerant circuit.

5. This appliance is not intended for use by persons (including children) with reduced physical, sensory or mental capabilities, or lack of experience and knowledge,unless they have been given supervision or instruction concerning use of the appliance by a person responsible for their safety.

6. Children should be supervised to ensure that they do not play with the appliance.

7. Keep ventilation opening, in the appliance enclosure or in the built in structure,clear of obstruction.

8. Before you throw away your old refrigerator or freezer.

   -- Take off the doors;
   -- Leave the shelves in place so that children may not easily climb inside.

9. Do not store explosive substances such as aerosol cans with a flammable propellant in this appliance.This appliance is intended to be used in household and similar applications such as

   -- staff kitchen areas in shops, offices and other working environments;
   -- farm houses and by clients in hotels, motels and other residential type environments;
   -- bed and breakfast type environments;
   -- catering and similar non-retail applications.

10. Do not use electrical appliance inside the food storage compartments of the appliance, unless they are of the type recommended by the manufacture.

11. This appliance can be used by children aged from 8 years and above and persons with reduced physical, sensory or mental capabilities or lack of experience and knowledge if they have been given supervision or instruction concerning use of the appliance in a safe way and understand the hazards involved.

    Children shall not play with the appliance. Cleaning and user maintenance shall not be made by children without supervision. Children aged from 3 to 8 years are allowed to load and unload refrigerating appliances.

SAVE THESE INSTRUCTIONS

SAFETY WARNINGS

To avoid contamination of food, please respect the following instructions:

-- Clean water tanks if they have not been used for 48 h; flush the water system connected to a water supply if water has not been drawn for 5 days.
-- Store raw meat and fish in suitable containers in the refrigerator, so that it is not in contact with or drip onto other food.
-- Two-star frozen-food compartments are suitable for storing pre-frozen food, storing or making icecream and making ice cubes.
-- One-, two- and three-star compartments are not suitable for the freezing of fresh food.
-- If the refrigerating appliance is left empty for long periods, switch off, defrost, clean, dry, and leave the door open to prevent mould developing within the appliance.

WARNING: When positioning the appliance, ensure the supply cord is not trapped or damaged.

WARNING: Do not locate multiple portable socket-outlets or portable power supplies at the rear of the appliance.

NOTICE:

1. When gas leaks from its container, don't pull the plug, out or in, for it may arouse sparks and fire calamities.

2. Don't splash water on the rear of the appliance, for it may cause malfunction or electric shock.

3. Don't place bottled and canned beverages in the freeze so as to prevent from bursting.

4. Don't stir inflammable materials such as ether, benzene, LP gas and glue etc in the refrigerator .

5. It is better not place object on the top of appliance which is magnetic, heavy, or be filled with water. Electronic components may not work steadily if water gets inside. Do not store object which is costly or impressible to temperature and e.g. serum, bacterin and so on.

6. The refrigerant of this product is R600a,which is inflammable. So,make sure not to damage the cooling system during the transportation and installation.

7. **DISPOSAL:** Do not dispose this product as unsorted municipal waste. Collection of such waste separately for special treatment is necessary.





SAVE THESE INSTRUCTIONS

USE METHOD AND PRECAUTIONS OF DIFFERENT COMPARTMENTS

TIPS FOR USE OF REFRIGERATOR COMPARTMENT

1. The common refrigerating temperature of food stored in refrigerator is from 39~46°F.In this environment, cooked meat can not be stored for more than 4 days, and fruits and vegetables should not exceed one week at most.

2. The common temperature of the chilling room is from 30 ~39°F, and meat can not be stored for more than7 days.

3. Meat and seafood need to be packed in different containers and stored for not more than 3 days.

4. Raw food and cooked food need to stored in different containers. In order to prevent bacterial contamination, raw vegetables and fruits should not be exposed to raw meat or fish. Vegetables and fruits should be wrapped by film and stored in the crisper.

5. Before freezing, the food,separated from raw and ripe,should be wrapped tightly with fresh-keeping film, and placed in different containers. The temperature of freezing room is 0 °F Meat should be kept in fresh and fish in deep-frozen. In order to make the taste fresh and delicious, and to lock up the nutrition of food, the food in the refrigerator should not be stored for more than three months.

SAVE THESE INSTRUCTIONS

INSTALLATION INSTRUCTIONS

1. The refrigerator should be located in a completely flat surface , Leave 2~4 inch(5~10 cm) between each side of the appliance and the wall, and leave 12 inch(30 cm) leave 12 inch(30 cm) top of the appliance and the ceiling.

2. Choose a location which is not exposed to sunlight, high temperature or humid, as humidity may cause stain.

3. Pull out the bottom panel before installation.

4. The appliance can be adjusted by rolling its two legs in front the bottom when it is unstable. Rolling in clockwise can rise up the machine.

5. The location should be firm and flat. An unsecured position may cause noise and vibration:

   (a)The noise may be increased if the floor is not firm.

   (b) Put a sheet under the appliance for solving the heat emission if you need to locate it onto a carpet.

6. Make sure the adjustable legs are clung to the floor, and set the appliance slope backward slightly for keeping the doors closed tightly.

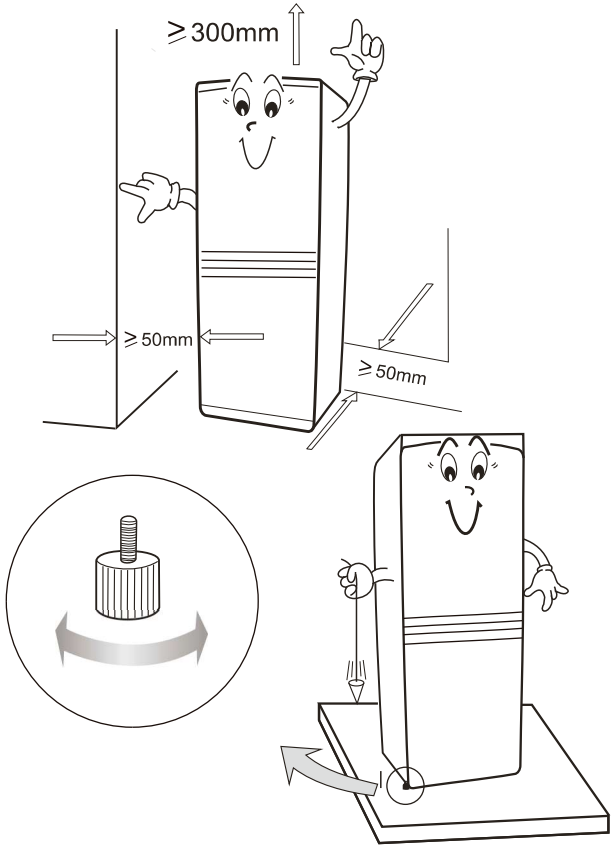

CONNECT WATER SUPPLY(GLR10T**K08 GLR12T**K08)

CONNECT WATER SUPPLY

What you need:

1. Basic tools:adjustable wrench,flat blade screwdriver,and Phillips TM screwdriver.

2. Access to a household cold water line with water pressure between 20 and 120 psi.

3. A water supply line made of 1/4inch(6.4mm)OD, copper tubing. To determine the length of copper tubing needed,you will need to measure the distance from the ice maker inlet valve at the back of
4. the refrigerator to your cold water pipe. Then add approximately 7 feet (2.1 meters), so the refrigerator can be moved out for cleaning.

5. A shutoff valve to connect the water supply line to your household water system. DO NOT use a self-piercing type shutoff valve.

6. A compression nut and ferrule (sleeve) for connecting the water supply line to the ice maker inlet valve.

NOTE: Before making the connection to the refrigerator, be sure that the refrigerator power cord is not plugged into the wall outlet.

1. Place end of water supply line into sink or bucket. Turn On water supply and flush supply line until water is clear. Turn OFF water supply at shut off valve.

2. Remove the plastic flexible cap from the water valve inlet.

1. Place the compression nut and ferrule(sleeve) onto the end of the tubing.

2. Insert the end of the copper tubing into the connection as far as possible. While holding the tubing, tighten the fitting.

3. Turn ON water supply at shutoff valve and tighten any connections that leak.

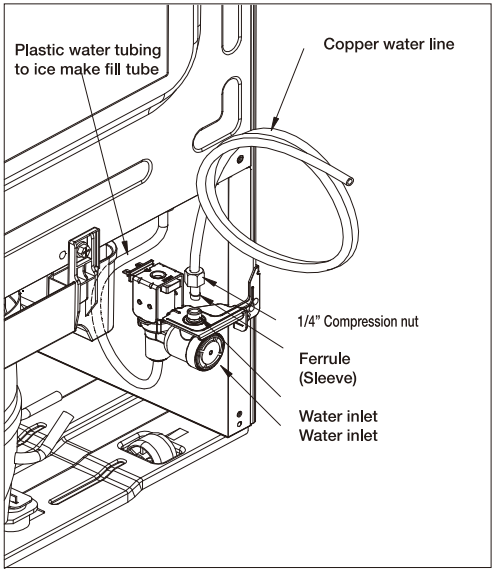

WARNING: Connect to potable water supply only.

REVERSE AND INSTALL THE DOORS

INSTALLATION INSTRUCTIONS

You can choose to open your refrigerator by the right side or the left one. To change the way of opening, please follow the below instructions

Important safety warning: before doing so please unplug and disconnect the appliance

Except the Accessories packed, you still need:

Medium-sized cross screwdriver
Small screwdriver
A solid line

One more person who can help you would be better.

1.Firstly, you need to check if the power connect or not.
2.Open the upper door, and close the bottom door.

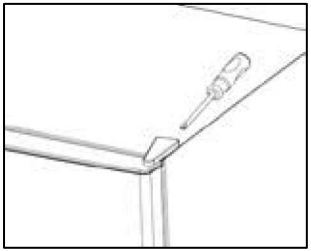

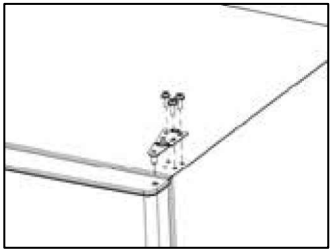

3.Take off the protective covers with a Phillips screwdriver through the back side, and save the protective covers.
4. Take off the 3 shelf-tapping screws, and save them.
5. Push the top hinge forward, remove the door and save it aside.

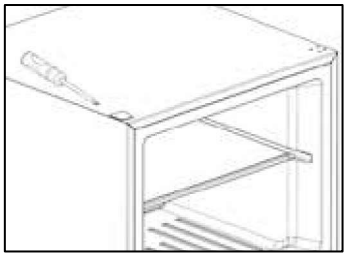

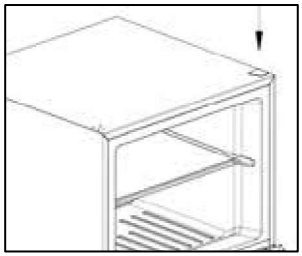

6. Pry off the screw cover on the top left side of the refrigerator to uncover the screws holes.
7. Replace screw cover on the top left side of the refrigerator to the right top to cover the holes. Cover is also force-fitted.

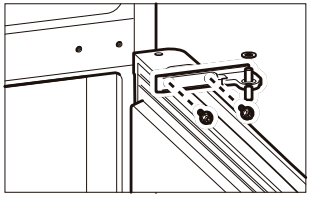

8. Open the bottom door.
9. Take off the 2 screws and save them.
10. Remove the middle hinge.
11. Take out the bottom door and save it

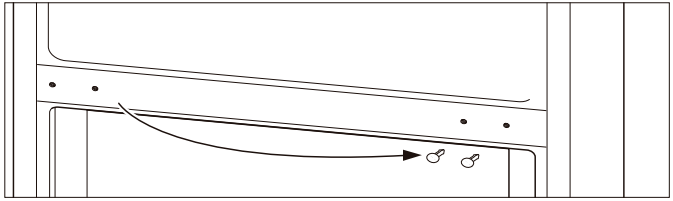

REVERSE AND INSTALL THE DOORS

12. Pry off and remove the cover over the screw holes on the left side of refrigerator housing. Attach cover on the right side. Cover is force-fitted.

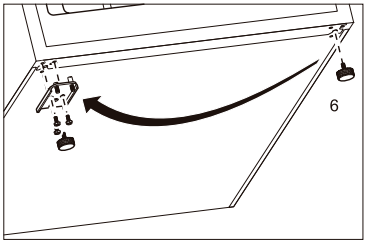

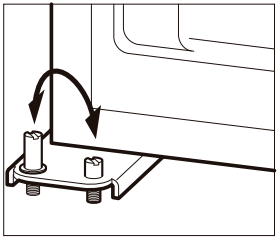

13. slightly backward the machine against the wall.
14. Take off the 2 fixed feet
15. Take off the bottom hinge.
16. Assemble the bottom hinge in the other side of the machine.
17. Fixed up the feet.
18. Exchange the 2 bolts and fixed them in the other sides.

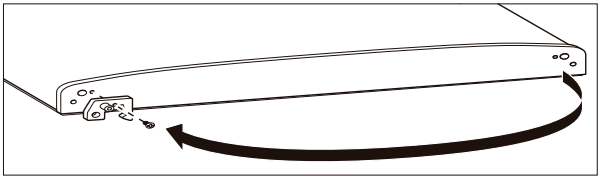

19. Remove the fixed plate of hinge on the bottom door, and fix it on the other side.
20. Fix up the bottom door on the outside bolts.

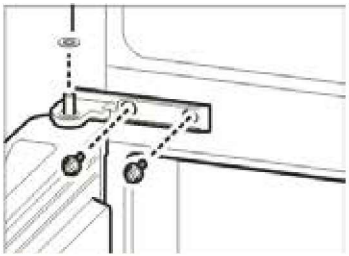

21. Fix up the middle hinge on the bottom door,position it on left side of the refrigerator and reattach with two screws.

22. Take off the right door closer and fix the left closer in the other side of the upper door.

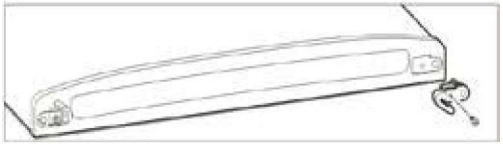

23. Place the top hinge on top of the freezer door and line up the top hinge with holes on top of the refrigerator. Use three screws to replace the hinge.Then tighten the screws. Force-fit protective covers over top hinge.

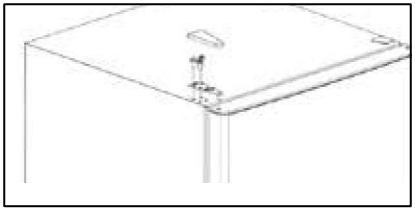

OPERATION INSTRUCTIONS

PLACEMENT OF FOOD

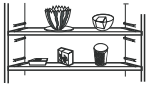



1. There should always be some space between items inside for air circulation.
2. Food should be kept in sealed package to avoid becoming dry or with odour.
3. Hot food should be cooled down before placing into the appliance. Otherwise, interior temperature and electronic consumption will increase.
4. Reduce the frequency of door opening can efficiently low down the electronic consumption.

WARNING Do not use an y electronic equipment inside the appliance.

INSTRUCTION FOR USAGE

REFRIGERATOR CONTROL

The temperature of refrigerator can be controlled manually by the display. However, the number shown on the display does not directly represent the temperature. Instead, the larger the number is the lower the interior temperature will be. Initially set the refrigerator control on the middle setting (number 3). If you want to set the refrigerator temperature to a colder temperature pressing the set button until the state on 4 or 5 each time the set button is pressed, the state increases by 1. When the state is in the highest state, press the button again and return to the first state.



FREEZER CONTROL

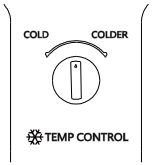

If the refrigerator's lower temperature is needed, please regulate the knob along the "COLDER" direction contrarily, regulate the knob along the "COLD" direction.
Note: Regulate the knob to set the freezer temperature as you desire. Always wait 24 hours after any adjustment to reach the desired temperature

ICE MAKER (on some models)

After turning on your refrigerator, the ice will start to be made between 12and 24 hours.

The ice maker produces 3.5 lbs ice per day, depending on the temperature of the freezer, the times in which the door opens, and other using conditions (amount of food in the freezer, etc).

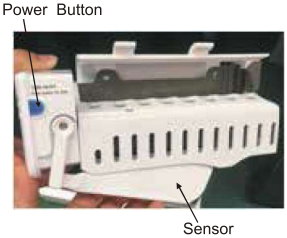

In order to turn on/off the ice maker, press the power button for 2 seconds.

The ice maker will fill up (and start making ice) between 12 and 24 hours after the refrigerator is turned on. Throw away the first batch of ice. Make sure that nothing interferes with the sensor. When the ice reaches the sensor, the ice maker will stop to make ice immediately. It's normal that some ice gets stuck. If the ice is not used frequently, the older cubes of ice will be opaque in color, smaller, and with a strange flavor.

PACKING AND MOVING

1.Unpack, repack and carry
Please memorize the position of each accessory of the appliance when unpack it, repack the product and check it carefully before transportation.

2. Do not lift or pull the door or the door handle during transportation.

3.When moving, the appliance can not be sloped over 45 degrees (the angle to the vertical direction). Please avoid strong vibration and hit.

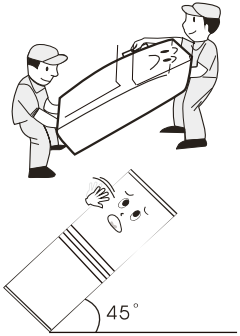

MAINTENANCE

The appliance should be maintained and cleaned frequently. For your safety,do please pull the plug out of the socket before the cleaning.

1.Interior maintenance
Clean the interior of the appliance with clean water or neutral abluent. Scour it with clean water and wipe it with a piece of dry cloth.

2.Maintenance of door gasket
It is easy to damage if the door gaskets are polluted by the stain like oil, sauce and etc., so it is better to clean them carefully.

3. Outer maintenance
Wipe the dusty with a piece of dry cloth ,clean it with neutral abluent if necessary

DEFROST

Defrost of refrigerator will be executed automatically during product running, so it is no requirement for manual defrost. The defrost water flows into the vaporization plate and will be vaporized by the heat of compressor. So its drain tube must be cleaned.

Warning	Do not use mechanical devices or other means to accelerate the defrosting process, other than those recommended by the manufacturer

DISCONNECTING THE APPLIANCE

After power failure, even in summer, the refrigerator can store food normally in several hours.

1. Discontinuation during power failure
After power failure, do not put additional food in the appliance and reduce the frequency of door opening. Make several ices in a container if know the power failure beforehand, and put it in the top of the fridge.

2. Discontinuation during vacation
Please fetch out the easy-rot food and the food in fridge before shot vacation. After confirmation, close the door firmly. If have a long vacation, please fetch out all the food and cut off the power. After defrosting, clean up the liner of the appliance and wipe it dry, and leave the door open.

3. Stop using
If the refrigerator may be stopped using for a long time, please unplug the outlet and clean up the appliance. The door should be kept open in order to prevent unpleasant smell caused by food leavings.

Attention	In a general condition, do not stop the appliance in case of affecting its life. After unplugging the power, please leave at least 5 minutes before resumption.

USER NOTIFICATIONS

1. Do not splash water on the refrigerator, as it will cause oxidation and malfunction. Electronic component such as on/off button should be wiped dryly.

2. Cleansers such as soap powder, abrasive cleaning powder, alkali cleansers, chemical cloth, thinner, alcohol, acid petroleum product and hot water should not be used to clean the refrigerator as they may damage the painted cover and plastics.

3. Smear can damage the interior plastic component, so wipe it as soon as possible.

4. Please check the points below after maintenance:
   (1) Is there any damage or loss of the electronic wire ?
   (2) Can the plug be put in the socket reliably and smoothly?
   (3) Is the plug heating unconventionally?

Attention	Please get rid of the gasket of the door before the disposal. The disposed apparatus should be handled by professional staff, as it may be harmful to the environment.

TROUBLESHOOTING TIPS

1.The refrigerator does not work
It may not be connected to the power supply(plug, power cut or fuse); Voltage is too low.

2.The refrigerator does not work efficiently as expected
It may be caused by heavy frost, or by warm temperature setting,or by frequently door operating.

3.It makes unusual noise
It may be caused by an imbalance or loose ground locating the appliance, or by resonation between the appliance and other ambient objects.

4.The compressor keeps working for a long period
The environment temperature may be too high. The doors may be opened frequently or even they are left open. The temperature control knob setting in (4-5) state may increase the working time of compressor.

5.Disgusting odour happens
Food with strong odour should be packed tightly before being put inside the appliance. Please check whether there is any deteriorated item or whether the liners are left dirty for a long time.

6.Water leaks from the bottom of the refrigerator
The drain tube is jammed. Please use a proper tool to solve it.

7.Heavy frost occurs on the rear of the appliance
Putting humid or hot food into the appliance may cause this problem. Or it may be caused by the heavy environment moisture.

8. The ice maker is not producing ice or not enough ice.

- If it is new installation. Wait 12 to 24 hours after icemaker installation for ice production to begin. It will take 72 hours for full ice production.

- Check if the refrigerator is connected to a water supply or the supply shut off valve is turned on.

-Reverse osmosis filtration systems can reduce the water pressure below the minimum amount and result in icemaker issues.

-A kink in the line can reduce water flow. Straighten the water source line.

-Confirm ice maker is in the ON position.

-The recommended temperature for the freezer compartment for normal ice production is 0°F. If the freezer temperature is warmer, ice production will be affected.

-If the doors are not properly closed, ice production will be affected.

The follow cases are not malfunction

1.Moisture may form dew on the outside of the product during the humid season, just get it wiped.
2.The flow of refrigerant through the pipeline coil can cause a bicker.
3.It is normal that the sides of product get warm as a result of the cooling pipeline working.
4.The frame of the appliance will be warm during working by the defrost pipeline inside it.

Please check the points above first.
If the supply cord is damaged, it must be replaced by the manufacturer, its service agent or similarly qualified persons in order to avoid a hazard.

SPECIFICATIONS AND PARAMETERS

Model		GLR10T**K08 (with icemaker)	GLR12T**K08 (with icemaker)
Climate class		T	
Electric shock protection type		I	
Capacity (cu.ft)	Freezer	2.5	2.6
	Refrigerator	7.5	9.4
Voltage (V)		110 - 120	
Frequency (Hz)		60	
Current (A)		1.2	1.2
Sound rating [dB(A)]		⩽ 42	
Refrigerant		R600a/1.41oz	
Weight (lbs)		123.46	138.89
Interior temperature (°F)	Freezer	⩽ 5	
	Refrigerator	32 ~ 46.4	
Dimension (inch)	Width	23.58	23.58
	Depth	25.71	27.68
	Height	59.72	64.84

SPECIFICATIONSAND PARAMETERS

Model		GLR10T**E08 (without icemaker)	GLR12T**E08 (without icemaker)
Climate class		T	
Electric shock protection type		I	
Capacity (cu.ft)	Freezer	2.5	2.6
	Refrigerator	7.5	9.4
Voltage (V)		110 - 120	
Frequency (Hz)		60	
Current (A)		1.2	1.2
Sound rating [dB(A)]		⩽ 42	
Refrigerant		R600a/1.41oz	
Weight (lbs)		119.05	134.48
Interior temperature (°F)	Freezer	⩽ 5	
	Refrigerator	32 ~ 46.4	
Dimension (inch)	Width	23.58	23.58
	Depth	25.71	27.68
	Height	59.72	64.84

PACKING LIST

Model / Parts / Number	GLR10T**K08 (with icemaker)	GLR12T**K08 (with icemaker)
Shelve	3 pcs	4 pcs
Crisper cover	1pcs	1 pcs
Door rack	6 pcs	7 pcs
Can rack	2 pcs	3 pcs
Crisper drawer	1 pcs	1 pcs
Owner's manual	1 copy	1 copy

PACKING LIST

Model / Parts / Number	GLR10T**E08 (without icemaker)	GLR12T**E08 (without icemaker)
Shelve	3 pcs	4 pcs
Crisper cover	1pcs	1 pcs
Door rack	4 pcs	5 pcs
Can rack	2 pcs	3 pcs
Crisper drawer	2 pcs	2 pcs
Owner's manual	1 copy	1 copy

LIMITED WARRANTY

IN-HOME SERVICE FULL ONE YEAR WARRANTY

For 12 months from the date of original retail purchase, Galanz will repair or replace any part free of charge including labor that fails due to a defect in materials or workmanship. Galanz may replace or repair at their sole discretion any part, or sub system including the entire product. Product must be accessible, without encumbrance and installed properly to receive warranty repair service.

LIMITED WARRANTY

NOTE: This warranty commences on the date the item was purchased, or ownership assumed from a builder and the original purchase receipt must be presented to the authorized service representative before warranty repairs are rendered.

Exceptions:Commercial Use Warranty
90 days labor from date of original purchase
90 days parts from date of original purchase
No other warranty applies.

FOR WARRANTY SERVICE

All service must be performed by a Galanz authorized service . For service, please call 1-800-562-0738. Before calling please have available the following information: (a) Model number and serial number of your appliance. (b) The name and address of the dealer you purchased the unit from and the date of purchase. (c) A clear description of the problem. (d) A proof of purchase (sales receipt).
This warranty covers home appliance services within the contiguous United States and where available in Alaska, Hawaii and Puerto Rico.

What is not covered by this warranty:

Replacement or repair of household fuses, circuit breakers, wiring or plumbing. A product whose original serial number has been removed or altered. Any service charges not specifically identified as normal such as normal service area or hours.
Replacement of light bulbs.
Damage to clothing.
Damage incurred in shipping.
Damage caused by improper installation or maintenance.
Damage from misuse, abuse accident, fire, flood, or acts of nature.
Damage from service other than an authorized Galanz dealer or service center.
Damage from incorrect electrical current, voltage or supply.
Damage resulting from any product modification, alteration or adjustment not authorized by Galanz.
Adjustment of consumer operated controls as identified in the owner's manual.
Hoses, knobs, lint trays and all attachments, accessories and disposable parts.
Labor, service transportation, and shipping charges for the removal and replacement of defective parts beyond the initial 12-month period.
Damage from other than normal household use.
Any transportation and shipping charges.

THIS LIMITED WARRANTY IS GIVEN IN LIEU OF ALL OTHER WARRANTIES, EXPRESS ED OR IMPLIED, INCLUDING BUT NOT LIMITED TO, THE WARRANTIES OF MERCHANTABILITY AND FITNESS FOR A PARTICULAR PURPOSE

The remedy provided in this warranty is exclusive and is granted in lieu of all other remedies.
This warranty does not cover incidental or consequential damages, so the above limitations may not apply to you.
Some states do not allow limitations on how long an implied warranty lasts, so the above limitations may not apply to you.
This warranty gives you specific legal rights, and you may have other rights, which vary from state to state.

WARRANTY REGISTRATION

Please mail this warranty card to the address below within 30 days of purchase.
Galanz Americas, 55 Challenger Road, Suite 503, Ridgefield Park, NJ 07660.

PLEASE PRINT CLEARLY.

Name _____

Address _____

City _____ State _____ ZIP _____

Phone _____ Email _____

Model Number _____ Serial Number _____

Purchase Location _____

You must attach a copy of your purchase receipt to validate your registration.

Galanz

©2019 Galanz Americas Limited Company