A PROUD HERITAGE OF EXPERIENCE & QUALITY

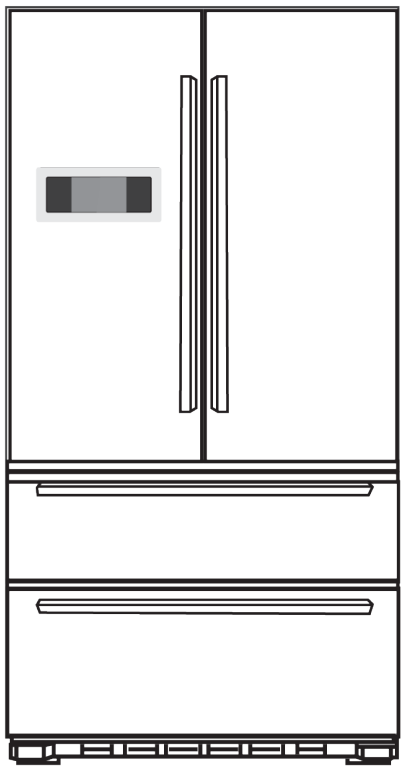

REFRIGERATOR

HC-767WE (BR-FDREF01-SS)

OWNER'S MANUAL

GENERAL OPERATING INSTRUCTIONS

Remove all external and internal packaging from your appliance. Be sure that all parts have been included before discarding any packaging materials. You may want to keep the box and packing materials for use at a later date.

Upon receipt and inspection of unit, the supply cord must be replaced if it is damaged. Contact our customer service at 1-800-777-8466 or info@vinotemp.com.

Let the unit rest UNPLUGGED for 24 hours once you have it placed in your home.

READ ALL INSTRUCTIONS BEFORE USING THIS APPLIANCE
-Save these instructions-

To register your product, visit: http://www.vinotemp.com
Register your warranty within 10 days of receiving the unit.
Please be sure to retain your proof of purchase.

Protect Your Investment with an Extended Warranty!



Add a New Leaf extended warranty to your order, and have the security of knowing that if there should be a problem, even years in the future, New Leaf will be there to assist! Usable for any Wine Cellar or other electronic device manufactured by Vinotemp. Add this warranty to purchases made from vinotemp.com or other qualified venders. Warranty must be registered within the first 10 days from original purchase.

Visit www.vinotemp.com to purchase.

Table of Contents

Important Safety Instructions ---------- 4

Electrical Connection ---------- 5

Specifications ---------- 6

Product Description ----------6-7

Installation ----------8

Start Using Your Refrigerator ---------- 9-13

Door Handles ---------- 14

Minor Adjustment Between Doors ---------- 15

Operation ---------- 16-18

Cleaning and Maintenance ---------- 19

Maintenance and Troubleshooting ----------20

Terms & Conditions ---------- 21-26

Warranty ----------28

Note:

The refrigerator you have just purchased may be slightly different from the one shown in the drawings in this manual, but its overall design is the same.

Please read the information referring to its operation. This refrigerator is intended for domestic use only.

The plug on the refrigerator you have purchased may be different from the one shown in the manual, as the plug that accompanies the product meets your country's electrical specifications.

IMPORTANT SAFETY INSTRUCTIONS



To reduce the risk of fire, electrical shock or injury when using your appliance, follow these basic precautions:

Read these instructions carefully before using your refrigerator, and keep it carefully.
If you follow the instructions, your refrigerator will provide you with many years of good service.

For Children

- Please keep children from entering or climbing the refrigerator to avoid locking the children inside the refrigerator and hurting them when the refrigerator falls.
- Do not let the children near the refrigerator when open and close the doors.
- Children should be supervised to ensure that they do not play with the appliance.

For the User

- This appliance must be grounded. Connect only to grounded outlet. See “ELECTRICAL CONNECTION” on page 5.
- Install or locate this appliance only in accordance with the provided installation instructions.
- Use this appliance only for its intended use as described in the manual. This product is a household refrigerator and is only suitable for storage of food according to state standards. It can't be used for other purposes, like storage of blood, drugs, biological products and etc.
- Never pull out the plug by pulling the power cable. Always hold the plug and pull it out from the socket. Don't have the power cable pressed under the refrigerator or feet. When the refrigerator is moved away from the wall, never press or damage the power cable. When the power cable is damaged or the plug is worn, don't use it anymore. When the power cable is worn or damaged, you must change it at the repair station designated by the manufacturer.
- When coal gas or other inflammable gases are leaked, close the valve for leaking gases. Open the door and windows. Don't pull out or insert the plug of refrigerator or other electric appliances.
- Don't put inflammable, explosive, volatile or strongly corrosive substances into the refrigerator to avoid damaging the refrigerator or starting fire or other accidents.
- Don't use inflammable solvent near the refrigerator to avoid fire.
- It is advisable that you don't put the power socket, voltage stabilizer, microwave oven and other electric appliances on top of refrigerator to ensure safety. Don't use any electric appliances inside the refrigerator (except for the model recommended) to avoid interference or other accidents.
- When the refrigerator starts to work, don't touch the cold surface of the freezer compartment, especially with wet hands, to avoid hurting.
- The gap between doors and between the door and refrigerator body is small. Don't put your hands into these areas to avoid finger squeeze. When you open the refrigerator's door, don't let children approach.
- Don't sprinkle water onto the refrigerator. Rinse the surface of the refrigerator with water.
- Don’t put the refrigerator in wet or easy-to-sprinkle places so as not to influence the electric insulation property of the refrigerator.
- Don't disassemble or reform the refrigerator by yourself. Never damage the refrigeration pipeline. Please get the refrigerator repaired by professionals.
- Don't put fluid substances in bottles or sealed containers into the freezer, like bottled beer or drinks to avoid that the explosive cracking during freezing causes other losses.
- When power outage or cleaning, pull out the plug. Turn on the power supply after at least five minutes to avoid that repeated startup might damage the compressor.

- As with any appliance, close supervision is necessary when used by children.
- Keep cord away from heated surface.
- Do not operate this appliance if it has a damaged cord or plug, if it is not working properly, or if it has been damaged or dropped.
- When the refrigerator is out of service, please take down the refrigerator's door, remove the door seal and shelves and put them at proper places to avoid that children might play inside and cause accident.
- This appliance should be serviced only by qualified service personnel. Contact nearest authorized service facility for examination, repair, or adjustment.

ELECTRICAL CONNECTION

	Improper use of the grounded plug can result in the risk of electric shocks. If the power cord is damaged, frayed or shows cracks or abrasions across its length, have it replaced at an authorized service center.

This appliance must be grounded. In the event of an electrical short circuit, grounding reduces the risk of electric shock by providing an escape wire for the electric current. This appliance is equipped with a cord having a grounding wire with a grounding plug. The plug must be plugged into an outlet that is properly installed and grounded.

For your protection, this unit is equipped with a 3-conductor cord set that has a molded 3-prong grounding-type plug, and should be used in combination with a properly connected grounding-type outlet.

- Do not under any circumstances cut or remove the third ground prong from the power cord supplied. For personal safety, this appliance must be properly grounded.
- Do not kink or pinch the power supply cord of appliance.
- The cord should be secured behind the unit and not left exposed or dangling to prevent accidental injury.
- A standard electrical supply (115V AC only, 60Hz, 15A), properly grounded in accordance with the National Electrical Code and local codes and ordinances, is required.
- Never unplug the unit by pulling the power cord. To disconnect the appliance, always grip the plug firmly and pull straight out from the wall outlet. When moving the unit, be careful not to damage the power cord.
- The unit should always be plugged into its own individual electrical outlet with a voltage rating that matches the rating label on the unit.

Extension Cord

CAUTION: It is strongly recommended that you do not use an adapter or an extension cord with this unit.

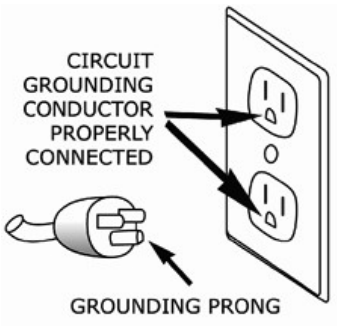

SPECIFICATIONS

Model	HC-767WE (BR-FDREF01-SS)
Voltage	AC 115V
Frequency	60Hz
Ambient Temp Range	53.6-109.4°F (12-43°C)
Control Temp Range	41-64.4°F (5-18°C)
Refrigerant	R134a, 6.35Oz
Power Consumption	623 kW•h/y
Rated Defrost Power (W)	370W
Volume	585L
Net Weight	293.2lbs (133kg)
Gross Weight	317.5lbs (144kg)
Dimensions (W x D x H)	35.87 x 28.68 x 69.88 in
Box Dimensions (W x D x H)	38.78 x 30.71 x 72.4 in

PRODUCT DESCRIPTION

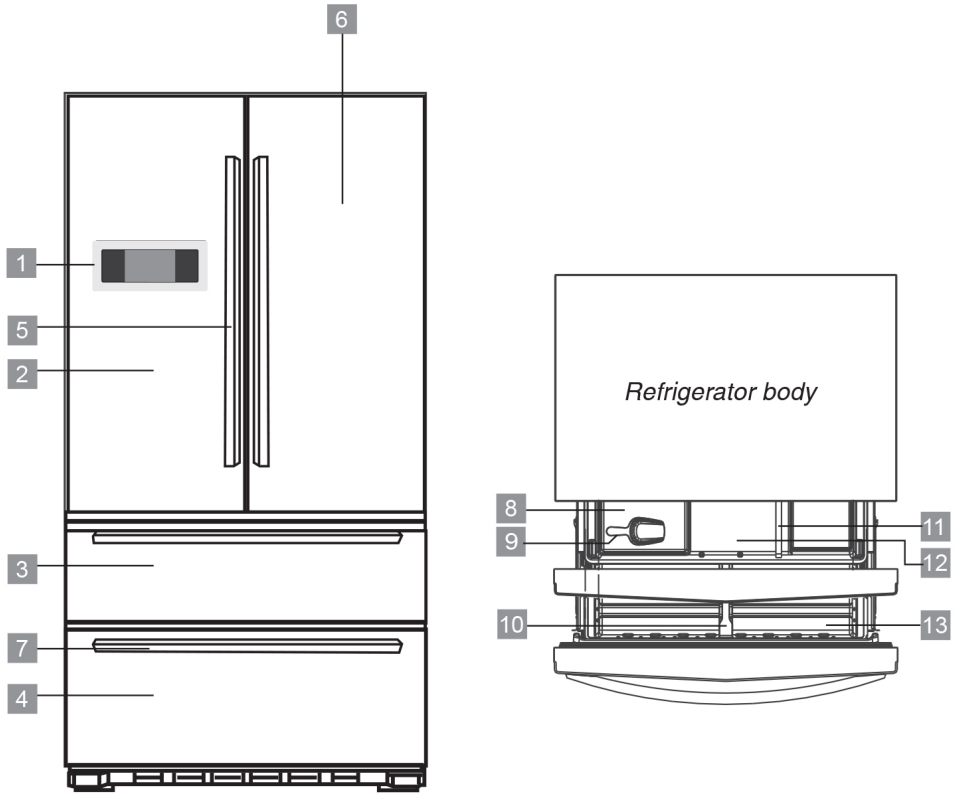

1) Display
2) Left door for refrigerator compartment
3) Upper door for freezer compartment
4) Lower door for freezer compartment
5) Door handle
6) Right door for refrigerator compartment
7) Drawer handle
8) Ice storage box
9) Ice scoop
10) Partition plate for lower freezer drawer
11) Partition plate for upper freezer drawer
12) Upper freezer drawer
13) Lower freezer drawer

PRODUCT DESCRIPTION (PART II)

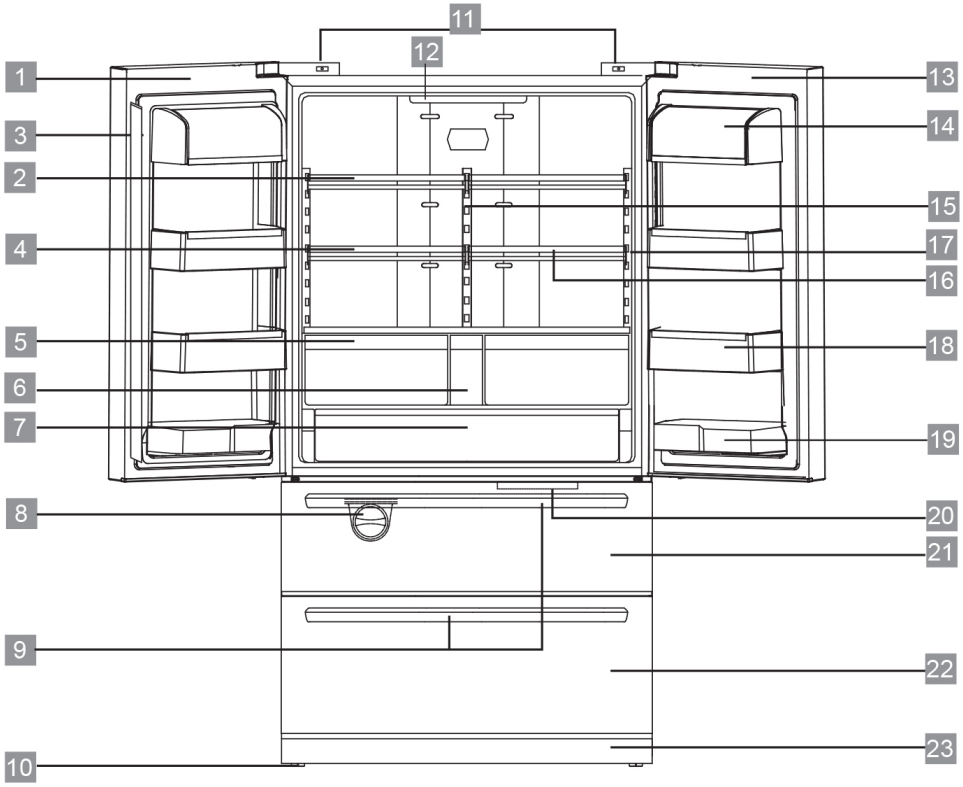

1) Left door for refrigerator compartment
2) Cantilever rack
3) Turnover beam
4) Sliding cantilever rack
5) Fruit and vegetable drawer
6) Small drawer
7) Big drawer
8) Automatic ice maker
9) Drawer handle
10) Leveling leg
11) Switch for refrigerator compartment lamp
12) Top lamp for refrigerator compartment
13) Right door for refrigerator compartment
14) Butter box
15) Air duct cover plate
16) Folded cantilever rack
17) Side lamp for refrigerator compartment
18) Gallon bottle rack (With egg bracket)
19) Special-shaped bottle rack
20) Top lamp for freezer compartment
21) Upper door for freezer compartment
22) Lower door for freezer compartment
23) Decorative cover for bottom beam

INSTALLATION

Remove all packaging material before using the new refrigerator. This includes the foam base and all adhesive tape holding the refrigerator accessories inside and outside.

Clean both the inside and outside of the refrigerator with wet cloth (a little detergent could be added into the warm water to wash the cloth and then wipe it again with the clean water).

Prepare an independent two-pole socket with grounding contact for the refrigerator and it shall not share a multi-purpose socket with other electrical appliances.

Do connect grounding wire! The grounding pole of the socket shall be provided with a reliable grounding wire.

Open the refrigerator body and take out the accessory (decorative cover for bottom beam) and the three screws from the instruction packaging bag. Next, install them into the bottom beam as shown by the schematic diagram on the right.

The decorative cover for bottom beam is used as ornament, so you can choose not to install it. It won't affect the refrigerator's performance or conditions no matter whether you install it or not.

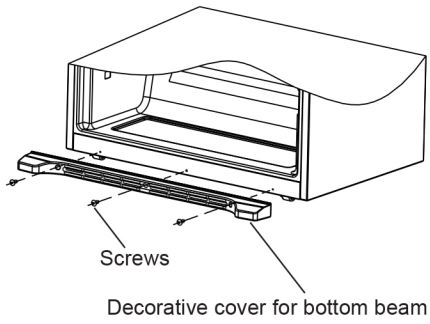

Transport and placing of your refrigerator

Transport

Keep upright and avoid squeezing or vibration during transport. Avoid a slant angle over 45 degree during handling.

Avoid the door or top cap from being under excessive stress when moving; otherwise, it may become deformed.

Placing

Place your refrigerator in a well-ventilated place and keep it from heat source and direct sunlight. Don't place it in any humid or wet place so as to avoid rust and weakening of insulation effect.

There shall be a space not less than 30cm from the top of your refrigerator and not less than 10cm from both sides or the back of the refrigerator to the adjacent walls respectively. This requirement is good for open and close of the door and also for heat emission.

The refrigerator shall be placed on a flat and firm ground (if not flat, you can use the leveling legs for adjustment).

Note:

The refrigerator must be disconnected from the source of electrical supply before attempting the installation of accessory.

Don't use mechanical equipment or other methods to accelerate the defrosting process except the means recommended by the manufacturer.

Don't use any electrical appliances in the food storage compartments except the model recommended by the manufacture.

The R134a refrigerant and cyclopentane foaming material used in the refrigerator are inflammable. All waste and discarded refrigerators shall be placed away from naked fire and they are not allowed to burn.

Warm Reminder: place foods into the drawer. Do not place any foods after removing the drawer.

Keep your refrigerator standing

Don't connect your refrigerator to the power supply immediately after it is placed vertically. You should keep it standing for at least 6 hours before switching it on in order to ensure it running well.

Make sure the power wire is not pinned by the refrigerator or other objects so as to avoid accidents arising from power wire faults. Please check the voltage scope of your refrigerator against the actual power supply before switching it on.

Start Using Your Refrigerator

You ought to get a good knowledge of all safety precautions and make sure that your refrigerator has been placed properly in its final position before using.

1. Unpacking

Please install the decorative cover for bottom beam onto your refrigerator after unpacking and adjust the front leveling legs to level your refrigerator.

2. Connecting Your Refrigerator to the Power Supply

Your refrigerator will enter the ex-factory default state after connecting to the power supply and it will display target temperature for the refrigerator compartment and freezer compartment.

3. Work Modes of Your Refrigerator

You can set your refrigerator in either of the following two ways:

Auto mode: we suggest you choosing this mode if you have no special requirements. Your refrigerator will work automatically after you chose this mode.

Manual mode: You can set the temperature by pressing the temperature adjustment key.

4. Put Food into Your Refrigerator

You can put your food into the refrigerator after a period of time (About hours in summer) when the refrigerator has already fully refrigerated its interior compartments.

Tips: The interior temperature may require a certain period of time to reach balance if the setting temperature is changed or other food is put into the refrigerator. Such a period of time depends on the change to the setting temperature, the surrounding temperature, opening frequency, the amount of the stored food and etc.

Refrigerator compartment

Though the temperature-adjustable device could keep most of the refrigerator compartment at an average temperature around 1℃~7℃, it fails to preserve the freshness of food for long. As a result, the refrigerator compartment can be used only for short-term storage.

Use of turnover beam

Please keep strictly to the warnings on the label of the turnover beam. It is a normal phenomenon that the surface of the turnover beam is hot. Dews on the surface are also normal in summer or when the surrounding environment is wet. What you need to do is to clean them away with cloth.

Adjustment of cantilever rack

The cantilever rack could be adjusted to the proper height as required by food. Please adjust the cantilever rack by following the arrows as shown in the diagram. Raise it upward first and then take it out by tilting it upward. During installation, put the upper end of the fixed leg into one of the upper slots on the supporting iron first and then put the lower end of the fixed leg into the third slot on the lower part of the supporting iron.

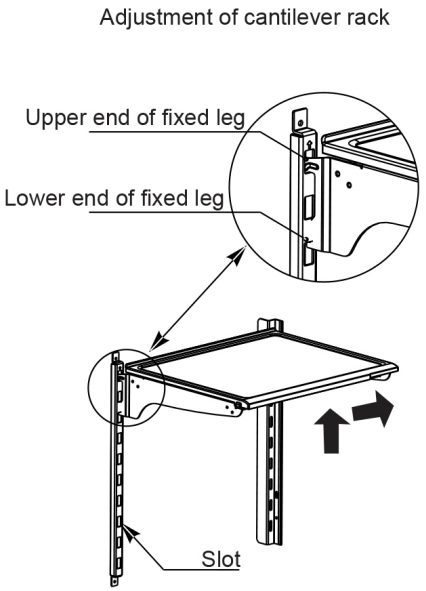

Height adjustment and cleaning of door-mounted bottle rack

Raise the bottle rack in the direction, hold it with both hands and take it out in the direction. After cleaning, you can install the rack in the reverse order and you can also adjust the height of the rack.

Adjustment of door-mounted bottle rack

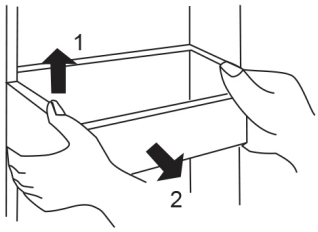

Food suggested to store in refrigerator compartment

1. Cooked wheaten food, cans, milk, etc.
2. Snack food, food subject to tainting, dairy product
3. Cooked cold meat, sausage
4. Fruit, vegetables
5. Eggs, butter, cheese
6. Cans, seasoning
7. Drinks, other bottled food

Freezer compartment

The temperature in the freezer compartment is very low so it could preserve the freshness of food for long. Those that shall be stored for long could be put in this compartment but not exceed the storage period specified on the packaging of each kind of food.

You can take out the drawers of the freezer compartment to increase its capacity and store more food.

Food suggested to store in freezer compartment

1. The upper drawer of the freezer could be used to store fish, meat, ice-cream and etc.
2. Ice storage box is used to store the ice.
3. The lower drawer of the freezer is used to store fish, meat and packaged poultry meat.

Taking-out and installation of the lower freezer drawer

1. Pull out the lower freezer drawer to the proper position.
2. Press the buttons in both slots respectively (must press both sides at the same time), pull out the freezer drawer until it stops.
3. Take out the lower drawer as directed by the arrows.

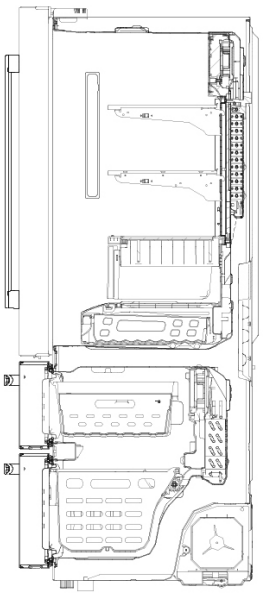

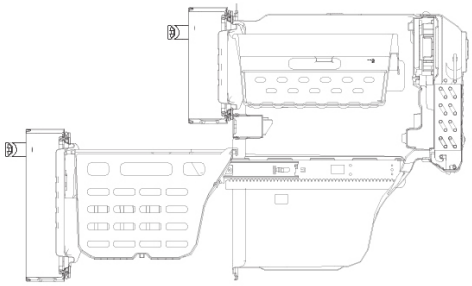

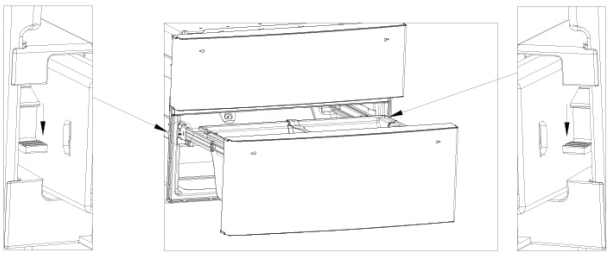

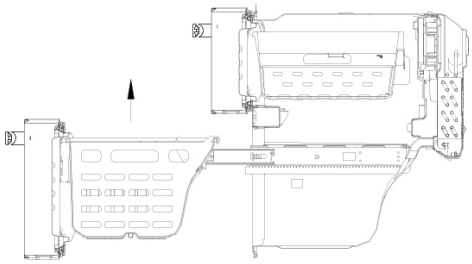

Don't remove the lower freezer drawer unnecessarily

Big drawer

The big drawer has a maximum load of 10kg.

Pull out and install the big drawer

1. Pull out the big drawer.
2. Find the hook at the left and right sides at the drawer bottom (shown in the figure).
3. Hold the hook at two sides with a nose pliers or tweezers and push it up and out of the groove of sliding rail, and take out the hook at the other side with the same method.
4. Take out the drawer.
5. Install the drawer by putting the hook into the right place.

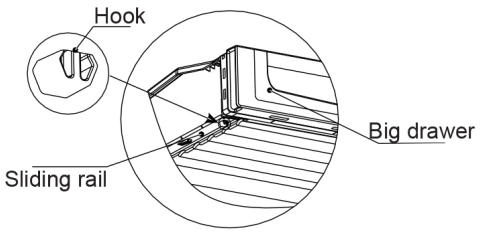

Ice-maker

Operating instructions on the ice-maker

1. When the refrigerator is used for the first time, start the ice-maker after 20min. The ice-maker is capable of producing 1.3~1.5Kg ice in 24hr, depending on the temperature of freezer compartment, surrounding temperature, times of door opening/closing and other working conditions.
2. If the ice-maker isn't used for a long period, please close the ice-maker at the control panel of the Refrigerator door, clear the ice cube box and ice storage box.
3. When the ice marker starts again after a long period of power off, please ensure that ice cubes are not melted. Otherwise, please clear the ice cube box and ice storage box.
4. Check the level of water tank from time to time (if the level of water tank is too low, ice cubes will be smaller).
5. The ice-maker checks the ice amount automatically and stop ice-making when the ice storage box is full.
6. You will hear the sound of motor after about two hours, which is the sound of pump providing water to the ice maker and doesn't indicate malfunctioning.
7. It is normal that several ice cubes may stick together or get crushed.
8. When the refrigerator is used for the first time, the ice maker starts to work after the freezer compartment is cooling for about three hours (maybe longer when there is much food stored). The ice-maker could produce about

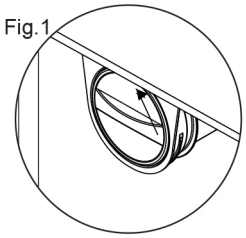

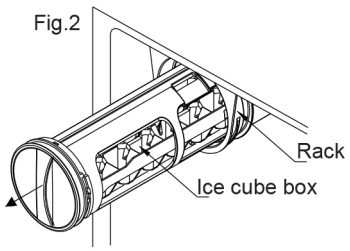

1.3kg ice cubes within 24 hours, which may vary depending on the temperature of freezer compartment, surrounding temperature, times of door opening/closing and other working conditions.
9. The ice-maker is capable of automatic water supply, ice-making and ice-removal. Please don't take out the ice cube box and add water by yourself.

Note: If you did not use the fridge for a long time, you need to get the water out of the ice-maker when using again and clean the ice-maker to make sure the ice is pure.

Take out, clean and install the ice cube box

If the ice maker isn't used for a long period, ice cubes that are just produced might have unpleasant smell. You must take out and clean the ice cube box.

Fig.3

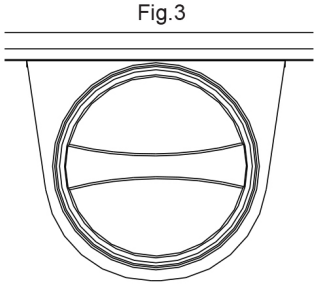

Locked status

Open the upper drawer in the freezer compartment, rotate the knob of ice maker counterclockwise by 90, turn the handle from the horizontal position to vertical position to release the lock (as shown in Fig. 1 of Pg. 14), pull it out (as shown in Fig. 2 of Pg. 14) and take out the ice cube box.

Rinse the ice cube box with warm water (below 60℃) and don't use detergent.

Dry the ice cube box completely in air in case that water droplets in the ice cube box might cause abnormal functioning of the ice maker.

Fig.3

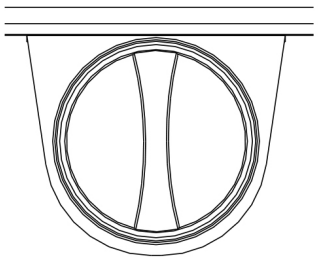

Unlocked status

When the ice maker can't move, separate the ice maker as shown in Fig. 1 and Fig.2. Then install after ice cubes are melted.

Insert the ice cube box onto the rack according to original sequence and rotate to the locked position.

Take out and install the ice maker

When the ice maker isn't used, it could be taken out and the vacated space could be used as a part of the freezer compartment.

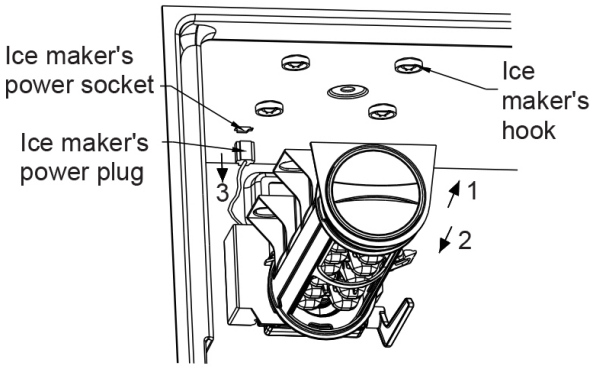

Push the Ice Maker button on the control panel at the refrigerator door and the icemaking sign disappears.

Open the door and take out the drawer.

Pull the ice-maker out (as shown in Fig.1), and then downwards, so that the ice maker is unhooked (as shown in Fig. 2).

Pull down the ice maker's power plug so that it is detached from the ice-maker's power socket (as shown in Fig. 3)

Install the ice maker into the original position, push the Ice Maker button, the ice-making symbol appears.

Close the door after the ice maker is installed to the proper place, otherwise, it might damage the ice maker.

Door Handles

Assembly instructions of cold storage door handle:

1. Firstly, take the handle set bolts out from the refrigerator, use cross recessed screwdriver to set the bolt on the door. Fix it tight with all the screw thread twisted through the hole, as shown in the figure.
2. After the first step is completed, take the cold storage door handle out from the box, place it as per the direction shown in the figure (Note: i.e. the direction which both screw holes on the handle are close to the edge), and hang the handle above the set bolt.
3. Use the small hexagon spanner supplied in the box to set the handle fixing socket head cap screws into both the small screwed holes on the handle. After they are screwed down, gently shake the handle, so as to confirm that the handle is well erected.

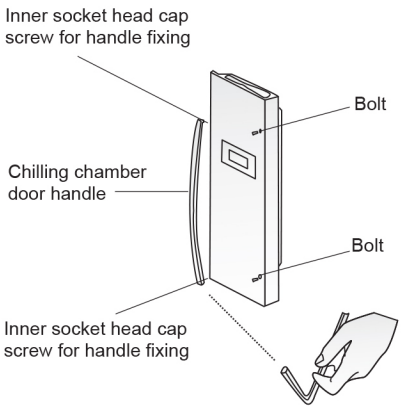

Scheme of installation of cold storage door handle

Assembly instructions of the refrigerator door handle:

The assembly steps of the refrigeration door handle are the same with that of the cold storage door handle. Please note that: during the assembly of the handle, the direction of tapping hole is downward (to the ground).

Difference between the chilling and refrigeration handle: lie them flat, the one with higher chordal height is the refrigeration handle



Refrigeration door handle



Cold storage door handle

Making minor adjustments between doors

Remember a level refrigerator is necessary for getting the doors perfectly even. If you need help, review the previous section on leveling the refrigerator.

Make adjustment only when the left door is lower than the right door, or the right door is lower than the left door.



Do as follows:

1. Raise the left door or the right door.
2. Insert the supplied fastener-ring (2) using a pair of pliers (3) in the gap between the hinge-grommet (1) and the lower hinge (4). The number of fasten-rings you will need to insert depends on the gap.

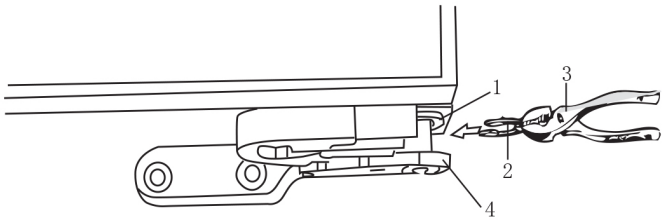

Installing the water line (optional)

Installing the water line

1. The water pressure must be between. 0.17MPa (1.72 bar, 24.95 PSI) and 0.82 MPa (8.25 bar, 119.66 PSI).
2. Please take off the cover of water adapter, and then use spanner to fix the water adapter to the water tap tightly.
3. Turn on the water tap slowly, as to check whether there is water leakage from the connection of water adapter.
4. It is recommended to scrap first round 5 kilograms ice before consumed.

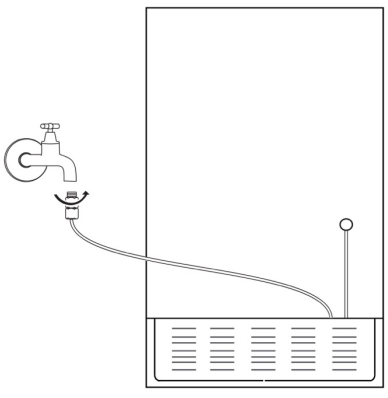

OPERATION

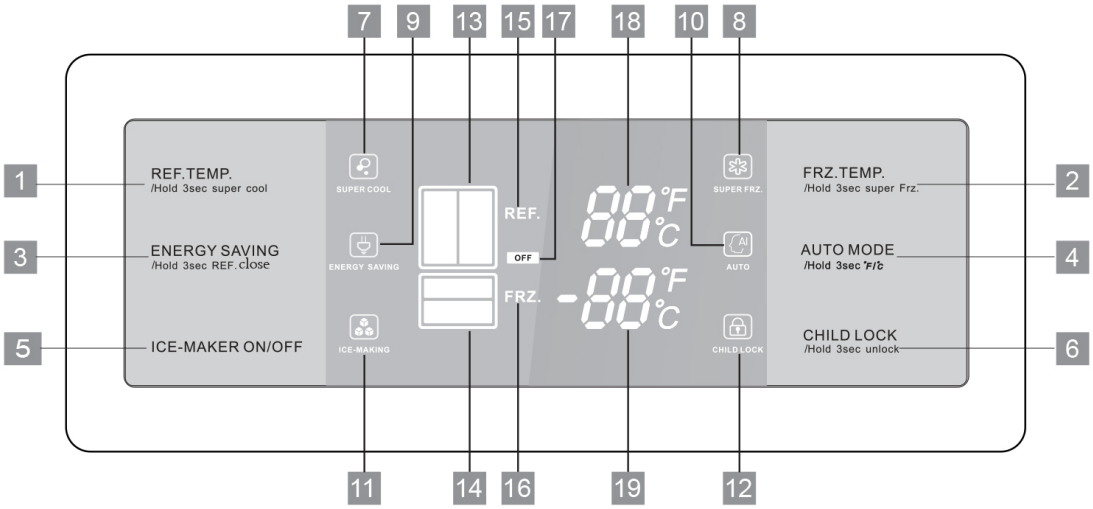

Control buttons

1) Refrigerator temperature control
2) Freezer temperature control
3) Energy saving mode
4) Auto mode
5) Ice-making switch
6) Child lock

Display items

7) Fast-cooling icon
8) Fast-freezing icon
9) Energy saving icon
10) Auto icon
11) Ice-making icon
12) Lock icon
13) Refrigerator compartment icon
14) Freezer compartment icon
15) Refrigerator indicator
16) Freezer indicator
17) Off icon
18) Refrigerator temperature
19) Freezer temperature

Initial power-on status:
All on

Locking and unlocking

Under unlocked status (indicator 12 is off), long press "CHILD LOCK" for 3 seconds to lock control panel and indicator 12 is on. Under locked status, long press "CHILD LOCK" for 3 seconds to unlock the control panel. If no other keys are pushed within 30sec under the unlocked status, it will enter into the locked status automatically.

Ice-making switch

To activate the ice maker, press the “ICE-MAKER” and the “ICE-MAKING” icon will illuminate. The ice maker will begin to make ice. To turn off the ice maker, press “ICE-MAKER”. The ice maker will stop making ice. When the freezer temperature below -5℃, the ice maker needs 135 minutes to 240 minutes to complete ice according to different ambient temperature.

Energy saving mode

In order to save energy, this mode sets the temperature in the refrigerator at 7℃ and the temperature in the freezer at -15℃. “AUTO” mode default settings are 5℃ and -18 ℃, respectively.

To activate the “Energy Saving” mode, press the ENERGY SAVING MODE button and the “ENERGY SAVING” icon will illuminate. Enabling the energy saving mode for the refrigerator will automatically disable all other modes.

To de-activate “Energy Saving” mode, do any of the following:

1. Select another mode.
2. Press REF. TEMP. or FRZ. TEMP. to exit setup.
3. Press ENERGY SAVING MODE button to exit the energy-saving mode when any of the above situations occur.
4. Press AUTO MODE to exit the energy-saving mode when any of the above situations occur.

Auto mode

This function will set the temperature of the refrigerator compartment to 5℃ and the freezer compartment to -18℃. If the refrigerator compartment is turned off, the auto mode will still be in effect for the freezer compartment.

To activate Auto Mode, press AUTO MODE and the “AUTO” icon will illuminate, indicating the activation of “AUTO MODE”. Selecting “AUTO MODE” will automatically de-activate all other modes.

To toggle between Celsius and Fahrenheit display, press and hold “AUTO MODE” button for three seconds.

To de-activate Auto Mode:

1. Select another mode.
2. Press REF. TEMP. or FRZ. TEMP. to exit setup.

Fast-cooling mode

This mode is used to counteract a sudden rise in the temperature of the refrigerator compartment, especially when a large quantity of items is placed into the refrigerator after a trip to the supermarket. The compressor will work for longer cycles to maintain the desired temperature.

To activate the “Fast-Cooling” mode, press REF Temp for three seconds and the “Super Cool” icon will illuminate. When the fast-cooling mode is activated for the refrigerator compartment, all other modes are automatically de-activated.

The “Fast-Cooling” mode can be de-activated by doing any of the following:

1. Activate the “Energy-Saving” or “AUTO” mode.
2. Press REF. TEMP. to adjust the temperature.
3. Hold down REF. TEMP. for three seconds. When the temperature of the refrigerator compartment reaches the set temperature, “Fast-Cooling” mode will be automatically de-activated.

Fast-freezing mode

This function is used to counteract a sudden rise in the freezer compartment in order to preserve the nutritional content of the food. It is recommended that this mode be activated at least two hours before a large quantity of items is placed into the freezer.

To activate the “Fast-Freezing” mode, press FRZ. TEMP. for three seconds and the Super Frz. icon will illuminate. When the “Fast-Freezing” mode is activated for the freezer compartment, the “Energy-saving” mode or AUTO MODE will automatically be de-activated.

The “Fast-Freezing” mode can be de-activated by doing any of the following:

1. Activate the “Energy-Saving” or “AUTO” mode.
2. Press FRZ. TEMP. to adjust the temperature.
3. Press and hold FRZ. TEMP. for three seconds. When the temperature of the freezer compartment reaches the set temperature, “Fast-freezing” mode will be automatically de-activated.

Turning off the refrigerator compartment

The refrigerator compartment can be independently turned off. When the refrigerator compartment is turned off, the freezer compartment will remain working. This function is recommended when the refrigerator compartment will remain empty for a long period of time.

To independently turn off the refrigerator compartment, press and hold the ENERGY SAVING MODE button for three seconds. The “Refrigerator Compartment” icon will go out and the “OFF” icon will illuminate. The REFRIGERATOR TEMPERATURE digital display will read shows “—”. To turn the refrigerator compartment back on, press and hold the “Energy Saving” button for three seconds. The “Refrigerator Compartment” icon will illuminate, the “OFF” icon will go out, and the REFRIGERATOR TEMPERATURE digital display will return to normal.

To set the temperature of the refrigerator compartment

Press the REF. TEMP. button and the REFRIGERATOR TEMPERATURE digital display will illuminate. To change the temperature setting, press the REF.TEMP. button again until the desired temperature is displayed. The temperature of the refrigerator compartment can be adjusted between 7 and 1 degrees in Celsius with a step of 1°C or between 34 and 44 degrees in Fahrenheit with a step of 1°F.

To set the temperature of the freezer compartment

Press the FRZ. TEMP. button and the Freezer Temperature digital display will illuminate. To change the temperature setting, press the FRZ. TEMP. button again until the desired temperature is displayed. The temperature of the freezer compartment can be adjusted between -13 and -22 degrees in Celsius with a step of 1°C or between 9 and -8 degrees in Fahrenheit with a step of 1°F.

CLEANING AND MAINTENANCE

Refrigerator’s Maintenance and Repair

Cleaning

Clean regularly dust from the back of refrigerator and ground.

Clean regularly the space inside the refrigerator to avoid any unpleasant smell.

Before cleaning, pull out the plug and use soft towels and neutral detergent and clean it finally with clear water. It is recommended to clean once half a year.

Never use following substances to clean the space inside the refrigerator:

Alkaline or weakly alkaline detergent (it might cause cracking of the liner and plastic parts).

Soap powder, benzoline, thinner, alcohol and etc. (might damage plastic parts).

Wipe off edible oil or flavoring immediately (might cause cracking of plastic parts).

Shutdown

When the refrigerator isn't used for a long period:

Pull out the power cable to avoid any potential risks that the old power cable may cause, such as electric shock or fire.

Clean the space inside the refrigerator

Open the door for a period for drying, close the door with a gap left to avoid unpleasant odor.

Power outage

Reduce the times of door opening during power outage, don't put fresh food inside the refrigerator anymore.

Disposal

When you discard an unused refrigerator, remove the door seal to avoid locking children inside the refrigerator.

Danger

Risk of child entrapment. Before you throw away your old refrigerator or freezer:

1. Take off the doors.
2. Leave the shelves in place so that children may not easily climb inside.

MAINTENANCE & TROUBLESHOOTING

Check your problem by using the chart below and try the solutions for each problem. If the refrigerator still does not work properly, contact the nearest authorized service center. Please read the following contents before repair request.

Occurrence	Possible Cause / Inspection Items
Not working	Whether the power is switched on. Whether the plug is secured. Whether the voltage is too low.
Can’t freeze properly	Whether the temperature is set too high (might reduce the temperature as required). Whether too much food is stored. Whether hot foot is stored. Whether the door is opened and closed too frequently. Whether there is hot source around the refrigerator. Whether the door seal is closed.
Loud noises	Whether the ground is leveled and the refrigerator is placed on leveled ground. Whether accessories of the refrigerator are put at the right position.
Food is frozen inside the refrigerator compartment.	Whether the food is put near the air outlet.
The refrigerator has unpleasant smell.	Food with special odor shall be tightly wrapped. Check whether the food has gone bad. Clean inside the refrigerator.

- If the situation doesn't turn better after you have checked all above items, please contact with the after-sales Service Centers. If power cables are damaged, please get it changed by the repairmen designated by our Service Centers to avoid any risk.
- Normal phenomena not regarded as malfunctioning.
- Refrigerant inside the capillary tubes of the refrigerator flow in high speed and might have a few amount of bubbles. Hence, irregular noises might appear at the outlet.
- When the air humidity is excessively high, moisture or water droplets might appear around the refrigerator's door. You just need to wipe it off.
- No extension cord used.

TERMS & CONDITIONS

Shipping/Delivery fees are the responsibility of the Purchaser. Seller is not responsible for the carrier's missed/Non delivery for any reason. Delivery is curbside. Optional upgrades in delivery service is an additional fee. If upgraded delivery service cannot be performed properly, Purchaser agrees to accept delivery curbside and the difference in upgraded cost will not be refunded. If item with free shipping/freight is canceled in transit, a charge of 25% of the price of the unit/s plus freight costs both ways will be charged. All damages must be noted at time of delivery on BOL and Seller to be notified within 48 hours of delivery of such damage. Purchaser acknowledges if cancelation is authorized by Seller, a 35% restocking fee and freight both ways will be charged. No cancelation or refund on made-to- order products. If an order has been placed and production has not started, cancellation fee of 15% of total amount will be charged. Cancelled orders paid by Credit Card will have an additional fee of 3% deducted from the total refund. Refurbished units are sold as is. Purchaser assumes risks to the quality and performance of goods and assumes the costs of all necessary service or repair not covered herein.

(Box here for check mark) Accept Terms & Conditions

Vinotemp International Corp. ("Seller") and the person or entity that acquires these goods from Seller ("Purchaser") hereby fully agrees to the following terms and conditions of the sale: **Shipping**/**Delivery** fees are the responsibility of the Purchaser whether freight prepaid or freight collect. Seller assumes responsibility for the goods sold to the Purchaser until the goods have reached Purchaser's delivery address (FOB Destination) and the delivery receipt is signed clear. Seller is not responsible for the carrier's late delivery, missed delivery, unpaved roads, remote locations, stairs, elevators, narrow door openings and other such issues in attempting to fit or deliver the goods into the Purchaser's location. Delivery to remote locations may require additional fees. Remote location may be defined at the discretion of the carrier as more or less than 50 miles from the nearest major city. Purchaser assumes all responsibility for additional costs related to freight such as access, measurement, installation, hookup, wiring, moving and storage of the goods, flight of stairs, carrier's inability to safely and/or adequately deliver, inability to use the building elevator to lift the goods, narrow openings, along with any additional costs to deliver or redeliver the product properly. Make sure to review access to the property and size of the product ordered. The transportation of all goods is subject to the terms and conditions which the carrier imposes on Purchaser. Installation is the responsibility of the Purchaser. If white glove delivery was ordered and cannot be performed properly, or access is hindered in any way, Purchaser agrees to accept delivery curbside (delivery service cannot be refunded). If Purchaser will-calls or pays for their own freight responsibility transfers to the Purchaser when the Purchaser or Purchasers freight company picks up the unit from Seller. Freight quoted are either curbside, threshold or white glove. Standard white glove delivery is main floor, easy access and NO STAIRS, Doors, aligned feet attached (if necessary) and removal of packaging, additional fees for additional requests. Each service has a different rate and will require additional fees. If freight is not charged (Free Shipping or Freight Included) and the order is cancelled after shipping, a freight charge of 25% of the cost of the unit, each direction will be charged. Item swap outs are arranged as curbside delivery and pickup unless noted otherwise. There is no white glove service for returns. Approved returns must have original and/or proper packaging. Swap-outs (Delivery and Pick up are at the same time) Original unit must be packed and ready for carrier pick up at time of delivery of new unit. Packaging of old unit must be adequate for shipping, not oversized or on a pallet if unit was not originally delivered on a pallet. Carrier will not drop off new unit if the original unit is not ready. If the carrier has to make a second attempt, customer will be subject to additional charges for the attempted delivery and for any packaging issues. Deliveries include ONE attempt by the shipping company to deliver the product to the consumer. If for any reason the customer is unavailable to accept the order and the product is undeliverable under any circumstances, the customer will be responsible for any extra shipping and handling charges.

We are a manufacturer not a shipping company, deliveries are done by a 3rd party service. Email us at info@vinotemp.com for a quote or any additional information. Freight discussed is Continental USA (excluding Alaska, Puerto Rico, Hawaii), cost is additional please email info@vinotemp.com for a quote.

California **Proposition 65** Warning: The products sold on this ecommerce website and to the public may contain chemicals and other substances known to the State of California to cause cancer and birth defects and other reproductive harm.

Totes made of vinyl, imitation leather, and/or leather material contain lead and/or other substances that are known to the State of California to cause cancer, birth defects and other reproductive harm.
Microfiber “Plastic microfiber” means a small synthetic particle that is fibrous in shape, less than 5 millimeters in length, and is released into water through the regular washing of textiles made from synthetic material.
Composite wood: May contain formaldehyde.
Galvanized metal and some of its constituents contain lead and/or other substances that are known to the State of California to cause cancer, birth defects and other reproductive harm.
Products made of vinyl contain lead, Diethyl Hexyl Phthalate (DEHP), and/or other substances that are known to the State of California to cause cancer, birth defects and other reproductive harm.
Acrylic may contain Acrylic Acid and/or other substances that are known to the State of California to cause cancer, birth defects, and other reproductive harm.
Appliances may contain tin or lead in either the paint or the controllers, and/or other substances that are known to the State of California to cause cancer, birth defects, and other reproductive harm.
Our barware items may contain plastic, acrylic, enamel, crystal, metal and/or other substances that are known to the State of California to cause cancer, birth defects, and other reproductive harm.
Appliances may contain Tin, Lead or Nickel

Damage: All damages must be noted at time of delivery. If a bill is signed that there is no damage, buyer accepts delivery as free and clear. Any claim for damages of the goods, when FOB Destination, that incurred during shipment by the carrier are insured and handled directly with the carrier by the Seller if noted on the receipt and notified within 48 hours of delivery. OPEN AND INSPECT YOUR DELIVERY. When FOB Destination, if the item is damaged by the freight company, and Purchaser cancels rather than accepts a replacement, the order can be cancelled by paying for freight costs both ways and a 35% restocking fee for stocked items. No cancellation or refunds on custom/made or made to order products. When shipped 3rd Party (FOB Warehouse), Purchaser assumes all responsibility for delivery, payment of freight and freight claims for damages during shipment. Manufacture defects will be handled directly with Seller, subject to the limited warranty below.

Fees: All sales are final. Unless authorized in writing by the Seller, Purchaser may not return the goods under any circumstance. If Seller agrees in writing to take back stocked goods, there will be a restocking/service fee that is 35% of the purchase price of the goods and freight both ways (product must be new, unused, and in original packaging). If Purchaser returns goods claiming that the goods are defective and goods are found to be in working condition by the Seller, Purchaser is liable for the cost of freight both ways plus and a service fee that is 35% of the purchase price of the goods. Built to Order and Custom products are nonreturnable, nonrefundable. Purchaser must notify Seller of nonconforming goods within 48 hours of receipt, after which time all goods are deemed accepted by the Purchaser. If an order has been placed and production has not started, cancellation of your order will be a 15% charge. If Purchaser tenders payment with a check that has insufficient funds (NSF), a collection fee plus NSF fee of $50 will be added to the invoice, which Purchaser agrees to pay promptly. If Purchaser puts a

stop payment on a check or credit card for any reason, Purchaser agrees to pay for all costs associated with the Seller's collection or litigation of such a claim, including, without limitation, general and special damages, court costs and attorneys' fees. Finance charges begin the date of invoice. Title to the goods reverts back to the Seller in the case of nonpayment of goods or services. All fees and costs to retrieve the product, cost of freight, legal costs, collection fees and court fees, credit card fees and interest rate of 18% (annual rate) will be the responsibility of the Purchaser. In a credit card dispute, Purchaser assumes and must immediately pay any "credit card arbitration" fees and chargeback fees which the credit card companies charge at the time of the chargeback. Cancelled orders using a Credit Card will have an additional fee of 3% deducted from the refund. Any disputes not resolved within 30 days from the invoice date will be reported to credit reporting agencies.

LIMITED WARRANTY: Seller warrants that the goods will be free of defects in materials and workmanship as follows:

Furniture style (wood) wine cabinets made in the U.S.: all cooling unit parts only for a period of 1 (year) year; cabinetry and labor (uninstalled) for a period of 12 (twelve) Months (Model numbers "Vino" and "Custom".
Metal cabinet units (appliances) (compressor) (made in China and Denmark)(Model numbers start with EL, VT, IL, or EP: parts and labor for cooling system and cabinetry for a period of 12 (twelve) months.
Thermoelectric Units: 90 (ninety) days (including Wine and Beverage Coolers, Beer Dispensers, Humidor, Portofino Wood Cellars, and Refrigerators). (Models start with EL, VT, IL or EP). WineMate and Cellar Tec (WM, Wine Mate or CT)(Wine Cooling Units) Split and Ducted Systems and other installed cooling units are parts only for 1 year, no labor. Self Contained WineMate Cooling Systems are 1 year parts, 1 year labor. Removal and reinstallation of cooling units is not included.
Wine Accessories, Racking Systems, Parts and Other miscellaneous items is a 30 day warranty.
Il Romanzo units: Warranty 90 (ninety) days. Replacement part 12 (twelve) months from the date of sale.
Brama: 1 year warranty from date of purchase.
Non-New Units (Scratch & Dent/Refurbished/Floor Models), warranty for compressor units is 90 days from your dated invoice and 30 days for thermoelectric units (parts for function only, not cosmetic defects). These units are refurbished and sold as is; Purchaser assumes risks to the quality and performance of goods and assumes the costs of all necessary service or repair not covered herein. Extended warranties via New Leaf may not be purchased on Non-New Units. Delivery is curbside. Upgrades in delivery will require an additional fee.
Element Grills (via Element Products LLC), grills have a thirty day limited parts warranty on grill accessories.
If a model is not listed here will have 90 day warranty on parts only if it's a new item.

Parts and Repairs: Warranty on in-house repairs: 90 days parts and labor for compressor; 30 days parts and labor for Thermoelectric; Customer is required to put down a labor deposit of $75 for Thermoelectric units; $150 for compressor based Wine Coolers and $195 for WineMate units which will be kept if a unit is found to be in good working condition. Customer is responsible for freight costs to us.

Warranty on parts purchased: 30 days; if part fails within 30 days of purchase, customer is to ship us back the part; upon inspection, if defective, VT will send replacement part at no charge.

If a purchaser claims a product is "defective" with regards to refrigeration, Purchaser must obtain a letter from a qualified refrigeration technician at the Purchaser's cost to verify that the unit was installed properly, with proper ventilation and the unit is truly malfunctioning due to a manufacturing defect.

Removal or reinstallation of a unit is not included in warranted costs. Purchaser's exclusive remedy is limited at Seller's option to repair or replace defective part[s] with either new or reconditioned part[s]. Purchaser is responsible for shipping the unit prepaid to a designated facility and Seller will pay return shipping charges in the continental United States for items repaired under warranty within 12 (twelve) months from date of sale. The returned unit must be packaged correctly, with enough protection to ensure the unit is not further damaged. Oversized or lack of packaging is not permitted and will be refused. Replacement or exchanged units will be returned to Purchaser through curbside delivery only. Any redelivery fees are the Purchasers responsibility. Since the natural variation in texture, density, grain, color, tone, and shade of wood is unavoidable; Seller does not guarantee the texture, color, tone, or shade of the wood: nor does seller guarantee the colorfastness of wood or against peeling, chipping, cracking, or scratching. Note: Unfinished wood is subject to warping; all wood surfaces must be sealed before placing cellar into service. Make sure doors are aligned by reviewing the owner's manual. Improper repair or placement of the unit will void the warranty. Any third party repair facility must be preapproved in writing by Seller, before providing replacement parts under warranty. Change Orders: Custom units already in production that require a change will be subject to a change order fee.

Storage Fees: When having an item serviced by a Vinotemp service technician at the Vinotemp facility, Purchaser agrees to pick up their repaired item or make arrangements for return shipping within a 30 day period once they have been notified by Vinotemp through phone call, email, or letter that their unit is ready for pick up. If the item remains in the Vinotemp warehouse after 30 days but no longer than 60 days, the Purchaser will incur additional storage fees of 2%. After 60 days in storage, the item will become property of Vinotemp. For custom units with deposits: If product is not picked up or shipped within 60 days of completion, Purchaser deposit is forfeited and product becomes the property of Vinotemp. Warranty period is from the date of sale (not from shipping, delivery, nor installation). All completed cabinetry, racking, or other custom work must be picked up or shipped within a period of 14 days after Vinotemp has notified the Purchaser by phone call, email, or letter. Any completed cabinetry, racking, or other custom work stored longer than 14 days will incur an additional monthly storage fee. After 60 days, the product will become property of Vinotemp.

This Limited Warranty does not cover damage due to such things as accident, misuse, abuse, mishandling, neglect, acts of God, fires, earthquakes, floods, high winds, government, war, riot or labor trouble, strikes, lockouts, delay of carrier, unauthorized repair, or any other cause beyond the control of the Seller, whether similar or dissimilar to the foregoing. Seller is not responsible for any damages caused to Purchaser's property resulting from the goods. This limited warranty applies only inside the Continental US (Alaska, Puerto Rico, Hawaii and other territories/countries are not warranted). Purchaser understands and acknowledges that the goods sold here are wine cellars, cigar humidors, and/or other similar units which house wine or cigars or other items. Purchaser assumes all risk of using these units, including risk of spoilage, humidity variations, temperature variations, leaks, fire, water damage, mold, mildew, dryness and similar and any other perils that might occur. Seller is not responsible for incidental or consequential damages, and there are no warranties, expressed or implied, which extend beyond the Limited Warranty described above. Warranty and liability are nontransferable. The implied warranties of merchantability and of fitness for a particular purpose are hereby expressly disclaimed. Some states do not allow the exclusion of incidental or consequential damages, or a waiver of the implied warranties of fitness and/or merchantability, so the above limitations may not apply to you. This warranty gives you specific legal rights and you may also have other rights which vary from state to state. Seller disclaims any indemnification for claims of infringement of any intellectual property of protectable nature. In the event of any dispute between Seller and Purchaser arising out of or relating to these terms and conditions or to the goods sold generally, Purchaser must first file a written claim with Seller within ten days of the occurrence giving rise to the claim and wait an additional thirty days for a response before initiating any legal action. The sale and all terms are subject to Nevada law. Any legal proceeding arising out of or relating to these terms and conditions or to the goods sold Purchaser shall bring, solely and exclusively

in Clark County. In no event may Purchaser initiate any legal proceeding more than six months after the occurrence of the event giving rise to the dispute. Seller may make nonpayment claims until debt is paid in full. Any dispute or claim relating in any way to these to the Terms and Conditions, the Website, or any products or services sold or distributed by or through this Website, store, or catalog will be resolved by binding arbitration, rather than in court, except that you may assert claims in small claims court if your claims qualify. The Federal Arbitration Act and federal arbitration law apply to the Terms and Conditions. We each agree that any dispute resolution proceedings will be conducted only on an individual basis and not in a class, consolidated or representative action. If for any reason a claim proceeds in court rather than in arbitration we each waive any right to a jury trial. Both parties agree to bring suit in court to enjoin infringement or other misuse of intellectual property rights.

The above terms and conditions are the only ones governing this transaction and Seller makes no oral representations of any kind. These Terms and Conditions can only be modified in writing, signed by both Purchaser and Seller.

SPECIFIC WARRANTY BELOW for SCRATCH & DENT/OPEN BOX/ REFURBISHED/FLOOR MODELS/ CLOSEOUTS, OVERSTOCK: TERMS AND CONDITIONS OF SALE

Vinotemp (and its brands Element, Wine Mate, Cellar Tec, Apex Wine Racks, Epicureanist Il Romanzo, Brama("Seller") and the person of the entity that acquires these goods from Seller ("Purchaser") hereby fully aggress to the following terms and conditions of the sale:

1. Freight: Vinotemp is not a freight, moving or installation company, if Freight is arranged for the Buyer, the Seller assumes no responsibility for the goods sold to the Purchaser once the goods have left the Seller's premises, including, but not limited to, late delivery by the moving carrier, or for events caused by any difficulty carrier incurs in attempting to fit the goods into the Purchaser's place of business or residence due to the size of the goods or otherwise, such as the disassembly and reassembly of the goods. Purchaser assumes all responsibility for delivery, payment of freight, extra fees, access, measurement, installation, hook-up, moving and storage of the goods. The transportation of all goods is subject to the terms and conditions which the moving carrier imposes on Purchaser including, but not limited to, additional charges imposed per flight of stairs, and/or additional charges resulting from the carrier's inability to safely and/or adequately use the building elevator to lift the goods to an upper floor. Any claim for damages incurred during shipment by the carrier of the goods are insured and handled directly with the carrier and must be noted at time of delivery.

2. All sales are final, and unless authorized in writing by the Seller, Purchaser is not entitled to return goods, under any circumstances. If Purchaser refuses to accept goods, the Purchaser is liable for the return and cost of freight both directions and a restocking/service fee that is 35% of the purchase price of the goods. Purchaser must notify Seller of non-conforming goods within four days of delivery, after which time all goods are deemed accepted.

3. If Purchaser tenders payment with a check that has insufficient funds (NSF), or stops payment on a check or credit card for any reason, Purchaser agrees to pay for all costs associated with the Seller's connection or litigation of such a claim, including without limitation extra damages, court costs, collection fees and attorney's fees. Finance charges begin the date of invoice. Collection fees plus NSF fee of $50 will be added to your invoice, which you agree to promptly pay. Title to the goods does not pass until payment is received in full by Seller and Seller retains a security interest in the goods until they are paid for in full. If the credit card dispute goes to arbitration, Buyer agrees to pay for credit card arbitration fees.

4. LIMITED WARRANTY on Non-New Units (Scratch & Dent/Refurbished and Floor Models): warranty for compressor units is 90 days from your dated invoice and 30 days for thermoelectric units (parts for function only, not cosmetic defects). These units are refurbished and sold as is;

Purchaser assumes risks to the quality and performance of goods and assumes the costs of all necessary service or repair not covered herein. Wine Accessories, Racking Systems and other items not mentioned are not warranted. There is no warranty on parts purchased separately. Removal and re-installation of unit is not included in warranted labor. Purchaser's exclusive remedy is limited, at Seller's option; to repair or replace defective part[s] with either new or factory reconditioned part[s]. Purchaser is responsible for shipping the unit pre-paid to designated facility and Seller will pay return shipping charges in the continental United States for items repaired under warranty. Since the natural variation in texture, density, grain, color, tone and shade of wood is unavoidable; Seller does not guarantee the texture, color, tone or shade of the wood: nor does seller guarantee the colorfastness of wood or against peeling, chipping, cracking or scratching. Note: Unfinished wood is subject to warping; all wood surfaces must be sealed before placing cellar into service. Improper placement of the unit will void the warranty. By Vinotemp in writing, any 3rd party repair facility must be pre-approved before providing parts free of charge.

5. Freight: If As-Is unit is shipped including freight and delivery is denied, customer is responsible for freight to and from buyer. Other costs Buyer is responsible for is storage, repackaging, and attempted delivery fees.

6. Vinotemp does not cover damage due to such things as accident, misuse, abuse, mishandling, neglect, acts of God, fires, earthquakes, floods, high winds, government, war, riot or labor trouble, strikes, lockouts, delay of carrier, unauthorized repair, or any other cause beyond the control of the Seller, whether similar or dissimilar to the foregoing. Seller is not responsible for any damages caused to Purchaser's property resulting from the good. This limited warranty applies only inside the Continental US. (Alaska, Puerto Rico and Hawaii are not warranted.)

7. Purchaser understands and acknowledges that the goods sold here are wine coolers, appliances, cigar humidors, and/or other similar units which may house wine or cigars or other consumables. Purchaser assumes all risk of using these units, including risk of spoilage, humidity variations, temperature variations, leaks, fire, water damage, mold, mildew, dryness and similar perils that might occur.

8. UNLESS OTHERWISE PROVIDED BY APPLICABLE LAW, SELLER IS NOT RESPONSIBLE FOR INCIDENTAL OR CONSEQUENTIAL DAMAGES, AND THERE ARE NO WARRANTIES, EXPRESS OR IMPLIED, WHICH EXTEND BEYOND THE DESCRIPTION ON THE FACE HEREOF; WARRANTY AND LIABILITY ARE NON-TRANSFERABLE. THE IMPLIED WARRANTIES OF MERCHANTABILITY AND OF FITNESS FOR A PARTICULAR PURPOSE ARE HEREBY EXPRESSLY DISCLAIMED. SELLER DISCLAIMS ANY INDEMNIFICATION FOR CLAIMS OF INFRINGEMENT OF ANY INTELLECTUAL PROPERTY OF PROTECTABLE NATURE.

9. In the event of any dispute between Seller and Purchaser arising out of or relating to these terms and conditions or to the goods sold generally, Purchaser must first file a written claim with Seller within thirty days of the occurrence giving arise to the claim and wait an additional thirty days for a response before initiating any legal action. Any legal proceeding arising out of or relating to these terms and conditions or to the goods sold generally shall be brought solely in Clark County. The prevailing party in any such proceeding is entitled to its attorney's fees and costs. In no event may Purchaser initiate any legal proceeding more than six months after the occurrence of the event giving rise to the dispute.

10. **Delivery is curbside. Upgrades in delivery will require an additional fee.**

The above terms and conditions are the only ones governing this transaction and Seller makes no oral representations of any kind. These Terms and Conditions can only be modified in writing, signed by both Purchaser and Seller. 02/05/2019



Correct Disposal of this product:

This marking indicates that this appliance should not be disposed with other household wastes. To prevent possible harm to the environment or human health from uncontrolled waste disposal, recycle it responsibly to promote the sustainable reuse of material resources.

SERVICE & IMPORTANT NOTICE

Upon receipt and inspection of unit, the supply cord must be replaced if it is damaged. Contact our customer service at 1-800-777-8466 or info@vinotemp.com.

The manufacturer has a policy of continuous improvement on its products and reserves the right to change materials and specifications without notice.

WARNING:
Please do not place the unit within reach of children.
For adult use only

Contact **info@vinotemp.com** with any questions or visit

www.vinotemp.com

New Leaf SERVICEPRO SERVICE PLANS
Essential consumer protection.

Add a New Leaf extended warranty to your order, and have the security of knowing that if there should be a problem, even years in the future, New Leaf will be there to assist! Usable for any Wine Cellar or other electronic device manufactured by Vinotemp. Add this warranty to purchases made from vinotemp.com or other qualified venders. Warranty must be registered within the first 10 days from original purchase.

Visit www.Vinotemp.com to purchase.

732 S. Racetrack Road
Henderson, NV 89015
www.vinotemp.com

Vinotemp is a registered trademark of Vinotemp International. All products, features, and services are subject to change without notice. We cannot guarantee the accuracy of the contents of this document. We disclaim liability for errors, omissions, or future changes.

© 2020 Vinotemp International. All rights reserved.