TRICITY BENDIX

OPERATING & INSTALLATION INSTRUCTIONS



REFRIGERATOR

TB 25 TR

1347106

A/T/5-4. (02.)

Download from Www.Somanuals.com. All Manuals Search And Download.

This instruction book contains safety precautions, hints, information on use and helpful hints and tips.

To ensure you use this appliance effective and safely, please read this instruction book carefully before installing or using this appliance and retain for future reference.

The symbols below help you to find things more easily:



Safety precautions
Warnings and Safety information



Hints, useful information



Environmental information

Download from Www.Somanuals.com. All Manuals Search And Download.

IMPORTANT SAFETY INSTRUCTIONS

These warnings are provided in the interests of your safety. Ensure that you understand them all before installing or using this appliance. Your safety is of paramount importance. If you are unsure about any of the meanings or these warnings contact the Customer Care Department.

Prior to installation

- Check the appliance for transport damage. Under no circumstances should a damaged appliance be installed. In the event of damage please contact your retailer.

Installation

- This appliance is heavy. Care should be taken when moving it.
- It is dangerous to alter the specifications or attempt to modify this product in any way.
- Ensure that the appliance does not stand on the electrical supply cable. If the supply cable is damaged, it must be replaced by a cable available from your local Service Force Centre.
- Any electrical work required to install this appliance should be carried out by a qualified electrician or competent person.
- Parts which heat up should not be exposed. Whenever possible, the back of the appliance should be close to a wall, but leaving the required distance for ventilation, as stated in the installation instructions.
- The appliance should be left for 2 hours after installation before it is turned on, in order to allow the refrigerant to settle.

Child Safety

- Do not allow children to tamper with the controls or play with the product.
- There is a risk of suffocation! Keep packaging material away from children!

During Use

- This appliance is designed for domestic use only, specifically for the storage of edible foodstuffs. It is not intended for commercial or industrial use.
- Containers with flammable gases or liquids can leak at low temperatures. Do not store any containers with flammable materials, such as spray cans, fire extinguisher refill cartridges etc. in the refrigerator.
- Do not place carbonated or fizzy drinks in the ice-making compartment.
- Ice lollies can cause 'frost/freezer burns' if consumed straight from the ice-making compartment.
- Do not remove items from the ice-making compartment if your hands are damp/wet, as this could cause skin abrasions or frost/freezer burns.

Maintenance and Cleaning

- Before cleaning, always switch off the appliance and disconnect from the electrical supply.
- When unplugging always pull the plug from the mains socket, do not pull on the cable.

Servicing

- This product should be serviced by an authorised engineer and only genuine spare parts should be used.
- Under no circumstances should you attempt to repair the appliance yourself. Repairs carried out by inexperienced persons may cause injury or serious malfunctioning. Contact your local Service Force Centre.

At the end of the Appliance Life

- When disposing of your appliance use an authorised disposal site.
- Remove the plug and ensure that any locks or catches are removed, to prevent young children being trapped inside.

The Appliance and the Environment

This appliance does not contain gasses which could damage the ozone layer.

Avoid damaging the cooling unit.

The packaging used on this appliance marked with the symbol is recyclable.

Keep this instruction book for future reference and ensure it is passed on to any new owner.

Download from Www.Somanuals.com. All Manuals Search And Download.

CONTENTS

Instructions for the User

Guide to use the instruction book **2**

Important Safety Instructions **3**

Instructions for the User **5**
General Information 5
Description of the Appliance, main parts 5

Using the Appliance **6**
Before Use 6
To Start the Appliance 6
Thermostat Control 6
Hints for storage 6
Storage Shelf 7
The Ice-making Compartment 7

Hints and Tips **7**
Food Storage 7
Energy Saving Advice 7

Maintenance and Cleaning **7**
Internal cleaning 7
External cleaning 8
When the appliance is not in Use 8
Defrosting 8

Something not Working **8**

Service and Spare Parts **9**

Customer Care **9**

Guarantee Conditions **9**

Instructions for the Installer

Technical data **10**

Installing the Appliance **11**
Transportation, Unpacking 11
Cleaning 11
Location 11
Ventilation Requirements 12
Leveling 12

Door Reversal **12**

Electrical Connection **13**

Storage Charts **14**

Download from Www.Somanuals.com. All Manuals Search And Download.

INSTRUCTIONS FOR THE USER

General information

This appliance is designed for the refrigeration of food in a domestic home. It also has an ice-making compartment.

To ensure correct operation, this appliance should be located where the ambient temperature is between 16-32 °C.

Description of the appliance, main parts

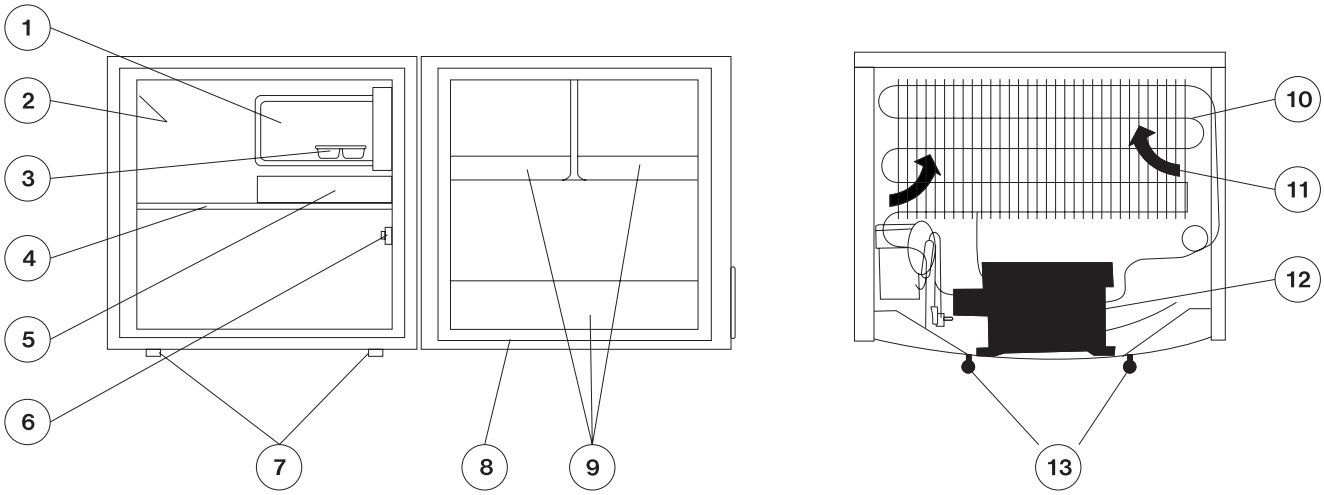

1. Ice-making compartment
2. Rating Plate
3. Ice tray
4. Wire shelf
5. Drip tray
6. Thermostat
7. Feet
8. Door gasket
9. Door compartment
10. Condenser
11. Air circulation
12. Compressor
13. Spacer

Download from Www.Somanuals.com. All Manuals Search And Download.

Using the Appliance

Befor Use

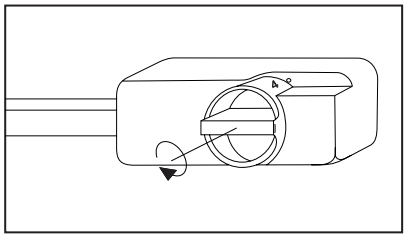

Remove all securing tapes.
Wash the inside of the appliance with lukewarm water with a little bicarbonate of soda added (5 ml to 0,5 litre of water). Do not use soap or detergent as the smell may linger. Dry the appliance thoroughly.

⚠ *Do not use detergents, abrasive powders, highly perfumed cleaning products, wax polishes or products containing alcohol.*

☞ To Start the Appliance

1. Allow the appliance to stand for 2 hrs after installation.
2. Plug in the appliance and switch on at the mains supply.
3. Turn the thermostat control to the required setting. A setting of 4 is usually suitable for normal operation (see thermostat control).
4. Leave the appliance for approximately 4 hours for the correct temperature to be reached before placing food inside.

Thermostat Control

The thermostat control situated inside the refrigerator regulates the temperature of the refrigerator and ice-making compartment. Thermostat control is marked from 1-7 the higher the number, the colder the setting.

Position 0 - Off
Position 1 - Cold
Position 7 - Coldest

Hints for storage

When placing the different kinds of food take into consideration the sketch below in figure:

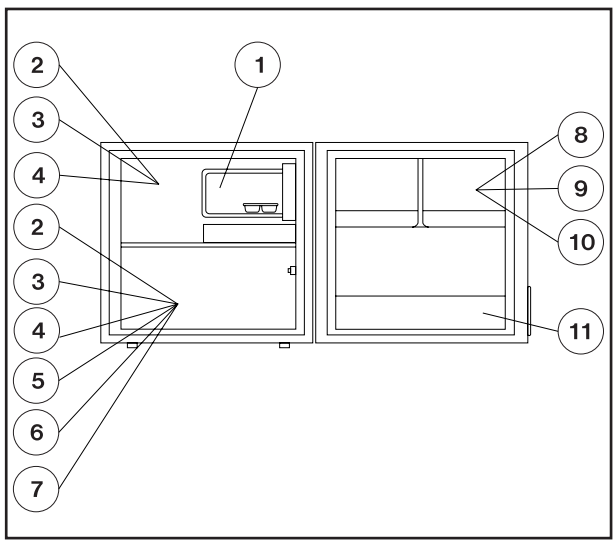

1. Making ice cubes.
2. Ready-cooked foods
3. Convenience foods
4. Opened cans
5. Milk, dairy products
6. Fresh meat, cold cuts, sausages, etc.
7. Fruits, vegetables, salads
8. Cheese, butter
9. Eggs
10. Yoghurt, sour cream
11. Bottles, drinks

Download from Www.Somanuals.com. All Manuals Search And Download.

Storage Shelf

The sorage shelf has a foldable section on the left hand side which can be raised to enable the storage of large bottles.

The Ice-making Compartment

This compartment is suitable for the storage of commercially frozen food and for making and storing ice cubes.

Hints & Tips

Food Storage

- To obtain the best results from your appliance neither hot foods nor liquids which may evaporate, should be placed in the refrigerator.
- Keep the time between buying chilled food and placing it in your fridge as short as possible.
- Do not push food together too much, try to allow air to circulate around each item.
- Do not store food uncovered.
- Remove suspect food from your refrigerator and clean, refer to Cleaning and Maintenance.

Frozen food storage

Storing ready-frozen foods is quite straightforward. The packs can be placed beside each other or on top of each other.

You are strongly advised to place ready-frozen food in the compartment as quickly as possible after purchase and we therefore recommend that you buy them last. Also ensure that the external packaging is intact.

Packaging which is swollen or has traces of refrozen water droplets on the pack could indicate that the product has not been kept at a suitable temperature and that it may have lost its original quality.

Partially thawed food must not be refrozen, it must be consumed within 24 hours.

Never exceed the storage times indicated.

Do not open the ice-making compartment door too often and do not leave open longer than necessary.

Important

In the event of a power cut the food in the ice-making compartment will not be affected if the power cut is short and if the compartment is full. Do not open the door. Should the food begin to thaw, it must be consumed quickly and must not be refrozen.

Energy Saving Advice

- Do not install the cabinet close to sources of heat, such as a cooker, dishwasher or radiator.
- Locate the appliance in a cool well ventilated room and make sure that the air openings of the cabinet are not obstructed.
- Always leave warm food to cool down to room temperature before placing in the fridge.
- Try to avoid keeping the door open for long periods, or opening the door too frequently as warm air will enter the cabinet, and cause the compressor to switch on unnecessarily often.
- Ensure there are no obstructions preventing the door from closing properly.
- It is advisable to periodically clean the refrigeration system at the back of the appliance with a duster or vacuum cleaner.

Maintenance & Cleaning

Before any maintenance of cleaning work is carried out DISCONNECT the appliance from the ELECTRICITY SUPPLY.

Internal Cleaning

Clean the inside and accessories with warm water and bicarbonate of soda (5 ml to 0.5 litre of water). Rinse and dry thoroughly.

Download from Www.Somanuals.com. All Manuals Search And Download.

⚠ ***NEVER use detergents, abrasive powders, highly perfumed cleaning products or wax polishes to clean the interior as these will damage the surface and leave a strong odour.***

External Cleaning

Wash the outer cabinet with warm soapy water.

When the appliance is not in use

When the appliance is not in use for long periods, disconnect from the electricity supply, empty all foods and clean the appliance, leaving the door open to prevent unpleasant smells.

Defrosting

While the appliance is in operation the ice-making compartment becomes progressively covered with frost.

This frost, acts as an insulator and prevents the cold from reaching the insulator food. The frost should be removed whenever the thickness of the frost exceeds 1/4". To carry out complete defrosting proceed as follows.

Pull out the plug from the wall socket or turn the thermostat control knob to the '0' position.

Leave the fridge and ice-making compartment doors open, when defrosting is completed, dry the appliance thoroughly. Remove any defrost water collected in the tray.

Replace the plug in the socket or return the thermostat to the initial position and, after letting the appliance run for at least an hour, place the food in the evaporator compartment.

Something Not Working

If the appliance is not working correctly, please carry out the following checks before contacting your local Tricity Bendix Service Force Centre.

Problem	Possible Cause	Solution
No power to the appliance	No power at the socket.	Check there is power at the socket.
	There is a power cut.	Check there is not a power cut by checking the household lights.
	The fuse has blown.	Check the fuse has not blown.
	Thermostat control is set at „0".	Check the thermostat.
The temperature in the appliance is too high	The appliance is located in an unsuitable position.	Check the ambient temperature is within the appliances operating limits of 16 °C to 32 °C.
	The thermostat control is set too low.	Check that the thermostat is turned to the correct setting relative to ambient conditions.
The temperature in the appliance is too low	The thermostat control is set too high.	Set the thermostat to a lower position.
Excessive frost and ice has built up	The door has been left open.	Check the door has not been left open.
	Something is obstructing the door.	Check nothing is preventing the door from closing.
	The door gasket is dirty.	Check the door gasket is intact and clean.
The appliance is noisy.	The appliance is not level.	Check if the appliance stands stable (all four feet should be on the floor).

If after the above checks your appliance still does not operate correctly, contact your local Tricity Bendix Service Force Centre.

Please note that it will be necessary to provide proof of purchase for any in-guarantee service calls.

In-guarantee customers should ensure that the above checks have been made, as the engineer will make a charge if the fault is not a mechanical or electrical breakdown.

Download from Www.Somanuals.com. All Manuals Search And Download.

Service and Spare Parts

In the event of your appliance requiring service, or if you wish to purchase spare parts please contact your local Tricity Bendix Service Force Centre by telephoning:

08705 929929

Your call will be routed the Service Force Centre covering your post code area.

For the address of your local Service Force Centre and further information about Service Force, please visit the website at www.serviceforce.co.uk

For service in the **Republic of Ireland** contact
Tricity Bendix
Long Mile Road
Dublin 12

Telephone: 01 4090752.

Before calling out an engineer, please ensure you have read the details under the heading 'Something Not Working?'.

When you contact the Service Centre you will need to give the following details:

1. Your name, address and post code
2. Your telephone number
3. Clear and concise details of the fault
4. The model and serial number of the appliance (found on the rating plate)
5. The purchase date

Please note that a valid purchase receipt or guarantee documentation is required for in-guarantee service calls.

Customer Care Department

For general enquiries concerning your Tricity Bendix appliance or for further information on Tricity Bendix products, you are invited to contact our Customer Care Department by letter or telephone as follows:

Customer Care Department
Tricity Bendix
55-77 High Street
Slough
Berkshire
SL1 1DZ

Tel: 08705 950950 calls to this number may be recorded for training purposes.

Peace of Mind for Twelve Months

Tricity Bendix standard guarantee conditions

This guarantee is in addition to your statutory and other legal rights.

We Tricity Bendix undertake that if within 12 months of the date of the purchase this TRICITY BENDIX appliance or any part thereof is proved to be defective by reason only of faulty workmanship or materials, we will, at our option, repair or replace the same FREE OF ANY CHARGE for labour, materials or carriage on condition that:

- The appliance has been installed correctly and used only on the electrical supply stated on the rating plate.
- The appliance has been used for normal domestic purposes only, and in accordance with the manufacturer's operating and maintenance instructions.
- The appliance has not been serviced, maintained, repaired, taken apart or tampered with, by any person not authorised by us.
- All service work under this guarantee must be undertaken by a Tricity Bendix service Representative or authorised agent.
- Any appliance or defective part replaced shall become our property.

Download from Www.Somanuals.com. All Manuals Search And Download.

Home visits are made between **8.30am** and **5.30pm Monday to Friday.** Visits may be available outside these hours in which case a charge will be made.

EXCLUSIONS

This Guarantee does not cover:

- Damage or calls resulting from transportation, improper use or neglect, the replacement of any light bulbs or removable parts of glass or plastic.
- Costs incurred for calls to put right an appliance which is improperly installed or calls to appliances outside the United Kingdom.
- Appliances found to be in use within a commercial environment, plus those which are the subject to rental agreements.
- Products of Tricity Bendix manufacture which are NOT marketed by Tricity Bendix Ltd.

EUROPEAN GUARANTEE

If you should move to another country within Europe then your guarantee moves with you to your new home subject to the following qualifications:

- The guarantee starts from the date you first purchased your product.
- The guarantee is for the same period and to the same extent for labour and parts as exists in the new country of use for this brand or range of products.
- This guarantee relates to you and cannot be transferred to another user.
- Your new home is within the European Community (EC) or European Free Trade Area.
- The product is installed and used in accordance with our instructions and is only used domestically, i.e. a normal household.

Before you move please contact your nearest Customer Care Centre, list below, to give them details of your new home. They will then ensure that the local Service Organisation is aware of your move and able to look after you and your appliances.

France	Senlis	+33 (0) 3 44 62 20 13
Germany	Nürnberg	+49 (0) 800 234 7378
Italy	Pordenone	+39 (0) 800117511
Sweden	Stockholm	+46 (0) 20 78 77 50
UK	Slough	+44 (0) 1753 219898

Instructions for the Installer

Technical data

Model	TB 25 TR
Gross capacity (l)	Ice-making comp.: 5 Fresh food com.: 65
Net capacity (l)	Ice-making comp.: 5 Fresh food com.: 62
Width (mm)	525
Height (mm)	520
Depth (mm)	587
Energy consumption (kWh/day) (kWh/year)	0.53 193
Energy class, according to EU Standards	B
Rated power (W)	70
Weight (kg)	24

Download from Www.Somanuals.com. All Manuals Search And Download.

Installing the appliance

Transportation, unpacking

The appliance and the interior fitting are protected for transport.

- Remove all packaging and any adhesive tape.
- Any remnants of adhesive can be removed using white spirit.
- After transportation the appliance must not be switched on for 2 hours. This is to allow the refrigerant to settle.

Cleaning

Clean the accessories and the inside of the appliance with warm water and bicarbonate of soda (5 ml to 0.5 litres of water). Rinse and dry thoroughly.

Do not use detergents, abrasive powders, highly perfumed cleaning products, wax polishes or cleaning products containing bleach or alcohol.

Location

The appliance should be positioned in a well ventilated, dry room.

Energy use is affected by the ambient temperature.

The appliance should therefore:

- not be installed next to radiators, cookers or other sources of heat
- only be installed at a location where the ambient temperature corresponds to the climate classification, for which the appliance is designed.

The climate classification can be found on the serial plate.

The following table shows which ambient temperature is correct for each climate classification:

Climate Classification	Ambient Temperature
SN	+10 to +32 °C
N	+16 to +32 °C
ST	+18 to +38 °C

If installation next to a source of heat is unavoidable, the following minimum clearances must be maintained at the sides of the appliance:

- for electric cookers 3 cm
- for oil and coal fired ranges 30 cm

Download from Www.Somanuals.com. All Manuals Search And Download.

Ventilation Requirements

The appliance must have adequate ventilation to ensure correct operation.

Diagram shows the ventilation requirements when installed:

A* Under a worktop, or cupboard.

* The clearance space of 10 cm above the appliance may be reduced to 5 cm providing a clearance space 2.5 cm is left on either side of the appliance.

B When freestanding

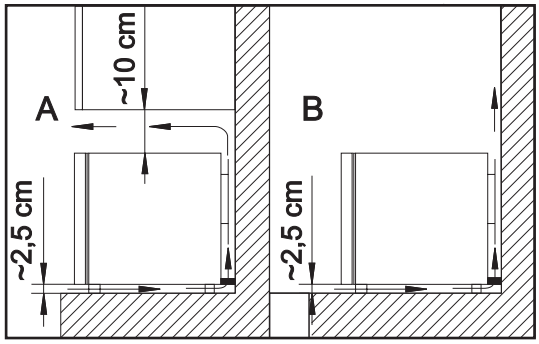

Door Reversal

If required the opening direction of the door can be changed as follows:

To reverse the bottom hinge assembly proceed as follows:

- Disconnect the appliance from the electricity supply.
- Remove the top hinge cover.
- Unscrew the 2 retaining screws, and remove the hinge from the appliance.
- Take the door off.

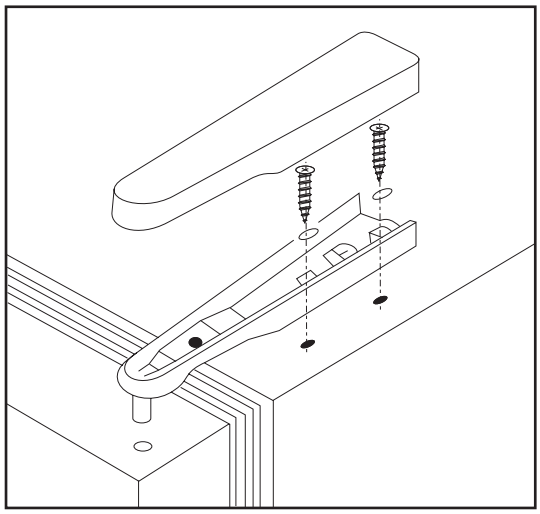

- Unscrew the lower hinge retaining screws, and remove the hinge according to the diagram.
- Fit the lower hinge on the opposite side.
- Fix the door onto the lower hinge pin.
- To fit top door hinge, remove the plastic blanking plugs carefully, and refit them in the holes left by the hinge retaining screws.
- Refit the top hinge using the 2 retaining screws, taking care that the edge of the door is parallel with side of the cabinet.
- Replace the hinge cover.

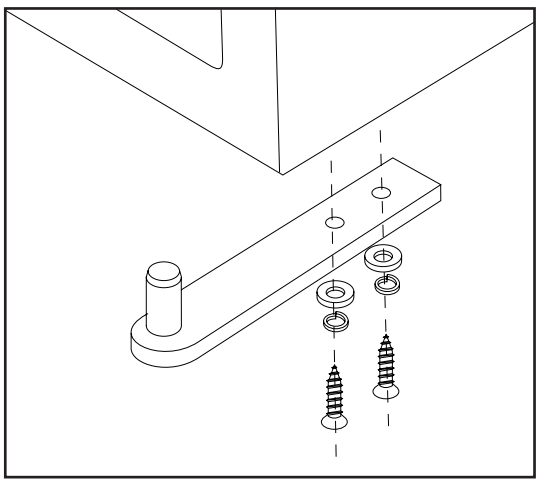

- Remove screw covers (if fitted) and handle retaining screws. Remove blanking plugs on the opposite side.
- Relocate the handle to the opposite side and refit retaining screws (covers if fitted), and replace the blanking plugs.

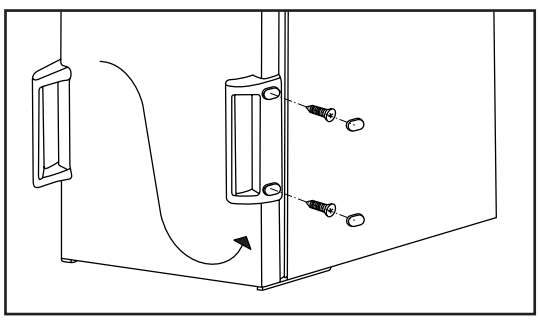

Download from Www.Somanuals.com. All Manuals Search And Download.

Electrical Connection

Any electrical work required to install this appliance should be carried out by a qualified electrician or competent person.

This appliance must be earthed.

The manufacturer declines any liability should these safety measures not be observed.

Electrical Requirements

Before switching on, make sure the electricity supply voltage is the same as that indicated on the appliance rating plate.

The appliance is supplied with a 13 amp plug fitted. In the event of having to change the fuse in the plug supplied, a 13 amp ASTA approved (BS 1362) fuse must be used. Should the plug need to be replaced for any reason. The wires in the mains lead are coloured in accordance with the following code:

Green and Yellow:	Earth
Blue:	Neutral
Brown:	Live

The wire coloured green and yellow must be connected to the terminal marked with the letter „E“ or by the earth symbol ⏚ or coloured green and yellow.

The wire coloured blue must be connected to the terminal „N“ or coloured black.

The wire coloured brown must be connected to the terminal marked „L“ or coloured red.

Upon completion there must be no cut, or stray strands of wire present and the cord clamp must be secure over the outer sheath.

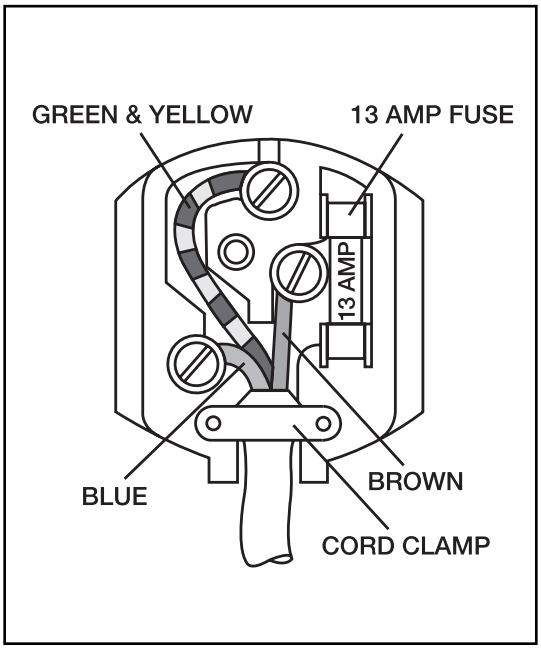

CE This appliance complies with the following E.E.C. Directives:

- **73/23 EEC** of 19.02.73 (Low Voltage Directive) and subsequent modifications,
- **89/336 EEC** of 03.05.89 (Electromagnetic Compatibility Directive) and subsequent modifications.

Download from Www.Somanuals.com. All Manuals Search And Download.

Storage time chart

Time and method of storage of fresh foods in the refrigerator

Foods	Storage time in days							Method of packaging
	1	2	3	4	5	6	7	
Raw meat	**X**	**X**	x	x	x			cling film, airtight
Cooked meat	**X**	**X**	**X**	x	x	x		dish covered
Roasted meat	**X**	**X**	**X**	x	x			dish covered
Raw minced meat	**X**							dish covered
Cooked minced meat	**X**	**X**	x	x				dish covered
Cold cuts	**X**	**X**	x	x				cling film, cellophane, grease-proof paper
Fresh fish	**X**	x	x					cling film, airtight
Cooked fish	**X**	**X**	x	x				dish covered
Tinned fish, open	**X**	x	x					dish covered
Fresh chicken	**X**	**X**	**X**	x	x	x		cling film, airtight
Fried chicken	**X**	**X**	**X**	x	x	x		dish covered
Fresh duck, goose	**X**	**X**	**X**	x	x	x		cling film, airtight
Roasted duck, goose	**X**	**X**	**X**	**X**	x	x	x	dish covered
Butter unopened	**X**	**X**	**X**	**X**	**X**	**X**	**X**	original packaging
Butter opened	**X**	**X**	x	x	x	x	x	original packaging
Milk	**X**	**X**	**X**	x	x			original packaging
Cream	**X**	**X**	x	x				plastic box
Sour cream	**X**	**X**	**X**	**X**	x	x	x	plastic box
Cheese (hard)	**X**	**X**	**X**	**X**	**X**	**X**	**X**	aluminium foil
Cheese (soft)	**X**	**X**	**X**	**X**	x	x	x	cling film
Egg	**X**	**X**	**X**	**X**	**X**	**X**	**X**	
Spinach, sorrel	**X**	**X**	x	x				cling film
Green peas, green beans	**X**	**X**	**X**	**X**	x	x	x	cling film
Mushroom	**X**	**X**	x	x	x			cling film
Carrot	**X**	**X**	**X**	**X**	**X**	**X**	**X**	cling film
Tomato	**X**	**X**	**X**	**X**	**X**	**X**	**X**	cling film
Cabbage	**X**	**X**	**X**	**X**	**X**	x	x	cling film
Strawberry, raspberry, etc.	**X**	**X**	**X**	x	x			cling film
Tinned fruits opened	**X**	**X**	**X**	x	x			dish covered
Cakes filled with cream	**X**	**X**	x	x				dish covered

Notation:

X recommended storage time
x maximum recommended storage time

Download from Www.Somanuals.com. All Manuals Search And Download.

Download from Www.Somanuals.com. All Manuals Search And Download.

The Electrolux Group is the world's largest producer of powered appliances for kitchen, cleaning and outdoor use. More than 55 million Electrolux Group products (such as refrigerators, cookers, vacuum cleaners, chain saws and lawn mowers) are sold each year to a value of approx. 14 billion USD in more than 150 countries around the world.

From the Electrolux Group. *The world's No.1 choice.*

© Electrolux Household Appliances Limited 2000

Printed by Xerox Hungary Ltd. 2002. 01. 23.

Download from Www.Somanuals.com. All Manuals Search And Download.

Free Manuals Download Website

http://myh66.com

http://usermanuals.us

http://www.somanuals.com

http://www.4manuals.cc

http://www.manual-lib.com

http://www.404manual.com

http://www.luxmanual.com

http://aubethermostatmanual.com

Golf course search by state

http://golfingnear.com

Email search by domain

http://emailbydomain.com

Auto manuals search

http://auto.somanuals.com

TV manuals search

http://tv.somanuals.com