BOSCH

**Register** your new device on MyBosch now and get free benefits:
**bosch-home.com/welcome**

MyBosch

# Fridge-freezer

**KGN..**

**en** Instructions for use Fridge-freezer 3

## en Table of contents


Safety and warning information ..... 3
Information concerning disposal ..... 6
Scope of delivery ..... 6
Installation location ..... 7
Observe ambient temperature and ventilation ..... 7
Connecting the appliance ..... 8
Getting to know your appliance ..... 8
Switching on the appliance ..... 10
Setting the temperature ..... 10
Special functions ..... 10
Alarm function ..... 11
Usable capacity ..... 12
Refrigerator compartment ..... 12
Super cooling ..... 13
Freezer compartment ..... 14
Max. freezing capacity ..... 14
Freezing and storing food ..... 14
Freezing fresh food ..... 15
Super freezing ..... 16
Thawing frozen food ..... 16
Interior fittings ..... 16
Sticker “OK” ..... 17
Switching off and disconnecting the appliance ..... 17
Cleaning the appliance ..... 18
Light (LED) ..... 19
Tips for saving energy ..... 19
Operating noises ..... 19
Eliminating minor faults yourself ..... 20
Appliance self-test ..... 22
Customer service ..... 22

# Safety and warning information

## Before you switch ON the appliance

Please read the operating and installation instructions carefully! They contain important information on how to install, use and maintain the appliance.

The manufacturer is not liable if you fail to comply with the instructions and warnings. Retain all documents for subsequent use or for the next owner.

## Technical safety



Fire hazard

The tubes of the refrigeration circuit convey a small quantity of an environmentally friendly but flammable refrigerant (R600a). It does not damage the ozone layer and does not increase the greenhouse effect. If refrigerant escapes, it may injure your eyes or ignite.

## If damage has occurred

- Keep naked flames and/or ignition sources away from the appliance,
- thoroughly ventilate the room for several minutes,
- switch off the appliance and pull out the mains plug,
- inform customer service.

The more refrigerant an appliance contains, the larger the room must be in which the appliance is situated. Leaking refrigerant can form a flammable gas-air mixture in rooms which are too small. The room must be at least 1 $m^3$ per 8 g of refrigerant. The amount of refrigerant in your appliance is indicated on the rating plate inside the appliance.

When installing the appliance, ensure that the mains cable is not trapped or damaged.

If the power cord of this appliance is damaged, it must be replaced by the manufacturer, Customer Service or a similarly qualified person. Improper installations and repairs may put the user at considerable risk.

Repairs may be performed by the manufacturer, customer service or a similarly qualified person only.

Only original parts supplied by the manufacturer may be used. The manufacturer guarantees that only these parts satisfy the safety requirements.

Do not use multiple sockets, extension leads or adapters.



Fire hazard

Portable multiple outlets or power supplies may overheat, causing a fire.
Never leave portable multiple outlets or portable power supplies behind the appliance.

## Important information when using the appliance

- Never use electrical appliances inside the appliance (e.g. heaters, electric ice makers, etc.). Risk of explosion!
- Never defrost or clean the appliance with a steam cleaner! The steam may penetrate electrical parts and cause a short-circuit. Risk of electric shock!
- Do not use additional means to accelerate the defrosting process other than those recommended by the manufacturer. Risk of explosion!
- Do not use pointed or sharp-edged implements to remove frost or layers of ice. You might damage the refrigerant tubes.Leaking refrigerant may cause eye injuries or ignite.
- Do not store products which contain flammable propellant (e.g. spray cans) or explosive substances in the appliance. Risk of explosion!
- Do not stand on or lean heavily against the base of the appliance, drawers, doors, etc.
- For defrosting and cleaning, pull out the mains plug or switch off the fuse. Do not pull out the mains plug by tugging on the power cord.
- Store high-percentage alcohol tightly sealed and in an upright position.
- Keep plastic parts and the door seal free of oil and grease. Otherwise, plastic parts and the door seal will become porous.
- Never cover or block the ventilation openings of the appliance.
- Do not store bottled or canned liquids (especially carbonated drinks) in the freezer compartment.Bottles and cans may burst!
- Never put frozen food straight from the freezer compartment in your mouth.
  Risk of low-temperature burns!

- **Avoiding placing children and vulnerable people at risk:**

  At risk here are children, people who have limited physical, mental or sensory abilities, as well as people who have inadequate knowledge concerning safe operation of the appliance.

  Check that children and vulnerable people have understood the hazards.

  A person responsible for safety must supervise or instruct children and vulnerable people who are using the appliance.

  Only children aged 8 years and above may use the appliance.

  Supervise children while the appliance is being cleaned or maintained.

  Never allow children to play with the appliance.
- Avoid prolonged touching of frozen food, ice or the evaporator pipes, etc.
  Risk of low-temperature burns!

## Children in the household

- Keep children away from packaging and its parts.
  Danger of suffocation from folding cartons and plastic film!
- Do not allow children to play with the appliance!
- If the appliance features a lock:
  keep the key out of the reach of children!

## General regulations

The appliance is suitable

- for refrigerating and freezing food,
- for making ice.

This appliance is intended for use in the home and the home environment.

The refrigeration circuit has been checked for leaks.

This appliance complies with the relevant safety regulations for electrical appliances and is fitted with noise suppression.

This appliance is intended for use up to a maximum height of 2000 metres above sea level.

# Information concerning disposal

## ♻ Disposal of packaging

The packaging protects your appliance from damage during transit. All utilised materials are environmentally safe and recyclable. Please help us by disposing of the packaging in an environmentally friendly manner.

Please ask your dealer or inquire at your local authority about current means of disposal.

## ♻ Disposal of your old appliance

Old appliances are not worthless rubbish! Valuable raw materials can be reclaimed by recycling old appliances.



This appliance is labelled in accordance with European Directive 2012/19/EU concerning used electrical and electronic appliances (waste electrical and electronic equipment - WEEE). The guideline determines the framework for the return and recycling of used appliances as applicable throughout the EU.

**⚠ Warning**

Redundant appliances

1. Pull out the mains plug.
2. Cut off the power cord and discard with the mains plug.
3. Do not take out the trays and receptacles: children are therefore prevented from climbing in!
4. Do not allow children to play with the appliance once it has spent its useful life. Danger of suffocation!

Refrigerators contain refrigerant and gases in the insulation. Refrigerant and gases must be disposed of professionally. Ensure that tubing of the refrigerant circuit is not damaged prior to proper disposal.

# Scope of delivery

After unpacking all parts, check for any damage in transit.

If you have any complaints, please contact the dealer from whom you purchased the appliance or our customer service.

The delivery consists of the following parts:

- Free-standing appliance
- Interior fittings (depending on model)
- Bag containing installation materials
- Operating instructions
- Installation manual
- Customer service booklet
- Warranty enclosure
- Information on the energy consumption and noises

# Installation location

A dry, well ventilated room is suitable as an installation location. The installation location should not be exposed to direct sunlight and not placed near a heat source, e.g. a cooker, radiator, etc. If installation next to a heat source is unavoidable, use a suitable insulating plate or observe the following minimum distances from the heat source:

- 3 cm to electric or gas cookers.
- 30 cm to an oil or coal-fired cooker.

The floor of the installation location must not give way; if required, reinforce floor. If the floor is uneven, compensate with supports.

## Distance from wall

When installing the appliance, ensure that the door can be opened by 90°.

# Observe ambient temperature and ventilation

## Ambient temperature

The appliance is designed for a specific climate class. Depending on the climate class, the appliance can be operated at the following temperatures.

The climate class can be found on the rating plate. Fig. **14**

| Climate class | Permitted ambient temperature |
|---|---|
| **SN** | +10 °C to 32 °C |
| **N** | +16 °C to 32 °C |
| **ST** | +16 °C to 38 °C |
| **T** | +16 °C to 43 °C |

**Note**

The appliance is fully functional within the room temperature limits of the indicated climatic class. If an appliance of climatic class SN is operated at colder room temperatures, the appliance will not be damaged up to a temperature of +5 °C.

## Ventilation

Fig. **2**

The air on the rear panel and on the side panels of the appliance heats up. Conduction of the heated air must not be obstructed. Otherwise, the refrigerating unit must work harder. This increases power consumption. Therefore: Never cover or block the ventilation openings!

# Connecting the appliance

After installing the appliance, wait at least 1 hour until the appliance is switched on. During transportation the oil in the compressor may have flowed into the refrigeration system.

Before switching on the appliance for the first time, clean the interior of the appliance (see chapter “Cleaning the appliance”).

## Electrical connection

The socket must be near the appliance and also freely accessible following installation of the appliance.

**⚠ Warning**

Risk of electric shock!

If the length of the mains cable is inadequate, never use multiple sockets or extension leads. Instead, please contact Customer Service for alternatives.

The appliance complies with protection class I. Connect the appliance to 220–240 V/50 Hz alternating current via a correctly installed socket with protective conductor. The socket must be protected by a 10 A to 16 A fuse.

For appliances operated in non-European countries, check whether the indicated voltage and current type match the values of your electricity supply. This information can be found on the rating plate, Fig. **14**.

**⚠ Warning**

Never connect the appliance to electronic energy saver plugs.

Our appliances can be used with mains and sine-controlled inverters. Mains-controlled inverters are used for photovoltaic systems which are connected directly to the national grid. Sine-controlled inverters must be used for isolated applications (e.g. on ships or in mountain lodges) which are not connected directly to the national grid.

# Getting to know your appliance

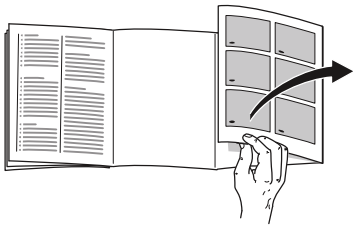

Please fold out the illustrated last page. These operating instructions refer to several models.

The features of the models may vary.

The diagrams may differ.

Fig. **1**

* Not all models.

A Refrigerator compartment
B Freezer compartment

1–15 Controls
16* Butter and cheese compartment
17 Shelf for small bottles
18 Shelf for large bottles

19 Light (LED)
20* Bottle shelf
21* Breakfast set
22 Cold storage compartment
23 Vegetable container with humidity control
24* Frozen food container

## Controls

Fig. 4

1 **Temperature display freezer compartment**
The numbers correspond to the set freezer compartment temperatures in °C.

2 **Display – ALARM –**
This lights up if the freezer compartment is too warm or if the freezer compartment door is open too long.

3 **Display superfreeze**
This lights up if super freezing is in operation.

4 **Display freshness mode**
This lights up when the freshness mode is switched on.

5 **Eco mode indicator**
This lights up when the eco mode is switched on.

6 **Alarm display**
This lights up if the refrigerator compartment door is open too long.

7 **Temperature display refrigerator compartment**
The numbers correspond to the set refrigerator compartment temperatures in °C.

8 **Display supercool**
This lights up if super cooling is in operation.

9 **Display vacation mode**
This lights up when the vacation mode is switched on.

10 **Button “lock” function**
If this function is switched on, no settings are possible via the controls.

11 **Button lock/alarm off**
This button is used to

- switch off the audible warning signal (see section "Alarm function")
- Switch the button lock on and off.

12 **Setting buttons +/-**
The buttons are used to set the temperatures of the refrigerator and freezer compartment.

13 **°C button to select a section**
Used to select a section. This is necessary to change its temperature or to switch on certain special functions.

14 **Super button**
Used to switch on the functions supercool (fridge compartment) and superfreeze (freezer compartment).

15 **Button mode**
Selecting the special functions.

# Switching on the appliance

1. First insert the plug into the connection on the back of the appliance. Check that the plug has been inserted all the way.
2. Then insert the other end of the cable into the socket.

The appliance is now switched on and a warning signal sounds.

Press the lock/alarm off button to switch off the audible warning signal.

The – ALARM – display goes out when the appliance has reached the set temperature.

The preset temperatures are reached after several hours. Do not put any food in the appliance beforehand.

The factory has recommended the following temperatures:

- Freezer compartment: -18 °C
- Refrigerator compartment: +4 °C

## Operating tips

- After the appliance has been switched on, it may take several hours until the set temperatures have been reached.
- The fully automatic NoFrost system ensures that the freezer section remains free of ice. Defrosting is no longer required.
- If the door cannot be immediately re-opened after it has been closed, wait until the resulting low pressure has equalised.
- The front and side panels of the housing are partly heated slightly.This prevents condensation from forming.

# Setting the temperature

Fig. **4**

## Refrigerator section

The temperature can be set from +2°C to +8°C.

1. Select the refrigerator section using the °C button.
2. Keep pressing the +/- buttons until the required temperature is indicated.

Perishable food should not be stored above +4 °C.

## Freezer compartment

The temperature can be set from -16°C to -24°C.

1. Select the freezer compartment using the °C button.
2. Keep pressing the +/- buttons until the required temperature is indicated.

# Special functions

Fig. **4**

## Fresh mode

Fresh mode gives food an even longer shelf life.

**Switching on:**
Press the mode button until the freshness mode display appears.

The appliance automatically sets the following temperatures:

- Refrigerator section: + 2°C
- Freezer section: remains unchanged

**Switching off:**
Press the mode button repeatedly until the freshness mode display goes off.

## Eco mode

Eco mode switches the appliance to energy-saving operation.

**Switching on:**
Press the mode button until the "eco mode" indicator appears.

The appliance automatically sets the following temperatures:

- Refrigerator section: +8°C
- Freezer section: -16°C

**Switching off:**
Press the mode button until the "eco mode" indicator goes off.

## Holiday mode

If leaving the appliance for a long period of time, you can switch the appliance over to the energy-saving holiday mode.

The temperature of the refrigerator compartment is automatically switched to +14 °C.

Do not store any food in the refrigerator compartment during this time.

**Switching on:**
Press the mode button repeatedly until the vacation mode display appears.

The appliance automatically sets the following temperatures:

- Refrigerator section: +14°C
- Freezer compartment: remains unchanged

**Switching off:**
Press themode button repeatedly until the vacation mode display goes off.

## Button lock function

To switch the button lock on and off, press the lock/alarm off button for 5 seconds.

When the function is switched on, the ⊶ display lights up.

The control panel is now protected against unintentional operation.

**Exception to the button lock:**
The lock/alarm off button can be pressed to switch off the button lock or if an audible warning signal sounds.

# Alarm function

In the following cases an alarm may be actuated.

## Door alarm

The door alarm switches on and – ALARM – appears in the refrigerator compartment temperature display 7 or in the freezer compartment temperature display 1 if the door of the compartment is left open too long. Close the door of the compartment to switch off the door alarm.

## Temperature alarm

An interval tone sounds, – ALARM – appears on the temperature display of the freezer compartment 1.

The temperature alarm switches on if the freezer compartment is too warm and the frozen food is at risk of thawing.

The alarm may switch on without any risk to the frozen food in the following instances:

- when switching on the appliance for initial use.

- when large quantities of fresh food are placed in the appliance.

**Note**

Do not refreeze thawing or thawed food. Only ready meals (boiled or fried) may be refrozen.

No longer store the frozen produce for the max. storage period.

The temperature display indicates for 5 seconds the warmest temperature which was reached in the freezer compartment. Then the set temperature is displayed again.

### Switching off the alarm

Press the lock/alarm off button to switch off the audible warning signal.

## Usable capacity

Information on the usable capacity can be found inside your appliance on the rating plate. Fig. 14

### Fully utilising the freezer volume

To place the maximum amount of frozen food in the freezer compartment, you can remove the containers. You can then stack the food directly on the shelf and on the floor of the freezer compartment.

**Note**

Avoid contact between food and rear panel. Otherwise the air circulation will be impaired.

Food or packaging could freeze to the rear panel.

**Removing the fittings**

Pull out the frozen food container all the way, lift at the front and remove. Fig. 10

## Refrigerator compartment

The refrigerator compartment is the ideal storage location for meat, sausage, fish, dairy products, eggs, ready meals and pastries.

### Storing food

- Store fresh, undamaged food. The quality and freshness will then be retained for longer.
- In the case of ready-made products and bottled goods, observe the best-before date or use-by date specified by the manufacturer.
- To retain aroma, colour and freshness, pack or cover food well before placing in the appliance. This will prevent the transfer of flavours and the discolouration of plastic parts in the refrigerator compartment.
- Allow warm food and drinks to cool down before placing in the appliance.

**Note**

Do not block air outlet openings with food, otherwise the air circulation will be impaired. Food which is stored directly in front of the air outlet openings may be frozen by the cold air flowing out.

### Note the chill zones in the refrigerator compartment

The air circulation in the refrigerator compartment creates different chill zones:

- The coldest zones are in front of the air outlet openings and in the chill compartment, Fig. 1/22.

**Note**

Store perishable food (e.g. fish, sausage, meat) in the coldest zones.

- Warmest zone is at the very top of the door.

**Note**

Store e.g. hard cheese and butter in the warmest zone. The aroma of hard cheese can then continue to develop and butter remains spreadable.

## Vegetable container with humidity control

Fig. 8
To create the optimum storage climate for fruit and vegetables, you can set the humidity level in the vegetable container:

- Mainly vegetables as well as for a mixed or small load – high air humidity
- Mainly fruit as well as for a large load – low air humidity

**Notes**

- Fruit sensitive to cold (e.g. pineapple, banana, papaya and citrus fruit) and vegetables sensitive to cold (e.g. aubergines, cucumbers, zucchini, peppers, tomatoes and potatoes) should be stored outside the refrigerator at temperatures of approx. +8 °C to +12 °C for optimum preservation of quality and flavour.
- Condensation may form in the vegetable container depending on the type and quantity of products stored. Remove condensation with a dry cloth and adjust air humidity in the vegetable container with the humidity controller.

## Cold storage compartment

Fig. 9
The cold storage compartment has lower temperatures than the refrigerator compartment. Even temperatures below 0 °C may occur.

Ideal for storing fish, meat and sausage. Not suitable for lettuce and vegetables and produce sensitive to cold.

The temperature of the chill compartments can be varied using the ventilation opening. Push temperature controller upwards to reduce the temperature. Push temperature controller downwards to increase the temperature. Fig. 7

# Super cooling

Super cooling sets the refrigerator temperature to the coldest temperature setting for approx. 6 hours. Then the appliance automatically switches to the temperature set prior to super cooling mode.

Switch on super cooling mode, e.g.

- before placing large quantities of food in the refrigerator compartment.
- for the fast cooling of drinks.

## Switching on and off

Fig. 4

1. Select the refrigerator section using the °C button.
2. Press super button.

   The supercool indicator lights up.

You do not need to switch off super cooling.After 6 hours the previously set temperature will be automatically restored.

**Note**
When super cooling is switched on, increased operating noises may occur.

# Freezer compartment

## Use the freezer compartment

- To store deep-frozen food.
- To make ice cubes.
- To freeze food.

**Note**
Ensure that the freezer compartment door has been closed properly. If the door is open, the frozen food will thaw. The freezer compartment will become covered in thick ice. Also: waste of energy due to high power consumption!

# Max. freezing capacity

Information about the max. freezing capacity within 24 hours can be found on the rating plate. Fig. 14

## Prerequisites for max. freezing capacity

- Switch on super freezing before placing fresh products in the compartment (see chapter entitled “Super freezing”).
- Remove containers; stack food directly on the shelf and on the floor of the freezer compartment.
- Freeze large quantities of food preferably in the very top compartment where food freezes particularly quickly and therefore also gently.

# Freezing and storing food

## Purchasing frozen food

- Packaging must not be damaged.
- Use by the “use by” date.
- Temperature in the supermarket freezer must be -18 °C or lower.
- If possible, transport deep-frozen food in an insulated bag and place quickly in the freezer compartment.

## Note when loading products

- Preferably freeze large quantities of food in the top compartment, where food freezes particularly quickly and therefore also gently.
- Place the food over the whole area of the compartments or the frozen food containers.

  **Note**
  Food which is already frozen must not come into contact with the food which is to be frozen. If required, move the frozen food to other frozen food containers.

## Storing frozen food

Insert frozen food container all the way to ensure unrestricted air circulation.

# Freezing fresh food

Freeze fresh and undamaged food only.

To retain the best possible nutritional value, flavour and colour, vegetables should be blanched before freezing. Aubergines, peppers, zucchini and asparagus do not require blanching.

Literature on freezing and blanching can be found in bookshops.

**Note**

Keep food which is to be frozen away from food which is already frozen.

- The following foods are suitable for freezing:
  Cakes and pastries, fish and seafood, meat, game, poultry, vegetables, fruit, herbs, eggs without shells, dairy products such as cheese, butter and quark, ready meals and leftovers such as soups, stews, cooked meat and fish, potato dishes, soufflés and desserts.
- The following foods are not suitable for freezing:
  Types of vegetables, which are usually consumed raw, such as lettuce or radishes, eggs in shells, grapes, whole apples, pears and peaches, hard-boiled eggs, yoghurt, soured milk, sour cream, crème fraîche and mayonnaise.

## Packing frozen food

To prevent food from losing its flavour or drying out, place in airtight containers.

1. Place food in packaging.
2. Remove air.
3. Seal the wrapping.
4. Label packaging with contents and date of freezing.

**Suitable packaging:**
Cling wrap, tubular film made of polyethylene, aluminium foil, freezer containers.
These products are available from specialist outlets.

**Unsuitable packaging:**
Wrapping paper, greaseproof paper, cellophane, bin liners and used shopping bags.

**Items suitable for sealing packaged food:**
Rubber bands, plastic clips, string, cold-resistant adhesive tape, etc.

Bags and tubular film made of polyethylene (PE) can be sealed with a film heat sealer.

## Shelf life of frozen food

Storage duration depends on the type of food.

At a temperature of -18 °C:

- Fish, sausage, ready meals and cakes and pastries:
  up to 6 months
- Cheese, poultry and meat:
  up to 8 months
- Vegetables and fruit:
  up to 12 months

# Super freezing

Food should be frozen solid as quickly as possible in order to retain vitamins, nutritional value, appearance and flavour.

Several hours before placing fresh food in the freezer compartment, switch on super freezing to prevent an unwanted temperature rise.

As a rule, 4–6 hours is adequate.

This appliance runs constantly and the freezer compartment drops to a very low temperature.

If the max. freezing capacity is to be used, super freezing must be switched on for 24 hours before the fresh produce is placed in the freezer compartment.

Smaller quantities of food (up to 2 kg) can be frozen without “super freezing”.

**Note**

When super freezing is switched on, increased operating noises may occur.

## Switching on and off

Fig. 4

1. Select the freezer section using the °C button.
2. Press super button.
   The superfreeze indicator lights up.

You do not need to switch off super freezing.After approx. 2½ days the previously set temperature will be automatically restored.

# Thawing frozen food

Depending on the type and application, select one of the following options:

- at room temperature
- in the refrigerator
- in an electric oven, with/without fan assisted hot-air
- in the microwave

**⚠ Caution**

Do not refreeze thawing or thawed food. Only ready meals (boiled or fried) may be refrozen.

No longer store the frozen produce for the max. storage period.

# Interior fittings

## Shelves and containers

You can reposition the inner shelves and the containers in the door as required: pull shelf forwards, lower and swivel out to the side. Lift the container and remove.

## Special features

(not all models)

**Butter and cheese compartment**
To open the butter compartment, gently press in the middle of the butter compartment flap.

To clean the compartment, lift it at the bottom and take out.

**Breakfast set**
Fig. 5

The containers for the breakfast set can be taken out and filled individually.

You can take out the breakfast set for loading and unloading. To do this, lift the breakfast set and pull out. The container holder can be moved.

**Bottle shelf**
Fig. 6
Bottles can be stored securely on the bottle shelf.

**Ice cube tray**
Fig. 13

1. Fill the ice cube tray ¾ full of drinking water and place in the freezer compartment.
2. If the ice tray is stuck to the freezer compartment, loosen with a blunt implement only (spoon-handle).
3. To loosen the ice cubes, twist the ice tray slightly or hold briefly under flowing water.

**Freezer calendar**
Fig. 12

To prevent the quality of the frozen food from deteriorating, do not exceed the storage duration. The figures next to the symbols indicate the permitted storage period of the produce in months. In the case of commercially available frozen food observe the date of manufacture or use-by date.

**Ice block**
If a power failure or malfunction occurs, the ice blocks can be used to slow down the thawing process. The longest storage time is obtained by placing the ice pack on the food in the top compartment.

The ice blocks can also be used to cool food temporarily , e. g. in a cold bag.

# Sticker “OK”

(not all models)

The sticker “OK” lets you check whether the refrigerator compartment achieves the safe temperature ranges of +4 °C or colder recommended for food. If the sticker does not indicate “OK”, gradually reduce the temperature.

**Note**
When the appliance is switched on, it may take up to 12 hours until the set temperature is reached.




**Correct setting**

# Switching off and disconnecting the appliance

## Switching off the appliance

Press "+" button for 10 seconds. Refrigeration unit switches off.

## Disconnecting the appliance

If you do not use the appliance for a prolonged period:

1. Pull out the mains plug or switch off the fuse.
2. Clean the appliance.
3. Leave appliance doors open.

**Note**

To avoid damage to the appliance, appliance doors must be opened far enough that they remain in that position on their own. Do not jam any objects into the door to prop it open.

# Cleaning the appliance

**⚠ Caution**

- Do not use abrasive, chloride or acidic cleaning agents or solvents.
- Do not use scouring or abrasive sponges.

  The metallic surfaces could corrode.
- Never clean shelves and containers in the dishwasher.

  The parts may become deformed!

**The cleaning water must not get into the following areas:**

- Controls
- Illumination
- Ventilation openings
- Openings in the separating plate

## Proceed as follows:

1. Pull out the mains plug or switch off the fuse.
2. Take out the frozen food and store in a cool location. Place ice pack (if available) on the food.
3. The rinsing water must not drip into the controls, lighting, ventilation openings or the openings in the partition!

   Clean the appliance with a soft cloth, lukewarm water and a little pH-neutral washing-up liquid.
4. Wipe the door seal with clear water only and then wipe dry thoroughly.
5. After cleaning reconnect the appliance.
6. Put the frozen food back into the appliance.

## Interior fittings

All variable parts of the appliance can be taken out for cleaning.

**Take out shelves in the door**
Fig. 3

Lift shelves upwards and take out.

**Take out glass shelves**
Pull the glass shelves forwards and take out.

**Removing the container**
Fig. 9

Pull out the container all the way, lift at the front and remove.

**Taking out the frozen food container**
Fig. 10

Pull out the frozen food container all the way, lift at the front and remove.

**Taking out glass shelf above vegetable container**
Fig. 11

The glass shelf can be taken out and disassembled for cleaning.

**Note**

Before taking out the glass shelf, pull out vegetable container.

# Light (LED)

Your appliance features a maintenance-free LED light.

These lights may be repaired by customer service or authorised technicians only.

# Tips for saving energy

- Install the appliance in a dry, well ventilated room! The appliance should not be installed in direct sunlight or near a heat source (e.g. radiator, cooker).

  If required, use an insulating plate.
- Allow warm food and drinks to cool down before placing in the appliance.
- Thaw frozen food in the refrigerator compartment and use the low temperature of the frozen food to cool refrigerated food.
- Open the appliance as briefly as possible.
- To achieve the lowest energy consumption, leave a small wall gap at the side.
- The arrangement of the fittings does not affect the energy rating of the appliance.

# Operating noises

## Quite normal noises

**Note**

When super freezing is switched on, increased operating noises may occur.

**Droning**
Motors are running (e.g. refrigerating units, fan).

**Bubbling, humming or gurgling noises**
Refrigerant is flowing through the tubing.

**Clicking**
Motor, switches or solenoid valves are switching on/off.

**Cracking**
Automatic defrosting is running.

## Preventing noises

**The appliance is not level**
Please align the appliance with a spirit level. Use the height-adjustable feet or place packing underneath them.

**The appliance is not free-standing**
Please move the appliance away from adjacent units or appliances.

**Containers or storage areas wobble or stick**
Please check the removable parts and re-insert them correctly if required.

**Bottles or receptacles are touching each other**
Move the bottles or receptacles slightly away from each other.

# Eliminating minor faults yourself

Before you call customer service:

Please check whether you can eliminate the fault yourself based on the following information.

Customer service will charge you for advice – even if the appliance is still under guarantee!

| Fault | Possible cause | Remedial action |
|---|---|---|
| Temperature differs greatly from the set value. | | In some cases it is adequate to switch off the appliance for 5 minutes.<br>If the temperature is too high wait a few hours and check whether the temperature has approached the set value.<br>If the temperature is too low check the temperature again the next day. |
| It is too cold in the refrigerator section or in the chill compartment. | | Increase the temperature in the refrigerator section. |
| | | Push temperature controller for the chill compartment downwards. Fig. 7 |
| The temperature in the freezer compartment is too warm. | Appliance opened frequently. | Do not open the appliance unnecessarily. |
| | The ventilation openings have been covered. | Remove obstacles. |
| | Large quantities of fresh food are being frozen. | Do not exceed max. freezing capacity. |
| Appliance is not cooling, temperature display and light are lit. | Showroom mode is switched on. | Press and hold °C button and + setting button for 5 seconds until an acknowledgement signal sounds. Another acknowledgement signal sounds when the buttons are released.<br>After a short time check whether your appliance is cooling. |
| The side panels of the appliance are warm. | Pipes run into the side panels which heat during the cooling process. | That is normal behaviour for the appliance and not a fault.<br>Furniture touching the appliance will not be damaged by the heat. |

| Fault | Possible cause | Remedial action |
|---|---|---|
| The light does not function. | The LED light is defective. | See chapter “Light (LED)” section. |
| | Appliance was open too long.<br>Light is switched off after approx. 10 min. | When the appliance is closed and opened, the light is on again. |
| Displays do not illuminate. | Power failure; the fuse has been switched off; the mains plug has not been inserted properly. | Connect mains plug. Check whether the power is on, check the fuses. |
| Freezer compartment door was open for a long time; temperature is no longer reached. | The evaporator (refrigeration generator) in the NoFrost system is covered in thick ice and can no longer be defrosted fully automatically. | To defrost the evaporator, remove the frozen food with the compartments, insulate well and store in a cool location.<br>Switch off the appliance and move it away from the wall. Leave the appliance door open.<br>After approx. 20 min. the condensation begins to run into the evaporation pan, at the rear of the appliance.<br>To prevent the evaporation pan from overflowing in this case, mop up the condensation with a sponge.<br>The evaporator is defrosted when the water stops running into the evaporation pan. Clean the interior. Switch the appliance back on again. |
| Condensation accumulates on the surface of the appliance and on the shelves inside. | The effect is reinforced if ambient temperatures are warm and humid. | Wipe away the water with a soft, dry cloth.<br>■ Open the appliance as briefly as possible<br>■ Make sure that the appliance is always closed properly. |

# Appliance self-test

Your appliance features an automatic self-test program which shows you sources of faults which may be repaired by customer service only.

## Starting the appliance self-test

1. Switch off the appliance and wait 5 minutes.
2. Switch on the appliance and within the first 10 seconds, press and hold the °C button and the "–" setting button for 3–5 seconds until an audible signal sounds.

   The self-test programme starts.

When the self-test ends and an audible signal sounds twice, your appliance is in working order.

If 5 audible signals sound, there is an error. Inform customer service.

## Ending the appliance self-test

When the programme has ended, the appliance switches over to normal operation.

# Customer service

Your local customer service can be found in the telephone directory or in the customer-service index. Please provide customer service with the appliance product number (E-Nr.) and production number (FD-Nr.).

This information can be found on the rating plate. Fig. 14

To prevent unnecessary call-outs, please assist customer service by quoting the product and production numbers. This will save you additional costs.

## Repair order and advice on faults

Contact information for all countries can be found on the enclosed customer service list.

| | | |
|---|---|---|
| GB | 0344 892 8979 | Calls charged at local or mobile rate. |
| IE | 01450 2655 | 0.03 € per minute at peak. Off peak 0.0088 € per minute. |
| US | 800 944 2904 | toll-free |




1

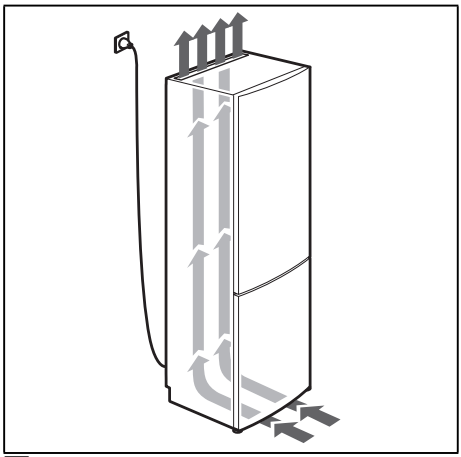

2

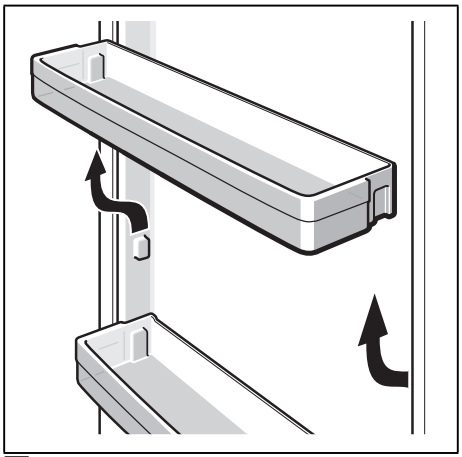

3

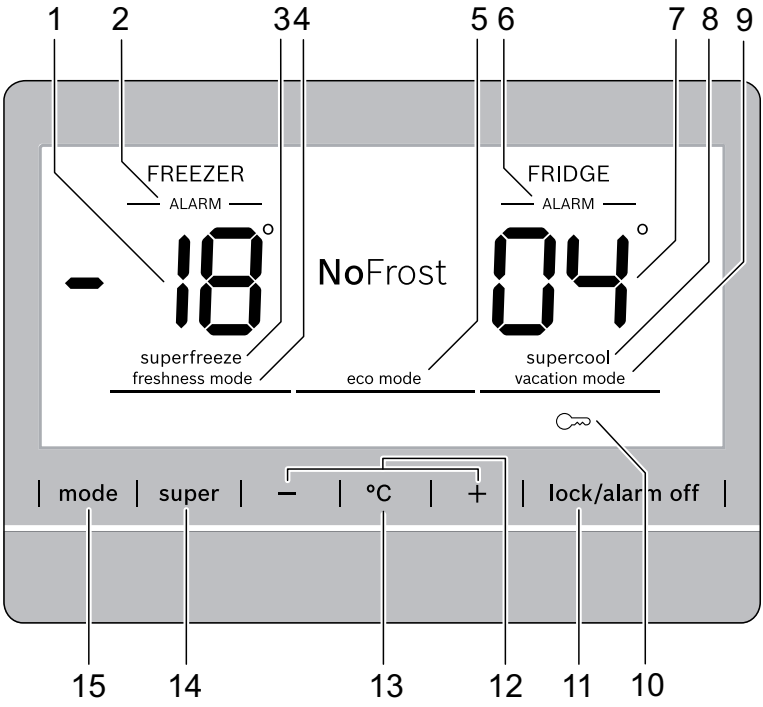
1
2
3
4
5
6
7
8
9
FREEZER
ALARM
- 18°
NoFrost
FRIDGE
ALARM
04°
superfreeze
freshness mode
eco mode
supercool
vacation mode
mode
super
–
°C
+
lock/alarm off
15
14
13
12
11
10

4

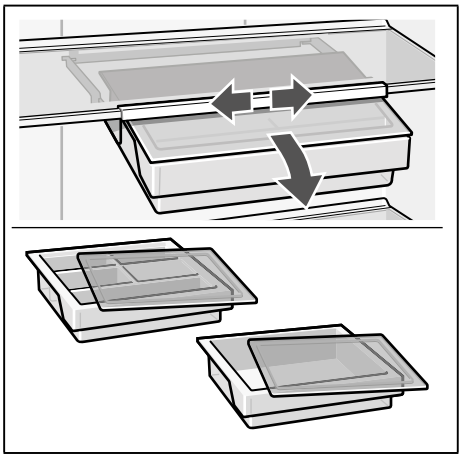

5

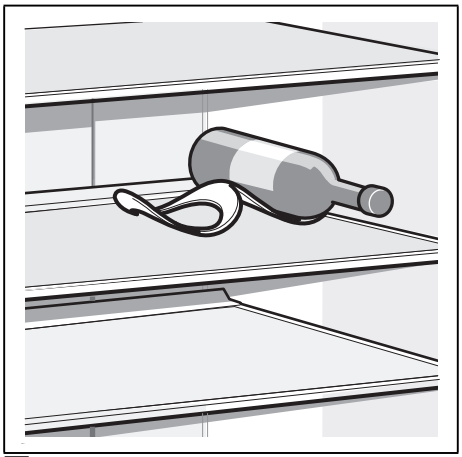

6

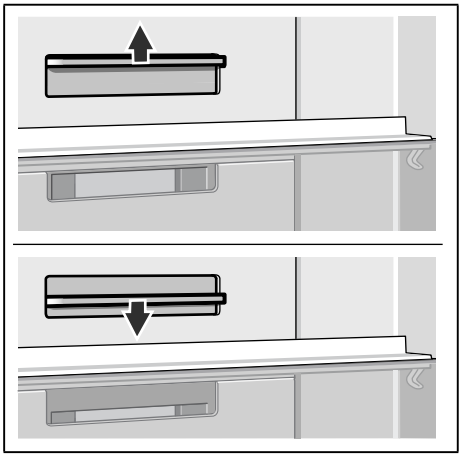

7

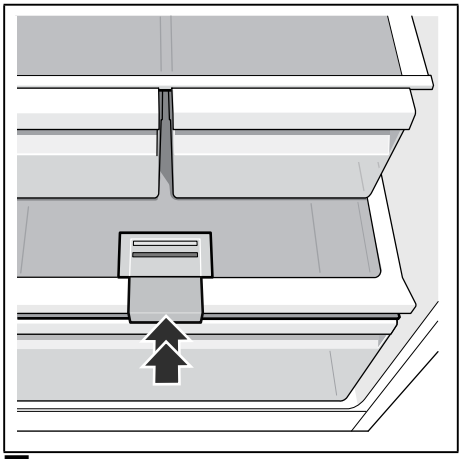

8

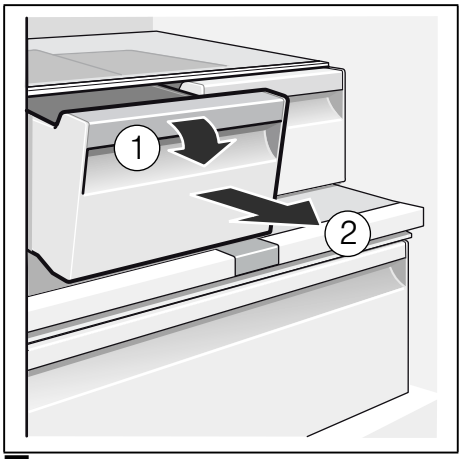


9

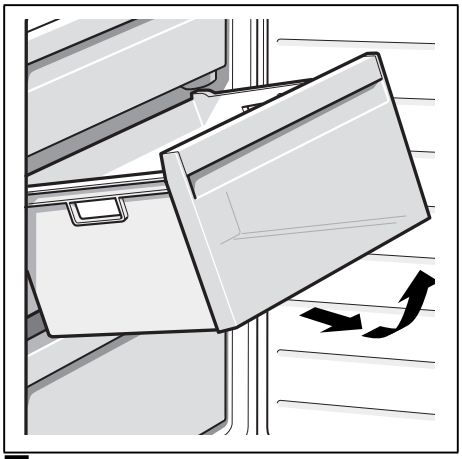

10

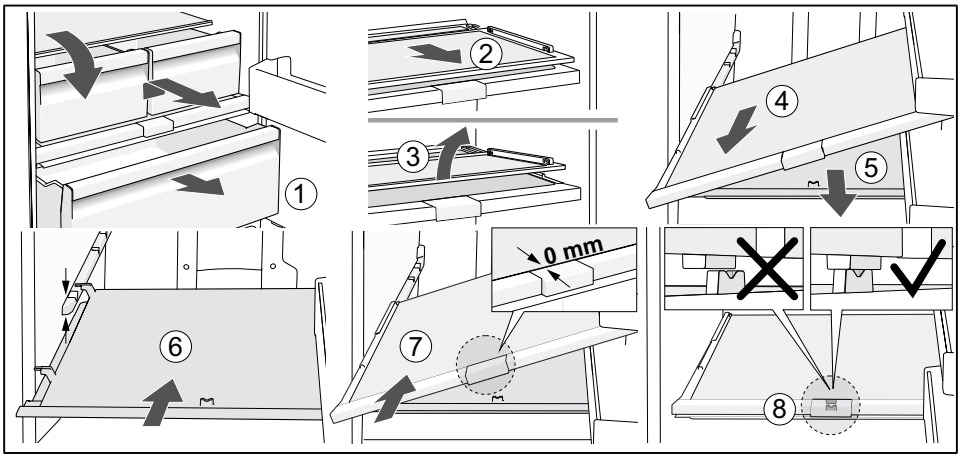


11




12

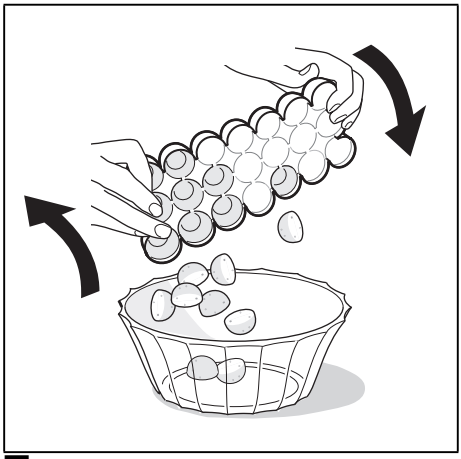

13

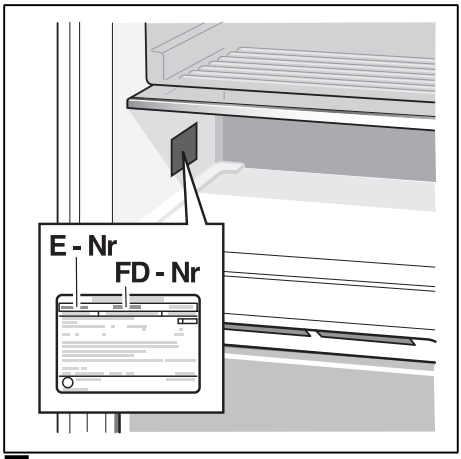


14




# Thank you for buying a Bosch Home Appliance!

Register your new device on MyBosch now and profit directly from:

- **Expert tips & tricks for your appliance**
- **Warranty extension options**
- **Discounts for accessories & spare-parts**
- **Digital manual and all appliance data at hand**
- **Easy access to Bosch Home Appliances Service**

Free and easy registration – also on mobile phones:
**www.bosch-home.com/welcome**




# Looking for help? You´ll find it here.

Expert advice for your Bosch home appliances, need help with problems or a repair from Bosch experts.
Find out everything about the many ways Bosch can support you:
**www.bosch-home.com/service**
**Contact data of all countries are listed in the attachted service directory.**

**Bosch Home Appliance Group**
P.O. Box 83 01 01
D-81701 Munich
Germany
**www.bosch-home.com**

**9001101173** (9904)
en