GRUNDIG

Refrigerator

User Manual

Frigider

Manual de instrucțiuni

Ψυγείο

Εγχειρίδιο Χρήστη

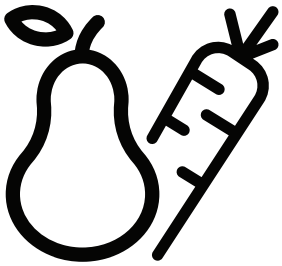

GKN 27930 HFXR - GKN27960HFXRN

EN / RO / EL /

CE

58 2947 0000/AH

Contents

1. Safety and environment instructions 3
1.1. General safety 3
1.2. Intended use 5
1.3. Child safety 6
1.4. Compliance with WEEE Directive and Disposing of the Waste Product 6
1.5. Compliance with RoHS Directive 6
1.6. Package information 6
1.7. Technical information for Wifi + Bluetooth 6

2. Your Refrigerator 7

3 Installation 8
3.1 Appropriate installation location 8
3.2 Installing the plastic wedges . 9
3.3 Adjusting the feet 9
3.4 Electrical connection 9

4 Preparation 10
4.1 Things to be done for energy saving 10
4.2 Initial use 11

5. Operating the product 12
5.1 Ice bucket 15
(This feature is optional) 15
5.2 Egg holder 15
5.3 Fan 15
5.4 Vegetable bin 15
(This feature is optional) 15
5.5 Zero degree compartment ... 15
(This feature is optional) 15
5.6 Using the second crisper of the product 16
5.7 Moving door rack 17
5.8 Sliding storage box 17
(This feature is optional) 17
5.9 Moisture controlled vegetable bin 17
(This feature is optional) 17
5.10 Automatic ice machine ... 18
(This feature is optional) 18
5.11 Icematic and ice storage container 19
5.12 Using the water dispenser . 19
5.13 Filling the water dispenser's tank 20
5.14 Cleaning the water tank ... 20
5.15 Drip tray 21
5.16 HerbBox/HerbFresh 22
5.17 Deodoriser Module 22
5.18 Freezing fresh food 23
5.19 Recommendations for preserving the frozen food 24
5.20 Deep-freeze information 24
5.21 Placing the food 25
5.22 Door open warning 25
5.23 Illumination lamp 25

6. Maintenance and cleaning 26
6.1 Avoiding bad odours 26
6.2 Protecting the plastic surfaces 27
6.3 Door Glasses 27

7. Troubleshooting 28

Please read this manual first!

Dear Customer,

We hope that your product, which has been produced in modern plants and checked under the most meticulous quality control procedures, will provide you an effective service

For this, we recommend you to carefully read the entire manual of your product before using it and keep it at hand for future references.

The user manual will help you use the product in a fast and safe way.

Will help you use your appliance in a fast and safe way.

Read the manual before installing and operating your product.

Follow the instructions, especially those for safety.

Keep the manual in an easily accessible place as you may need it later.

Besides, read also the other documents provided with your product.

Please note that this manual may be valid for other models as well.

Symbols and their descriptions

This instruction manual contains the following symbols:

	Important information or useful usage tips.
	Warning against dangerous conditions for life and property.
	Warning against electric voltage.
	Packaging materials of the product are manufactured from recyclable materials in accordance with our National Environment Regulations.

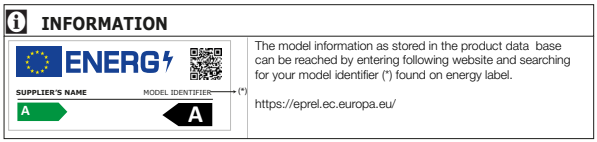

1. Safety and environment instructions

This section provides the safety instructions necessary to prevent the risk of injury and material damage. Failure to observe these instructions will invalidate all types of product warranty.

Intended use

	**WARNING:** Keep ventilation openings, in the appliance enclosure or in the built-instructure, clear of obstruction.
	**WARNING:** Do not use mechanical devices or other means to accelerate the defrosting process, other than those recommended by the manufacturer.
	**WARNING:** Do not damage the refrigerant circuit.
	**WARNING:** Do not use electrical appliances inside the food storage compartments of the appliance, unless they are of the type recommended by the manufacturer.

This appliance is intended to be used in household and similar applications such as

– staff kitchen areas in shops, offices and other working environments;

– farm houses and by clients in hotels, motels and other residential type environments;

– bed and breakfast type environments;

– catering and similar non-retail applications.

1.1. General safety

- This product should not be used by persons with physical, sensory and mental disabilities, without sufficient knowledge and experience or by children. The device can only be used by such persons under supervision and instruction of a person responsible for their safety. Children should not be allowed to play with this device.
- In case of malfunction, unplug the device.
- After unplugging, wait at least 5 minutes before plugging in again.
- Unplug the product when not in use.
- Do not touch the plug with wet hands! Do not pull the cable to plug off, always hold the plug.
- Do not plug in the refrigerator if the socket is loose.
- Unplug the product during installation, maintenance, cleaning and repair.
- If the product will not be used for a while, unplug the product and remove any food inside.
- Do not use the product when the compartment with circuit cards located on the upper back part of the product (electrical card box cover) (1) is open.

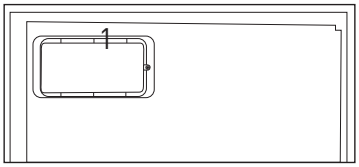

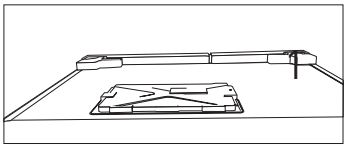

- Do not use steam or steamed cleaning materials for cleaning the refrigerator and melting the ice inside. Steam may contact the electrified areas and cause short circuit or electric shock!
- Do not wash the product by spraying or pouring water on it! Danger of electric shock!
- In case of malfunction, do not use the product, as it may cause electric shock. Contact the authorised service before doing anything.
- Plug the product into an earthed socket. Earthing must be done by a qualified electrician.
- If the product has LED type lighting, contact the authorised service for replacing or in case of any problem.
- Do not touch frozen food with wet hands! It may adhere to your hands!
- Do not place liquids in bottles and cans into the freezer compartment. They may explode.
- Place liquids in upright position after tightly closing the lid.
- Do not spray flammable substances near the product, as it may burn or explode.
- Do not keep flammable materials and products with flammable gas (sprays, etc.) in the refrigerator.
- Do not place containers holding liquids on top of the product. Splashing water on an electrified part may cause electric shock and risk of fire.
- Exposing the product to rain, snow, sunlight and wind will cause electrical danger. When relocating the product, do not pull by holding the door handle. The handle may come off.
- Take care to avoid trapping any part of your hands or body in any of the moving parts inside the product.
- Do not step or lean on the door, drawers and similar parts of the refrigerator. This will cause the product to fall down and cause damage to the parts.
- Take care not to trap the power cable.

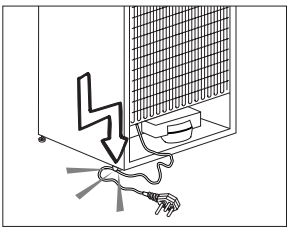

- When positioning the appliance, ensure the supply cord is not trapped or damaged.
- Do not locate multiple portable socket-outlets or portable power supplies at the rear of the appliance.

1.1.1 HC warning

If the product comprises a cooling system using R600a gas, take care to avoid damaging the cooling system and its pipe while using and moving the product. This gas is flammable. If the cooling system is damaged, keep the product away from sources of fire and ventilate the room immediately.



The label on the inner left side indicates the type of gas used in the product.

1.1.2 For models with water dispenser

- Pressure for cold water inlet shall be maximum 90 psi (620 kPa). If your water pressure exceeds 80 psi (550 kPa), use a pressure limiting valve in your mains system. If you do not know how to check your water pressure, ask for the help of a professional plumber.
- If there is risk of water hammer effect in your installation, always use a water hammer prevention equipment in your installation. Consult Professional plumbers if you are not sure that there is no water hammer effect in your installation.
- Do not install on the hot water inlet. Take precautions against of the risk of freezing of the hoses. Water temperature operating interval shall be 33°F (0.6°C) minimum and 100°F (38°C) maximum.
- Use drinking water only.

1.2. Intended use

- This product is designed for home use. It is not intended for commercial use.
- The product should be used to store food and beverages only.
- Do not keep sensitive products requiring controlled temperatures (vaccines, heat sensitive medication, medical supplies, etc.) in the refrigerator.
- The manufacturer assumes no responsibility for any damage due to misuse or mishandling.
- Original spare parts will be provided for 10 years, following the product purchasing date.

1.3. Child safety

- Keep packaging materials out of children's reach.
- Do not allow the children to play with the product.
- If the product's door comprises a lock, keep the key out of children's reach.

1.4. Compliance with WEEE Directive and Disposing of the Waste Product

This product complies with EU WEEE Directive (2012/19/EU). This product bears a classification symbol for waste electrical and electronic equipment (WEEE).

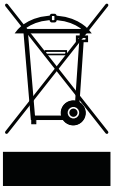

This product has been manufactured with high quality parts and materials which can be reused and are suitable for recycling. Do not dispose of the waste product with normal domestic and other wastes at the end of its service life. Take it to the collection center for the recycling of electrical and electronic equipment. Please consult your local authorities to learn about these collection centers.

1.5. Compliance with RoHS Directive

- This product complies with EU WEEE Directive (2011/65/EU). It does not contain harmful and prohibited materials specified in the Directive.

1.6. Package information

Packaging materials of the product are manufactured from recyclable materials in accordance with our National Environment Regulations. Do not dispose of the packaging materials together with the domestic or other wastes. Take them to the packaging material collection points designated by the local authorities.

1.7. Technical information for Wifi + Bluetooth

Frequency Band:	2.4GHz (Wi-fi or bluetooth operational)
Max. Transmission Power:	< 100mW (Wi-fi or bluetooth operational)
Software information:	Quartz_WiFi. XXX

Conformity Decleration for CE:
Arçelik A.Ş. hereby declares that this appliance complies with Directive 2014/53/EU.
The complete text of the EU declaration of conformity is available in the following internet address:Products, From: support.grundıg.com
The defined cybersecurity-related software update support period of the product is the warranty period of the product. After this period, cybersecurity-related software updates are not guaranteed.

2. Your Refrigerator

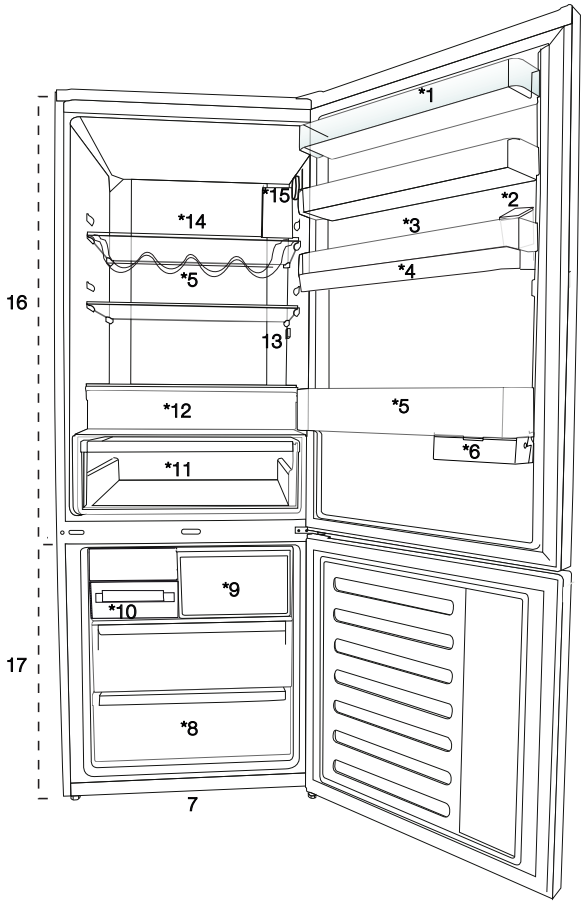

1. Cooler compartment door shelf
2. Water dispenser filling tank
3. Egg section
4. Water dispenser reservoir
5. Bottle shelf
6. Sliding storage containers
7. Adjustable legs
8. Deep freezer compartment
9. Quick freeze compartment
10. Ice cube tray & Ice bank
11. Vegetable bin
12. Zero degree compartment
13. Interior light
14. Cooler compartment glass shelf
15. Temperature adjustment button
16. Cooler compartment
17. Freezer compartment

*** optional:**Figures in this user manual are schematic and may not match the product exactly. If the subject parts are not included in the product you have purchased, then those parts are valid for other models.

3 Installation

3.1 Appropriate installation location

Contact an Authorized Service for the installation of the product. In order to prepare the product for use, refer the information in the user manual and ensure that electrical installation and water installation are appropriate. If not, call a qualified electrician and technician to have any necessary arrangements carried out.

	**WARNING:** Manufacturer shall not be held liable for damages that may arise from procedures carried out by unauthorized persons.
	**WARNING:** Product must not be plugged in during installation. Otherwise, there is the risk of death or serious injury!
	**WARNING:** If the door clearance of the room where the product shall be place is so tight to prevent passing of the product, remove the door of the room and pass the product through the door by turning it to its side; if this does not work, contact the authorized service.

- Place the product on an even floor surface to prevent jolts.
- Install the product at least 30 cm away from heat sources such as hobs, heater cores and stoves and at least 5 cm away from electrical ovens.
- Product must not be subjected to direct sun light and kept in humid places.
- Appropriate air ventilation must be provided around your product in order to achieve an efficient operation. If the product is to be placed in a recess in the wall, pay attention to leave at least 5 cm distance with the ceiling and side walls.
- Do not install the product in places where the temperature falls below -5°C.
- Your product requires adequate air circulation to function efficiently. If the product will be placed in an alcove, remember to leave at least 5 cm clearance between the product and the ceiling, rear wall and the side walls.
- If the product will be placed in an alcove, remember to leave at least 5 cm clearance between the product and the ceiling, rear wall and the side walls. Check if the rear wall clearance protection component is present at its location (if provided with the product). If the component is not available, or if it is lost or fallen, position the product so that at least 5 cm clearance shall be left between the rear surface of the product and the wall of the room. The clearance at the rear is important for efficient operation of the product.

3.2 Installing the plastic wedges

Plastic wedges supplied with the product are used to create the distance for the air circulation between the product and the rear wall.

1. To install the wedges, remove the screws on the product and use the screws supplied together with the wedges.
2. Insert the 2 plastic wedges onto the rear ventilation cover as illustrated in the figure.

3.3 Adjusting the feet

If the product stands unbalanced after installation, adjust the feet on the front by rotating them to the right or left.

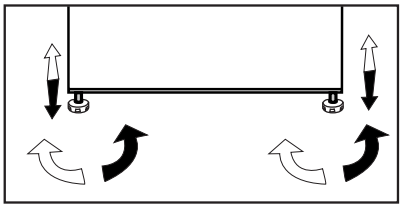

3.4 Electrical connection

	WARNING: Do not make connections via extension cables or multi-plugs.
	WARNING: Damaged power cable must be replaced by the Authorized Service Agent.
	If two coolers are to be installed side by side, there should be at least 4 cm distance between them.

- Our company shall not be liable for any damages that will arise when the product is used without grounding and electrical connection in accordance with the national regulations.
- Power cable plug must be within easy reach after installation.
- Do not extension cords or cordless multiple outlets between your product and the wall outlet.

	Hot Surface Warning! Side walls of your product is equipped with refrigerant pipes to improve the cooling system. Refrigerant with high temperatures may flow through these areas, resulting in hot surfaces on the side walls. This is normal and does not need any servicing. Please pay attention while touching these areas.

4 Preparation

4.1 Things to be done for energy saving

Connecting the product to electronic energy-saving systems is harmful, as it may damage the product.

- For a freestanding appliance; 'this refrigerating appliance is not intended to be used as a built-in appliance
- Do not keep the refrigerator doors open for long periods.
- Do not place hot food or beverages into the refrigerator.
- Do not overfill the refrigerator; blocking the internal air flow will reduce cooling capacity.
- In order to store the maximum amount of food into the cooler compartment of your refrigerator, you should take out the upper drawers and place it onto the glass rack. The declared energy consumption of your refrigerator was determined by taking out the cooler, ice tray and upper drawers in a way that will enable maximum storage. Using the below drawer when storing is strongly recommended. Energy saving function should be activated for best energy consumption.
- You should not block the airflow by putting food in front of the cooler fan. A space of minimum 3cm must be left in front of the protective fan wire when placing food.
- Depending on the product's features; defrosting frozen foods in the cooler compartment will ensure energy saving and preserve food quality.
- Food should be stored using the drawers in the cooler compartment in order to ensure energy saving and protect food in better conditions.
- Food packages should not be in direct contact with the heat sensor located in the cooler compartment. If they are in contact with the sensor, energy consumption of the appliance might increase.
- Make sure the foods are not in contact with the cooler

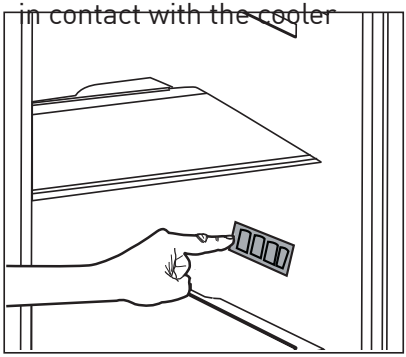

compartment temperature sensor described below.

4.2 Initial use

Before using your refrigerator, make sure the necessary preparations are made in line with the instructions in “Safety and environment instructions” and “Installation” sections.

- Keep the product running with no food inside for 6 and do not open the door, unless absolutely necessary.

A sound will be heard when the compressor is engaged. It is normal to hear sound even when the compressor is inactive, due to the compressed liquids and gasses in the cooling system.

Front edges of the product might heat up. This is normal. These areas are designed to warm up in order to prevent condensation.

In some models indicator panel turns off automatically 5 minutes after the door closes. It will be reactivated when the door is open or any button is pressed.

- Since hot and humid air will not directly penetrate into your product when the doors are not opened, your product will optimize itself in conditions sufficient to protect your food. Functions and components such as compressor, fan, heater, defrost, lighting, display and so on will operate according to the needs to consume minimum energy under these circumstances.

5. Operating the product

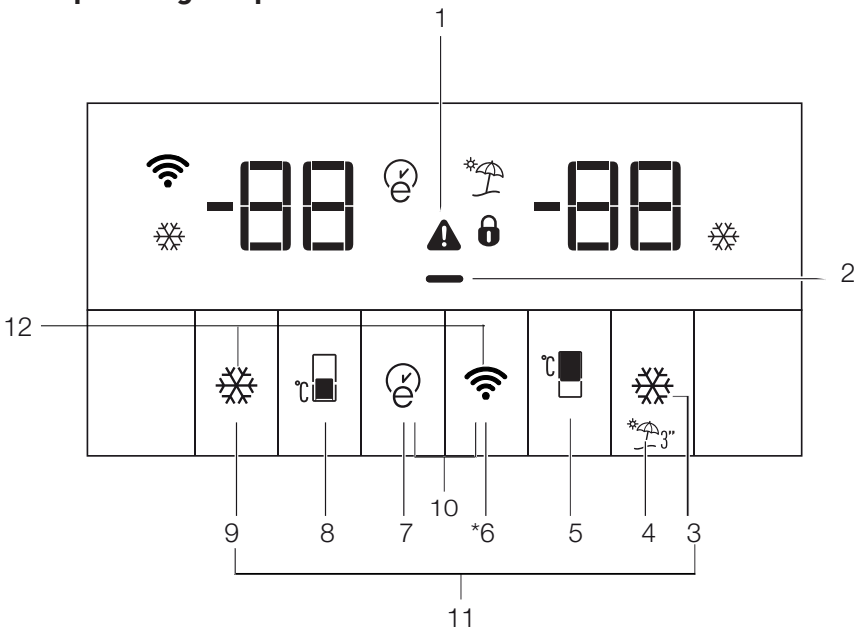

1. Error status indicator
2. Energy saving function (display off) indicator
3. Quick fridge key
4. Vacation function key
5. Fridge compartment temperature setting key
6. Wireless connection key
7. Eco-fuzzy key
8. Freezer compartment temperature setting key
9. Quick freeze button
10. Key lock
11. Key for changing temperature unit

May not be available in all models

Figures in this user manual are schematic and may not match the product exactly. If the subject parts are not included in the product you have purchased, then those parts are valid for other models.

1.Error status indicator

If your refrigerator does not cool adequately or if there is a sensor failure, this indicator (⚠) will be activated. When this indicator is active, Freezer Compartment Temperature indicator will display "E" and Fridge Compartment Temperature Indicator will display numbers such as "1,2,3...". These numbers on the indicator provide information about the error to the service personnel.

When you place hot food into the freezer compartment or if you leave the door open for a long time, exclamation mark can illuminate for some time. This is not a failure; this warning will disappear when the food cools down.

2. Energy saving function (display off) indicator

If the product doors are kept closed for a long time energy saving function is automatically activated and energy saving symbol is illuminated. (▬)

When energy saving function is activated, all symbols on the display other than energy saving symbol will turn off. When the energy saving function is activated, if any button is pressed or the door is opened, energy saving function will be canceled and the symbols on display will return to normal.Energy saving function is a factory default and cannot be cancelled.

3. Quick fridge key

Quick fridge indicator (❄) is lit and the fridge compartment temperature indicator value is displayed as 1 when the quick fridge function is activated. To cancel this function, press the Quick fridge button again. Quick fridge indicator will be off and the refrigerator will be reset to its normal settings. Quick fridge function is cancelled automatically in 1 hour if you do not cancel it. If you want to cool large amounts of fresh food, press the Quick fridge button before putting the food into the fridge compartment.

4. Vacation function key

In order to activate vacation function, press and hold the button (🧳) for 3 seconds and the vacation mode indicator (⛱) will be activated. When the vacation function is activated, "- -" is displayed on the fridge compartment temperature indicator and no active cooling is performed in the fridge compartment. It is not suitable to keep the food in the fridge compartment when this function is activated. Other compartments will continue to be cooled according to their set temperatures.

To cancel this function, press **vacation function** button again.

5. Fridge compartment temperature setting button

When this button is pressed the fridge compartment temperature can be set to 8,7,6,5,4,3,2 and 1 values. (🌡)

6.Wireless connection (*optional) key

Press and hold the button for 3 seconds to start the product's first connection to home network.

When the connection is being established, the wireless connection icon (📶) will flash.

If the connection to the home network is successful, the wireless network icon will become steadily on.

After establishing the first connection, short press this button to activate/deactivate the connection. The wireless connection icon will flash until the connection is established. Once connection is enabled, the wireless network icon will become steadily on. If connection cannot be established for a certain amount of time, check your connection settings and refer to the troubleshooting section. The HomeWhiz app is used as the connection interface. Connection steps are available in the HomeWhiz app (in HomeWhiz section).

7. Eco-fuzzy key

Press the eco-fuzzy button to enable the eco fuzzy function. When this function is enabled, the freezer will start to run in eco mode after at least 6 hours and the economical use indicator will be on.( ) To disable the eco-fuzzy function, press the eco-fuzzy function button again. When the eco-fuzzy function is enabled, this indicator will tun on after 6 hours.

8. Freezer button temperature setting key

Temperature setting is made for freezer compartment.

When the button numbered ( ) is pressed, you can set the temperature of the freezer compartment to -18, -19, -20, -21, -22, -23 and -24.

9. Quick freeze button

Press button no. (9) for quick freeze; the quick freeze indicator ( ) will be activated.

When the quick freeze function is on, the quick freeze indicator is lit and the freezer compartment temperature indicator displays -27. To cancel this function press the quick freeze button ( ) again. The quick freeze indicator will turn off and the refrigerator will return to its normal settings. Quick freeze function is cancelled automatically in 24 hours if you do not cancel it. If you want to freeze large amounts of fresh food, press the quick freeze button before putting the food into the freezer compartment.

10. Key lock

Press and hold the wireless network ( ) and eco-fuzzy ( ) buttons simultaneously for 3 seconds. Key lock symbol ( ) will light up and key lock mode will be activated. Buttons will not function when the key lock mode is active. Press and hold the wireless network ( ) and eco-fuzzy ( ) buttons simultaneously for 3 seconds. Key lock will be deactivated.

Use the **key lock** function if you want to prevent changing of the temperature setting of the refrigerator.

11.Key for changing temperature unit

Press and hold the Quick Fridge ( ) And Quick Freeze ( ) keys for 3 seconds to switch between Fahrenheit and Celcius.

5.1 Ice bucket

(This feature is optional)

- Take the ice bucket from the freezer compartment.
- Fill the ice bucket with water.
- Place the ice bucket into the freezer compartment.
- The ice will be ready after approximately two hours. Take the ice bucket from the freezer compartment and bend in sightly over the holder that you are going to serve. Ice will easily pour into the serving holder.

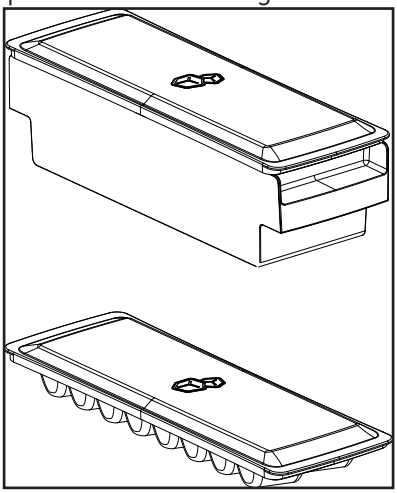

5.2 Egg holder

You can put the eggholder on the door or body rack of your choice. If you decide to put it on the body rack, it is recommended to prefer the shelves below as they are colder.

Do not put the eggholder into the freezer compartment.

5.3 Fan

Fan was designed to distribute circulate the cold air inside your refrigerator homogeneously. Operating time of the fan might vary depending the features of your product.

While in some products fan only operates with compressor, in others control system determines the operating time based on the need for cooling.

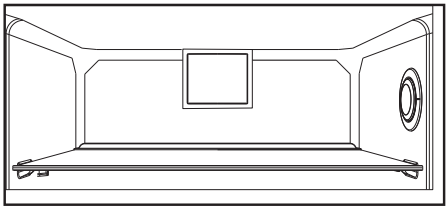

5.4 Vegetable bin

(This feature is optional)

- Product's vegetable bin is designed to keep vegetables fresh by preserving humidity. For this purpose, the overall cold air circulation is intensified in the vegetable bin.

5.5 Zero degree compartment

(This feature is optional)

Use this compartment to keep delicatessen at lower temperatures or meat products for immediate consumption.
Zero degree compartment is the coolest place where foods such as dairy products, meat, fish and chicken can be stored in ideal storage conditions. Vegetables and/or fruits should not be stored in this compartment.

5.6 Using the second crisper of the product



Figure 1.

As shown in the figure, there are 2 stoppers in the second crisper of K70560 model product.



Figure 2.

The second crisper looks like Figure 2 when closed.



Figure 3.

With the door is open 90°, pull the second crisper up to the first stopper as shown in Figure 3.

In the case that the drawer is more open, first of all, open the door by at least 135° degrees. After that, as shown in Figure 4, lift the second crisper for about 5 mm so that it is freed from the first stopper.



Figure 4.

After lifting, pull the second drawer up to the second stopper as shown in



Figure 5.

5.7 Moving door rack

(This feature is optional)

Moving door rack can be fixed in 3 different positions.

In order to move the rack, push the buttons on the side evenly. Rack will be movable.

Move the rack up or down.

When the rack is in the position that you want, release the buttons. Rack will be fixed again in the position where you have released the buttons.

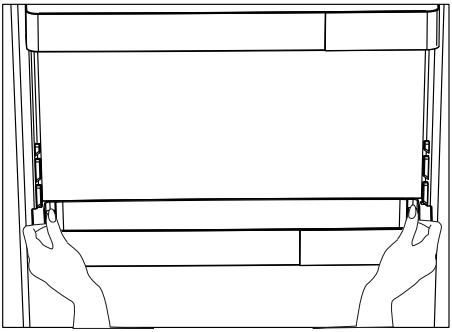

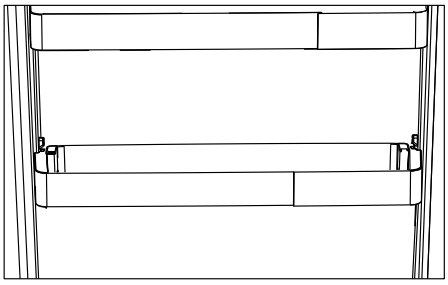

5.8 Sliding storage box

(This feature is optional)

This accessory has been designed to increase the usage volume of the door racks.

Thanks to its ability to move sideways, it enables you to easily place long bottle, jar or boxes that you put in the bottle rack below.

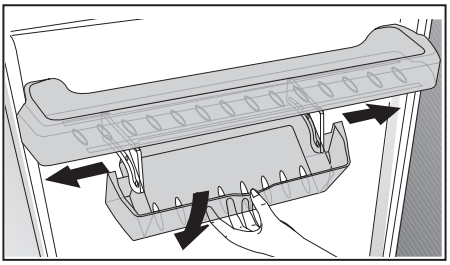

5.9 Moisture controlled vegetable bin

(This feature is optional)

With moisture control feature, moisture rates of vegetables and fruits are kept under control and ensures a longer freshness period for foods.

It is recommended to store leafed vegetables such as lettuce and spinach and similar vegetables prone to moisture loss not on their roots but in horizontal position into the vegetable bin as much as possible.

When placing the vegetables, place heavy and hard vegetables at the bottom and light and soft ones on the top, taking into account the specific weights of vegetables.

Do not leave vegetables in the vegetable bin in plastic bags.

Leaving them in plastic bags causes vegetables to rot in a short time. In situations where contact with other vegetables is not preferred, use packaging materials such as paper that has a certain porosity in terms of hygiene.

Do not put fruits that have a high ethylene gas production such as pear, apricot, peach and particularly apple in the same vegetable bin with other vegetables and fruits. The ethylene gas coming out of these fruits might cause other vegetables and fruits to mature faster and rot in a shorter period of time.

5.10 Automatic ice machine

(This feature is optional)

Automatic ice machine enables you to easily make ice in your refrigerator. In order to obtain ice from the ice machine, take out the water tank in the cooler compartment, fill it with water and fix it back.

First ice will be ready in about 2 hours in the ice machine drawer in the cooler compartment.

After placing the full water tank, you can obtain about 60-70 cubes of ice until it is fully empty.

If the water in the tank has waited for 2-3 weeks, it should be changed.

In products with automatic ice machine, you might hear a sound when pouring the ice. This sound is normal and is not a sign of failure.

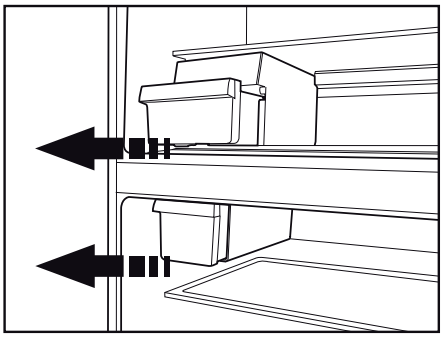

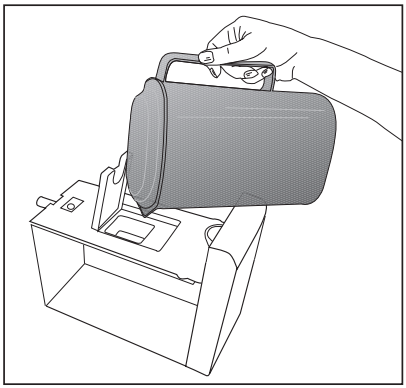

5.11 Icematic and ice storage container

***optional**

Using the Icematic

Fill the Icematic with water and place it into its seat. Your ice will be ready approximately in two hours. Do not remove the Icematic from its seating to take ice.

Turn the knobs on the ice reservoirs clockwise by 90 degrees.

Ice cubes in the reservoirs will fall down into the ice storage container below.

You may take out the ice storage container and serve the ice cubes.

If you wish, you may keep the ice cubes in the ice storage container.

Ice storage container

Ice storage container is only intended for accumulating the ice cubes. Do not put water in it. Otherwise, it will break.

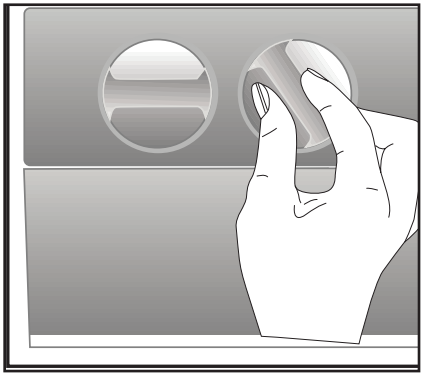

5.12 Using the water dispenser

***optional**

	It is normal for the first few glasses of water taken from the dispenser to be warm.
	If the water dispenser is not used for a long period of time, dispose of first few glasses of water to obtain fresh water.

1. Push in the lever of the water dispenser with your glass. If you are using a soft plastic cup, pushing the lever with your hand will be easier.
2. After filling the cup up to the level you want, release the lever.

	Please note, how much water flows from the dispenser depends on how far you depress the lever. As the level of water in your cup / glass rises, gently reduce the amount of pressure on the lever to avoid overflow. If you slightly press the arm, the water will drip; this is quite normal and not a failure.

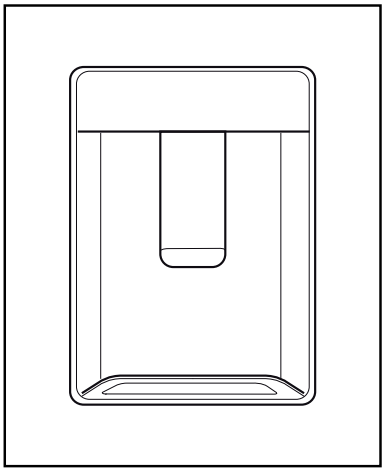

5.13 Filling the water dispenser's tank

Water tank filling reservoir is located inside the door rack.

1. Open the cover of the tank.
2. Fill the tank with fresh drinking water.
3. Close the cover.

Do not fill the water tank with any other liquid except for water such as fruit juices, carbonated beverages or alcoholic drinks which are not suitable to use in the water dispenser. Water dispenser will be irreparably damaged if these kinds of liquids are used. Warranty does not cover such usages. Some chemical substances and additives contained in these kinds of drinks/liquids may damage the water tank.

Use clean drinking water only.

Capacity of the water tank is 3 litres; do not overfill.

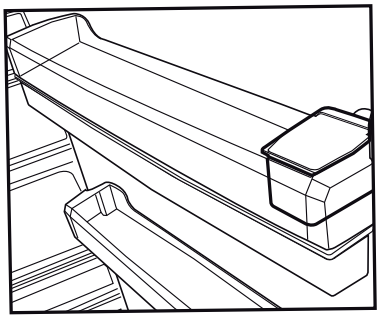

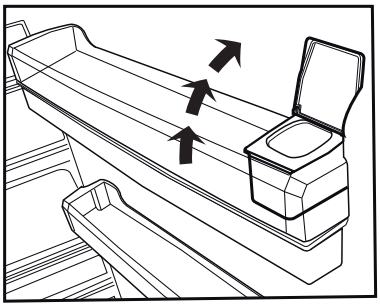

5.14 Cleaning the water tank

1. Remove the water filling reservoir inside the door rack.
2. Remove the door rack by holding from both sides.
3. Grab the water tank from both sides and remove it with an angle of 45°C.

4. Remove the cover of the water tank and clean the tank.

Components of the water tank and water dispenser should not be washed in dishwasher.

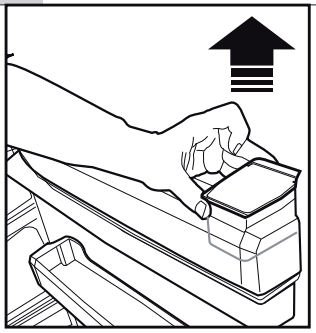

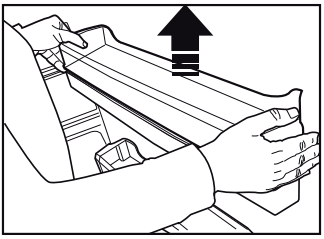

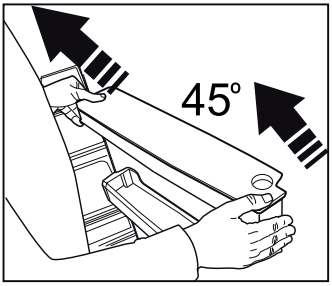

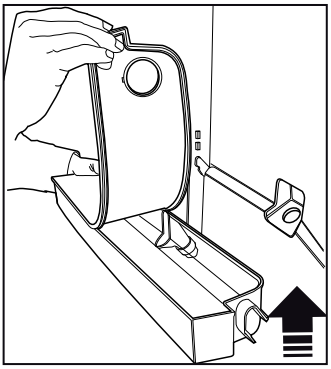

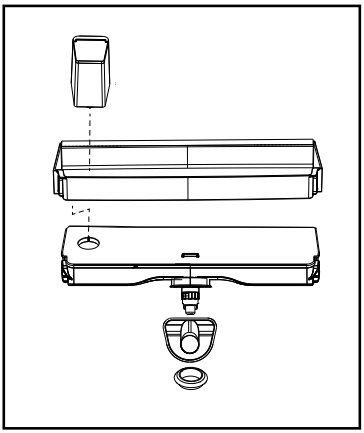

5.15 Drip tray

Water that dripped while using the water dispenser accumulates in the spillage tray.

Remove the plastic filter as shown in the figure.

With a clean and dry cloth, remove the water that has accumulated.

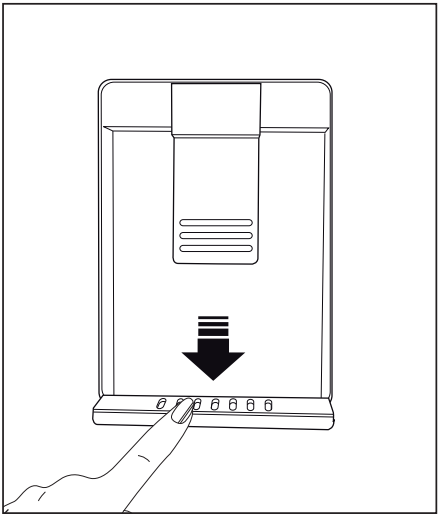

5.16 HerbBox/HerbFresh

Remove the film container from HerbBox/HerbFresh+

Take the film out of the bag and put it into the film container as shown in the image.

Seal the container again and replace it into HerbBox/HerbFresh+ unit.

HerbBox-HerbFresh+ sections are especially ideal for storage of various herbs that are supposed to be kept in delicate conditions. You can store your unbagged herbs (parsley, dill, etc.) in this section horizontally and keep them fresh for a much longer period.

The film shall be replaced in every six months.

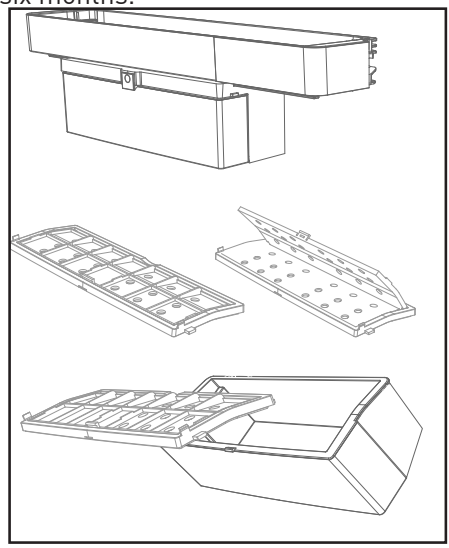

5.17 Deodoriser Module

(OdourFresh +)
(This feature is optional)

The deodoriser module quickly eliminates the bad smells in your refrigerator before they permeate the surfaces. Thanks to this module, which is placed on the ceiling of the fresh food compartment, the bad odours dissolve while the air is actively being passed on the odour filter, then the air that has been cleaned by the filter is re-emitted to the fresh food compartment. This way, the unwanted odours that may emerge during the storage of foods in the refrigerator are eliminated before they permeate the surfaces.

This is achieved thanks to the fan, LED and the odour filter integrated into the module. In daily use, the deodorising module will turn on automatically on a periodic basis. To maintain efficient performance, it is recommended to have the filter in the deodorising module by the authorised service provider every 5 years. Due to the fan integrated into the module, the noise you will hear during operation is normal. If you open the door of the fresh food compartment while the module is active, the fan will pause temporarily and resume where it has left off after some time the door is closed again. In case of power failure, the deodoriser module will resume where it has left off in the total operation duration once the power is back.

Info: It is recommended to store aromatic foods (such as cheese, olives and delicatessen foods) in their packaging and sealed to avoid bad odours that may result when smells of various foods get mixed. Besides, it is recommended to take spoiled foods out of the refrigerator quickly to prevent the other foods from getting spoiled and avoid bad odours.

5.18 Freezing fresh food

- In order to preserve the quality of the food, it shall be frozen as quickly as possible when it is placed in the freezer compartment, use the fast freezing feature for this purpose.
- You may store the food longer in freezer compartment when you freeze them while they are fresh.
- Pack the food to be frozen and close the packing so that it would not allow entrance of air.
- Ensure that you pack your food before putting them in the freezer. Use freezer containers, foils and moisture-proof papers, plastic bags and other packing materials instead of traditional packing papers.
- Label each pack of food by adding the date before freezing. You may distinguish the freshness of each food pack in this way when you open your freezer each time. Store the food frozen before in the front side of compartment to ensure that they are used first.



The freezer compartment defrosts automatically.

- Frozen food must be used immediately after they are thawed and they should not be re-frozen.
- Do not freeze too large quantities of food at one time.

Freezer Compartment Setting	Fridge compartment Setting	Remarks
-18°C	4°C	This is the normal recommended setting.
-20,-22 or -24°C	4°C	These settings are recommended when the ambient temperature exceeds 30°C.
Quick Freeze	4°C	Use when you wish to freeze your food in a short time. Your product will return to its previous mode when the process is over.
-18°C or colder	2°C	Use these settings if you think that your fridge compartment is not cold enough because of the hot ambient conditions or frequent opening and closing of the door.

5.19 Recommendations for preserving the frozen food

Compartment shall be set to -18°C at least.

1. Put packages in the freezer as quickly as possible after purchase without allowing the to thaw.
2. Check whether the "Use By" and "Best Before" dates on the packaging are expired or not before freezing it.
3. Ensure that the package of the food is not damaged.

5.20 Deep-freeze information

According to IEC 62552 standards, the product shall freeze at least 4.5 kg of food at 25°C ambient temperature to -18°C or lower within 24 hours for every 100-litres of freezer volume.
It is possible to preserve the food for a long time only at -18°C or lower temperatures.
You can keep the freshness of food for many months (at -18°C or lower temperatures in the deep freeze).

Foods to be frozen should not be allowed to come in contact with the previously frozen items to prevent them from getting thawed partially. Boil the vegetables and drain their water in order to store vegetables for a longer time as frozen. After draining their water, put them in air-proof packages and place them inside the freezer. Food such as bananas, tomatoes, lettuce, celery, boiled eggs, potatoes are not suitable for freezing. When these foods are frozen, only their nutritional value and taste shall be affected negatively. They shall not be spoiled so that they would create a risk for human health.

5.21 Placing the food

Freezer compartment shelves	Various frozen food such as meat, fish, ice cream, vegetables and etc.
Refrigerator compartment shelves	Food in pans, covered plates and closed containers, eggs (in closed container)
Door shelves of fridge compartment	Small and packaged food or beverage
Crisper	Vegetables and fruits
Fresh zone compartment	Delicatessen (breakfast food, meat products that shall be consumed in a short time)

5.22 Door open warning

(This feature is optional)

Door open warning is given to user both visually and acoustically. If the warning continues for 10 minutes, interior lights will be turned off.

5.23 Illumination lamp

LED lamps are used as illumination lamps. Contact authorized service in case of any problem with this type of light. The lamp(s) used in this appliance is not suitable for household room illumination. The intended purpose of this lamp is to assist the user to place foodstuffs in the refrigerator/ freezer in a safe and comfortable way.

6. Maintenance and cleaning

Service life of the product extends and frequently faced problems decrease if cleaned at regular intervals.



WARNING: Unplug the product before cleaning it.

- Never use gasoline, benzene or similar substances for cleaning purposes.
- Never use any sharp and abrasive tools, soap, household cleaners, detergent and wax polish for cleaning.
- Dissolve one teaspoon of carbonate in half litre of water. Soak a cloth with the solution and wrung it thoroughly. Wipe the interior of the refrigerator with this cloth and the dry thoroughly.
- Make sure that no water enters the lamp housing and other electrical items.
- If you will not use the refrigerator for a long period of time, unplug it, remove all food inside, clean it and leave the door ajar.
- Check regularly that the door gaskets are clean. If not, clean them.
- To remove door and body shelves, remove all of its contents.
- Remove the door shelves by pulling them up. After cleaning, slide them from top to bottom to install.
- Never use cleaning agents or water that contain chlorine to clean the outer surfaces and chromium coated parts of the product. Chlorine causes corrosion on such metal surfaces
- Do not use sharp, abrasive tools, soap, household cleaning agents, detergents, kerosene, fuel oil, varnish etc. to prevent removal and deformation of the prints on the plastic part. Use lukewarm water and a soft cloth for cleaning and then wipe it dry.

6.1 Avoiding bad odours

Materials that may cause odour are not used in the production of our refrigerators. However, due to inappropriate food preserving conditions and not cleaning the inner surface of the refrigerator as required can bring forth the problem of odour. Pay attention to following to avoid this problem:

- Keeping the refrigerator clean is important. Food residuals, stains, etc. can cause odour. Therefore, clean the refrigerator with carbonate dissolved in water every 15 days.Never use detergents or soap.
- Keep the food in closed containers.Microorganisms spreading out from uncovered containers can cause unpleasant odours.
- Never keep the food that have expired best before dates and spoiled in the refrigerator.

6.2 Protecting the plastic surfaces

Do not put liquid oils or oil-cooked meals in your refrigerator in unsealed containers as they damage the plastic surfaces of the refrigerator. If oil is spilled or smeared onto the plastic surfaces, clean and rinse the relevant part of the surface at once with warm water.

6.3 Door Glasses

Remove the protective foil on the glasses.

There is a coating on the surface of the glasses.This coating minimizes the stain build-up and helps to remove the possible stains and dirt easily.Glasses that are not protected with such a coating may be subject to persistent binding of air or water based organic or inorganic dirt such as limescale, mineral salts, unburned hydrocarbons, metal oxides and silicones that can easily and quickly cause stains or material damage. Keeping the glass clean becomes too difficult despite the regular cleaning. Consequently, the appearance and the transparency of the glass deteriorates. Harsh and corrosive cleaning methods and compounds will intensify these defects and speed up the deterioration process.

Water-based cleaning products that are not alkaline and corrosive must be used for regular cleaning purposes.

Non-alkaline and non-corrosive materials must be used for cleaning so that the service life of this coating lasts for a long time.

These glasses are tempered to increase their durability against impacts and breaking.

A safety film is also applied to their rear surfaces as an extra safety measure in order to prevent them from causing damage to their surrounding in case of a breakage.

*Alkali is a base that forms hydroxide ions (OH^-) when it is dissolved in water.

Li (Lithium), Na (Sodium), K (Potassium) Rb (Rubidium), Cs (Cesium) and artificial and radioactive Fr (Fan-sium) metals are called ALKALI METALS.

7. Troubleshooting

Check this list before contacting the service. Doing so will save you time and money. This list includes frequent complaints that are not related to faulty workmanship or materials. Certain features mentioned herein may not apply to your product.

The refrigerator is not working.

- The power plug is not fully settled. >>> Plug it in to settle completely into the socket.
- The fuse connected to the socket powering the product or the main fuse is blown. >>> Check the fuses.

Condensation on the side wall of the cooler compartment (MULTI ZONE, COOL, CONTROL and FLEXI ZONE).

- The door is opened too frequently >>> Take care not to open the product's door too frequently.
- The environment is too humid. >>> Do not install the product in humid environments.
- Foods containing liquids are kept in unsealed holders. >>> Keep the foods containing liquids in sealed holders.
- The product's door is left open. >>> Do not keep the product's door open for long periods.
- The thermostat is set to too low temperature. >>> Set the thermostat to appropriate temperature.

Compressor is not working.

- In case of sudden power failure or pulling the power plug off and putting back on, the gas pressure in the product's cooling system is not balanced, which triggers the compressor thermic safeguard. The product will restart after approximately 6 minutes. If the product does not restart after this period, contact the service.
- Defrosting is active. >>> This is normal for a fully-automatic defrosting product. The defrosting is carried out periodically.
- The product is not plugged in. >>> Make sure the power cord is plugged in.
- The temperature setting is incorrect. >>> Select the appropriate temperature setting.
- The power is out. >>> The product will continue to operate normally once the power is restored.

The refrigerator's operating noise is increasing while in use.

- The product's operating performance may vary depending on the ambient temperature variations. This is normal and not a malfunction.

The refrigerator runs too often or for too long.

- The new product may be larger than the previous one. Larger products will run for longer periods.
- The room temperature may be high. >>> The product will normally run for long periods in higher room temperature.
- The product may have been recently plugged in or a new food item is placed inside. >>> The product will take longer to reach the set temperature when

recently plugged in or a new food item is placed inside. This is normal.
- Large quantities of hot food may have been recently placed into the product. >>> Do not place hot food into the product.
- The doors were opened frequently or kept open for long periods. >>> The warm air moving inside will cause the product to run longer. Do not open the doors too frequently.
- The freezer or cooler door may be ajar. >>> Check that the doors are fully closed.
- The product may be set to temperature too low. >>> Set the temperature to a higher degree and wait for the product to reach the adjusted temperature.
- The cooler or freezer door washer may be dirty, worn out, broken or not properly settled. >>> Clean or replace the washer. Damaged / torn door washer will cause the product to run for longer periods to preserve the current temperature.

The freezer temperature is very low, but the cooler temperature is adequate.
- The freezer compartment temperature is set to a very low degree. >>> Set the freezer compartment temperature to a higher degree and check again.

The cooler temperature is very low, but the freezer temperature is adequate.
- The cooler compartment temperature is set to a very low degree. >>> Set the freezer compartment temperature to a higher degree and check again.

The food items kept in cooler compartment drawers are frozen.
- The cooler compartment temperature is set to a very low degree. >>> Set the freezer compartment temperature to a higher degree and check again.

The temperature in the cooler or the freezer is too high.
- The cooler compartment temperature is set to a very high degree. >>> Temperature setting of the cooler compartment has an effect on the temperature in the freezer compartment. Wait until the temperature of relevant parts reach the sufficient level by changing the temperature of cooler or freezer compartments.
- The doors were opened frequently or kept open for long periods. >>> Do not open the doors too frequently.
- The door may be ajar. >>> Fully close the door.
- The product may have been recently plugged in or a new food item is placed inside. >>> This is normal. The product will take longer to reach the set temperature when recently plugged in or a new food item is placed inside.
- Large quantities of hot food may have been recently placed into the product. >>> Do not place hot food into the product.

Shaking or noise.
- The ground is not level or durable. >>> If the product is shaking when moved slowly, adjust the stands to balance the product. Also make sure the ground is sufficiently durable to bear the product.

- Any items placed on the product may cause noise. >>> Remove any items placed on the product.

The product is making noise of liquid flowing, spraying etc.

- The product's operating principles involve liquid and gas flows. >>> This is normal and not a malfunction.

There is sound of wind blowing coming from the product.

- The product uses a fan for the cooling process. This is normal and not a malfunction.

There is condensation on the product's internal walls.

- Hot or humid weather will increase icing and condensation. This is normal and not a malfunction.
- The doors were opened frequently or kept open for long periods. >>> Do not open the doors too frequently; if open, close the door.
- The door may be ajar. >>> Fully close the door.

There is condensation on the product's exterior or between the doors.

- The ambient weather may be humid, this is quite normal in humid weather. >>> The condensation will dissipate when the humidity is reduced.

The interior smells bad.

- The product is not cleaned regularly. >>> Clean the interior regularly using sponge, warm water and carbonated water.
- Certain holders and packaging materials may cause odour. >>> Use holders and packaging materials without free of odour.
- The foods were placed in unsealed holders. >>> Keep the foods in sealed holders. Micro-organisms may spread out of unsealed food items and cause malodour. Remove any expired or spoilt foods from the product.

The door is not closing.

- Food packages may be blocking the door. >>> Relocate any items blocking the doors.
- The product is not standing in full upright position on the ground. >>> Adjust the stands to balance the product.
- The ground is not level or durable. >>> Make sure the ground is level and sufficiently durable to bear the product.

The vegetable bin is jammed.

- The food items may be in contact with the upper section of the drawer. >>> Reorganize the food items in the drawer.

If The Surface Of The Product Is Hot.

- High temperatures may be observed between the two doors, on the side panels and at the rear grill while the product is operating. This is normal and does not require service maintenance!Be careful when touching these areas.

WARNING:

If the problem persists after following the instructions in this section, contact your vendor or an Authorised Service. Do not try to repair the product.

DISCLAIMER / WARNING
Some (simple) failures can be adequately handled by the end-user without any safety issue or unsafe use arising, provided that they are carried out within the limits and in accordance with the following instructions (see the “Self-Repair” section).

Therefore, unless otherwise authorized in the “Self-Repair” section below, repairs shall be addressed to registered professional repairers in order to avoid safety issues. A registered professional repairer is a professional repairer that has been granted access to the instructions and spare parts list of this product by the manufacturer according to the methods described in legislative acts pursuant to Directive 2009/125/EC.
However, only the service agent (i.e. authorized professional repairers) that you can reach through the phone number given in the user manual/ warranty card or through your authorized dealer may provide service under the guarantee terms. Therefore, please be advised that repairs by professional repairers (who are not authorized by Grundig) shall void the guarantee.

Self-Repair

Self-repair can be done by the end-user with regard to the following spare parts: door handles,door hinges, trays, baskets and door gaskets (an updated list is also available in support.grundig.com as of 1st March 2021).

Moreover, to ensure product safety and to prevent risk of serious injury, the mentioned self-repair shall be done following the instructions in the user manual for self-repair or which are available in support.grundig.com. For your safety, unplug the product before attempting any self-repair.

Repair and repair attempts by end-users for parts not included in such list and/ or not following the instructions in the user manuals for self-repair or which are available in support..com, might give raise to safety issues not attributable to Grundig, and will void the warranty of the product.

Therefore, it is highly recommended that end-users refrain from the attempt to carry out repairs falling outside the mentioned list of spare parts, contacting in such cases authorized professional repairers or registered professional repairers. On the contrary, such attempts by end-users may cause safety issues and damage the product and subsequently cause fire, flood, electrocution and serious personal injury to occur.

By way of example, but not limited to, the following repairs must be addressed to authorized professional repairers or registered professional repairers: compressor, cooling circuit, main board,inverter board, display board, etc.

The manufacturer/seller cannot be held liable in any case where end-users do not comply with the above.

The spare part availability of the refrigerator that you purchased is 10 years.
During this period, original spare parts will be available to operate the refrigerator properly
The minimum duration of guarantee of the refrigerator that you purchased is 24 months.
This product is equipped with a lighting source of the «G» energy class.
The lighting source in this product shall only be replaced by professional repairers.

1 Instrucțiuni privind siguranța și mediul 3
1.1. Siguranța generală 3
1.1.1 Avertisment HC 6
1.1.2 Pentru modelele cu dozator de apă 6
1.2. Domeniu de utilizare 6
1.3. Siguranța copiilor 7
1.4. Conformitatea cu Directiva DEEE și eliminarea deșeurilor 7
1.5. Conformitatea cu Directiva RoHS 7
1.6. Informațiile de pe ambalaj . 7
1.7. Informații tehnice pentru Wifi + Bluetooth 7
2. Frigider 8
3 Instalarea 9
3.1 Locul corect pentru montare . 9
3.2 Fixarea penelor de fixare din plastic 10
3.3 Reglarea picioarelor 10
3.4 Conexiunea electric 10
4. Pregătirea 11
4.1 Modalități de reducere a consumului de energie electrică 11
4.2 Prima utilizare 11
5. Operarea produsului 13
5.1Recipientul pentru gheață 16
5.2 Raft de ușă mobil 17
5.3 Cutii de stocare glisante 17
5.4 Folosirea celui de-al doilea compartiment pentru legume al produsului; 18
5.5 Recipientul pentru gheață 19
5.6 Suport de ouă 19
5.7 Ventilator 19
5.8 Compartiment de legume 19
5.9 Compartiment de zero grade 19
5.10 Controlul umidității în compartimentul de legume 20
5.11 Aparat automat de gheață . 20
5.12 Aparatul Icematic și recipientul de depozitare a gheții 21
5.13 Dozatorul de apă 21
5.14 Utilizarea dozatorului de apă 21
5.15 Curățarea rezervorului de apă 22
5.16 Tava pentru apă 23
5.17 Congelarea alimentelor proaspete 24
5.18 Recomandări pentru depozitarea alimentelor congelate 25
5.19 Detalii despre congelator ... 26
5.20 Introducerea alimentelor ... 26
5.21 Alarmă de ușă deschisă 27
5.22 Schimbarea direcției de deschidere a ușii 27
5.23 Bec interior 27
6. Întreținerea și curățarea 28
6.1 Prevenirea mirosurilor neplăcute 28
6.2 Protejarea suprafețelor din plastic 28
6.3 Geamuri din sticlă 29
7 Depanare 30

Stimate client,

Dorim să obțineți performanțe optime prin utilizarea produsului nostru, care a fost fabricat în unități moderne și verificat conform celor mai riguroase proceduri de control al calității.

În acest scop, înainte de a utiliza produsul, vă rugăm să citiți manualul de utilizare în întregime și să-l păstrați pentru a-l consulta pe viitor. Dacă predați produsul unei alte persoane, oferiți acest manual împreună cu produsul.

Manualul de utilizare asigură utilizarea rapidă și sigură a produsului.

- Citiți manualul de utilizare înainte de instalarea și utilizarea produsului.
- Respectați întotdeauna instrucțiunile aplicabile referitoare la siguranță.
- Păstrați manualul de utilizare la îndemână pentru a-l putea consulta ulterior.
- Citiți și celelalte documente furnizate împreună cu produsul.

Rețineți că instrucțiunile din acest manual se pot aplica și altor modele de produse. Acest manual precizează cu exactitate toate modificările diferitelor modele.

Simboluri și observații

Acest manual de utilizare conține următoarele simboluri:

	Informații importante și sfaturi utile.
	Pericol de moarte și pagube materiale.
	Pericol de electrocutare.

	Ambalajul produsului este fabricat din materiale reciclabile, în conformitate cu Legislația națională privind mediul înconjurător.

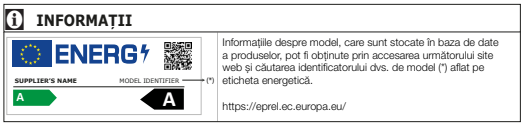

1 Instrucțiuni privind siguranța și mediul

Această secțiune descrie instrucțiunile de siguranță necesare pentru a împiedica riscul de vătămare corporală și pagubele materiale. Nerespectarea acestor instrucțiuni va anula toate tipurile de garanție a produsului.

Domeniu de utilizare

	**AVERTISMENT:** Mențineți duzele de ventilație, din carcasa echipamentului sau din structura integrată, neblocate.
	**AVERTISMENT**: Nu utilizați dispozitive medicale sau alte mijloace pentru a accelera procesul de decongelare decât cele recomandate de producător.
	**AVERTISMENT:** Nu deteriorați circuitul de agent frigorific.
	**AVERTISMENT:** Nu utilizați echipamente electrice în interiorul compartimentelor de depozitare a alimentelor ale echipamentului, dacă acestea nu sunt de tipul recomandat de producător.

Acest echipament este făcut pentru a fi folosit pentru aplicații domestice sau similare, precum:

- chicinete pentru angajați în magazine, birouri sau alte medii de lucru;
- ferme și de către clienți în hoteluri, moteluri și alte medii rezidențiale;
- medii de tip pensiune;
- catering și aplicații care nu țin de vânzarea cu amănuntul asemănătoare.

1.1.Siguranța generală

- Acest produs nu este destinat utilizării de către persoane având capacități fizice, senzoriale și mentale reduse, fără cunoștințe suficiente sau fără experiență, sau de către copii. Aparatul poate fi utilizat de aceste persoane numai dacă sunt supravegheate și dacă au fost instruite de o persoană responsabilă pentru siguranța lor. Nu lăsați copiii să se joace cu acest aparat.
- În caz de funcționare necorespunzătoare, scoateți aparatul din priză.
- După scoaterea aparatului din priză, așteptați cel puțin 5 minute înainte de a-l introduce din nou în priză.
- Scoateți aparatul din priză când nu îl utilizați.

- Nu atingeți priza dacă aveți mâinile umede! Nu trageți de cablu când scoateți aparatul din priză, țineți întotdeauna de ștecăr.
- Nu introduceți frigiderul în priză dacă duza este slăbită.
- Scoateți aparatul din priză în timpul instalării, întreținerii, curățării și reparării.
- Dacă produsul nu se va utiliza o anumită perioadă de timp, scoateți aparatul din priză și scoateți toate alimentele din interior.
- Nu utilizați produsul când compartimentul cu carduri cu circuite aflat în partea superioară din spate a produsului (capac cutie cu carduri electrice) (1) este deschis.

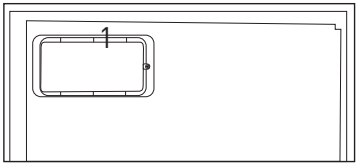

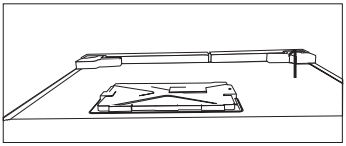

- Nu utilizați aburi sau materiale de curățare cu aburi pentru curățarea frigiderului și topirea gheții din interior. Aburul poate intra în contact cu zonele electrificate și poate cauza scurtcircuit sau șoc electric!
- Nu spălați aparatul pulverizând sau turnând apă pe acesta! Pericol de electrocutare!
- În caz de nefuncționare, nu utilizați produsul, întrucât poate cauza șocuri electrice. Contactați centrul de service autorizat înainte de a face ceva.
- Introduceți produsul într-o priză cu împământare. Împământarea trebuie realizată de un electrician calificat.
- Dacă produsul este prevăzut cu iluminare cu leduri, contactați un centru de service autorizat pentru înlocuire sau în caz de orice probleme.
- Nu atingeți alimentele congelate dacă aveți mâinile umede! Acestea se pot lipi de mâini!
- Nu introduceți băuturi la sticlă sau la doză în congelator. Acestea pot exploda!
- Puneți lichidele în poziție verticală după ce ați închis bine capacul.
- Nu pulverizați substanțe inflamabile în apropierea aparatului. Pericol de incendiu și explozie.
- Nu păstrați materiale inflamabile și produse cu gaze inflamabile (spray-uri etc.) în frigider.

- Nu amplasați recipiente conținând lichide pe aparat. Pulverizarea apei pe o piesă electrificată poate cauza șoc electric și pericol de incendiu.
- Expunerea aparatului la ploaie, zăpadă, soare și vânt afectează siguranța sistemului electric. Atunci când mutați frigiderul, nu apucați de mâner. Mânerul se poate rupe.
- Aveți grijă să nu vă prindeți orice parte a mâinilor sau a corpului în oricare dintre piesele mobile din interiorul produsului.
- Nu călcați sau nu vă sprijiniți de ușă, sertare și alte piese similare ale frigiderului. Astfel produsul poate cădea, iar piesele se pot deteriora.
- Aveți grijă să nu vă împiedicați de cablul de alimentare.

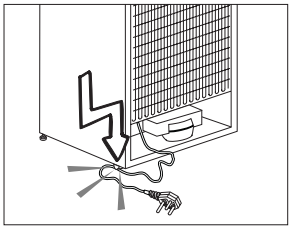

- La amplasarea aparatului, verificați cablul de alimentare să nu fie blocat sau deteriorat.
- Nu puneți prize multiple sau prelungitoare în spatele aparatului.
- Copiilor cu vârsta cuprinsă între 3 și 8 ani li se permite să încarce și să descarce aparatele frigorifice.
- Pentru a evita contaminarea alimentelor, vă rugăm să respectați următoarele instrucțiuni:
- – Deschiderea ușii pentru perioade lungi poate cauza o creștere semnificativă a temperaturii în compartimentele aparatului.
- – Curățați periodic suprafețele care pot intra în contact cu alimentele și sistemele de drenaj accesibile.
- – Curățați rezervoarele de apă dacă acestea nu au mai fost folosite timp de 48 h; clătiți sistemul de apă conectat la sursă de apă dacă nu s-a consumat apă timp de 5 zile.
- – Depozitați carnea crudă și peștele crud în recipiente potrivite în frigider, astfel încât să nu intre în contact cu
- alte alimente sau să picure pe acestea.
- – Compartimentele cu alimente congelate setate la două stele sunt potrivite pentru depozitarea alimentelor pre-congelate, depozitarea sau prepararea înghețatei și obținerea cuburilor de gheață.
- – Compartimentele setate la una, două, trei stele nu sunt potrivite pentru congelarea alimentelor proaspete.
- – Dacă aparatul frigorific este lăsat gol pentru perioade de timp lungi, opriți-l, dezghețați-l, curățați-l,

uscați-l și lăsați
- ușa deschisă pentru a preveni formarea mucegaiului în aparat.

1.1.1 Avertisment HC

Dacă produsul dvs. este echipat cu un sistem de răcire cu gaz R600a, aveți grijă să nu deteriorați sistemul de răcire și conductele în timpul utilizării și transportării aparatului. Acest gaz este inflamabil. Dacă sistemul de răcire este deteriorat, feriți produsul de potențialele surse de incendiu și ventilați încăperea imediat.

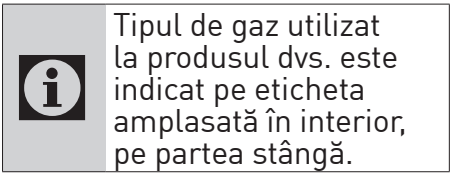

1.1.2 Pentru modelele cu dozator de apă

- Presiunea la racordul de alimentare cu apă rece trebuie să fie de maxim 90 psi (620 kPa). Dacă presiunea apei depășește 80 psi (550 kPa), utilizați o supapă de limitare a presiunii la sistemul dvs. de alimentare. Dacă nu știți cum să verificați presiunea apei, cereți ajutorul unui instalator profesionist.
- În cazul în care există riscul efectului de lovitură de berbec al apei în instalația dvs., utilizați întotdeauna un echipament de prevenire a efectului de lovitură de berbec al apei la instalația dvs. Consultați un instalator profesionist dacă nu sunteți siguri cu privire la lipsa efectului de lovitură de berbec al apei în instalația dvs.
- Nu instalați pe racordul de alimentare cu apă caldă. Luați măsuri de precauție împotriva riscului de înghețare a furtunurilor. Intervalul temperaturii de funcționare a apei va fi 33°F (0,6°C) minim și 100 ° F (38°C) maxim.
- A se utiliza numai apă potabilă.

1.2. Domeniu de utilizare

- Acest produs a fost conceput pentru uz casnic. Acesta nu este destinat utilizării în scopuri comerciale.
- Produsul trebuie utilizat numai pentru a păstra alimente și băuturi.
- Nu păstrați în frigider produse sensibile care necesită temperaturi controlate (vaccinuri, medicamentație sensibilă la căldură, materiale medicale etc.).
- Producătorul nu își asumă răspunderea pentru orice deteriorare cauzată de utilizare sau manipulare incorectă.

- Piesele de schimb originale vor fi furnizate timp de 10 ani, de la data cumpărării produsului.

1.3. Siguranța copiilor

- Nu lăsați materialele la îndemâna copiilor.
- Nu permiteți copiilor să se joace cu produsul.
- Dacă ușa este dotată cu o încuietoare, nu lăsați cheia la îndemâna copiilor.

1.4. Conformitatea cu Directiva DEEE și eliminarea deșeurilor

Acest produs este în conformitate cu Directiva UE privind DEEE (2012/19/UE). Produsul este prevăzut cu un simbol de clasificare pentru deșeuri de echipamente electrice și electronice (WEEE).

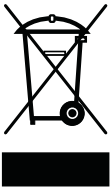

Acest produs a fost fabricat cu componente și materiale de înaltă calitate și care pot fi refolosite și sunt potrivite pentru reciclare. Nu eliminați deșeul produs împreună cu deșeurile menajere normale și alte deșeuri la sfârșitul duratei de viață a produsului. Predați-l la centrul de colectare pentru reciclarea echipamentelor electrice și electronice. Consultați autoritățile locale pentru a afla despre aceste centre de colectare.

1.5. Conformitatea cu Directiva RoHS

- Acest produs este în conformitate cu Directiva UE privind DEEE (65/2011/UE). Acesta nu conține materiale nocive și interzise specificate în Directivă.

1.6. Informațiile de pe ambalaj

- Materialele de ambalare a produsului sunt fabricate din materiale reciclabile în conformitate cu Reglementările naționale privind mediul. Nu eliminați materialele de ambalare împreună cu deșeurile menajere sau alte deșeuri. Predați-le la punctele de colectare a ambalajelor desemnate de autoritățile locale.

1.7. Informații tehnice pentru Wifi + Bluetooth

Banda de frecvență:	2.4GHz (operațional Wi-fi sau Bluetooth)
Putere maximă de transmisie:	< 100mW (operațional Wi-fi sau Bluetooth)
Informații despre software:	Quartz_WiFi.XXX

Declarația de conformitate CE:
Prin prezenta Arçelik A.Ş. declară că acest aparat este în conformitate cu Directiva 2014/53/EU. Textul integral al Declarației de conformitate EU este disponibil la următoarea adresă de internet: Produse, De la: support.grundıg.com
Perioada de asistență pentru actualizarea software-ului legată de securitatea cibernetică definită a produsului este perioada de garanție a produsului. După această perioadă, actualizările de software legate de securitatea cibernetică nu sunt garantate.

2. Frigider

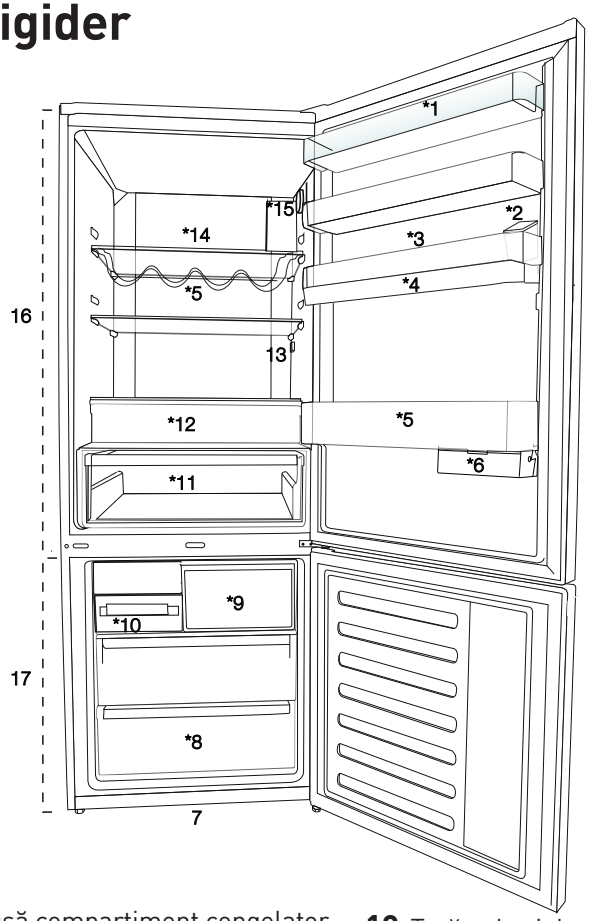

1. Raft ușă compartiment congelator
2. Rezervor de umplere a dozatorului de apă
3. Compartimentul pentru ouă
4. Rezervorul dozatorului de apă
5. Raft pentru sticle
6. Cutii de stocare glisante
7. Picioare reglabile
8. Compartiment congelator
9. Compartiment de congelare rapidă
10. Tavă cuburi de gheață și recipient pentru gheață
11. Compartiment de legume
12. Compartiment de zero grade
13. Bec interior
14. Raft ușă compartiment congelator
15. Buton de reglare temperatură
16. Compartiment congelator
17. Compartimentul congelatorului

*Opțional: Imaginile din acest manual de utilizare sunt schematice și este posibil să nu fie identice cu produsul dvs. Informațiile pentru componentele care nu există în dotarea produsului achiziționat de dvs. se aplică pentru alte modele.

3 Instalarea

3.1 Locul corect pentru montare

Pentru montarea produsului, contactați service-ul autorizat. Pentru pregătirea produsului pentru montare, consultați informațiile din ghidul de utilizare și asigurați-vă că conexiunile electrice și de apă sunt corespunzătoare. Dacă nu, apelați la un electrician și instalator pentru a face aceste conexiuni corespunzătoare.

	**AVERTISMENT:** Producătorul nu își asumă răspunderea pentru orice deteriorare cauzată de lucrările realizate de persoanele neautorizate.
	**AVERTISMENT:** Produsul trebuie scos din priză în timpul instalării. În caz contrar, există pericol de moarte sau de vătămare gravă!
	**AVERTISMENT:** Dacă ușa încăperii este prea îngustă pentru a permite introducerea produsului, demontați ușa și răsuciți produsul în lateral; dacă acest lucru nu funcționează, contactați centrul de service autorizat.

- Plasați produsul pe o suprafață dreaptă pentru evitarea vibrațiilor.
- Plasați produsul la o distanță de cel puțin 30 cm de radiator, plită sau surse similare de căldură și la ce puțin 5 cm de cuptoare electrice.
- Nu expuneți produsul la razele solare directe sau mențineți-l în medii umede.
- Pentru funcționarea eficientă a produsului acesta necesită o circulare a aerului corespunzătoare.
- Dacă produsul va fi montat într-un chioșc, amintiți-vă să lăsați cel puțin 5 cm distanță între produs, tavan și pereți.
- Nu montați produsul în medii cu temperaturi sub -5°C.
- Produsul dvs. necesită o circulație adecvată a aerului pentru a funcționa eficient. Dacă produsul va fi plasat într-o nișă, nu uitați să lăsați o distanță de cel puțin 5 cm între produs și tavan, peretele din spate și pereții laterali.
- Dacă produsul va fi plasat într-o nișă, nu uitați să lăsați o distanță de cel puțin 5 cm între produs și tavan, peretele din spate și pereții laterali. Verificați dacă elementul de protecție a spațiului la peretele din spate se află în locația sa (dacă este furnizat împreună cu produsul). Dacă elementul nu este disponibil sau dacă este pierdut sau căzut, poziționați produsul astfel încât să rămână o distanță de cel puțin 5 cm între suprafața din spate a produsului și pereții camerei. Spațiul din spate este important pentru funcționarea eficientă a produsului.

3.2 Fixarea penelor de fixare din plastic

Utilizați penele de fixare din plastic furnizate împreună cu produsul pentru a avea spațiu suficient pentru circularea aerului între produs și perete.

1- Pentru a fixa penele de fixare, îndepărtați șuruburile de pe produs și utilizați șuruburile furnizate împreună cu penele.

2- Fixați 2 pene din plastic pe capacul ventilării indicate cu j în imagine.

3.3 Reglarea picioarelor

Dacă produsul este instabil, reglați picioarele frontale reglabile răsucind spre dreapta sau stânga.

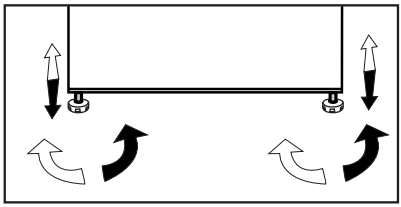

3.4 Conexiunea electric

	AVERTISMENT: Nu utilizați prelungitoare sau multiprize pentru alimentarea la rețeaua electrică.
	AVERTISMENT: Cablul de alimentare deteriorat trebuie înlocuit de un centru de service autorizat.
	Atunci când plasați două frigidere în poziții adiacente, lăsați o distanță de cel puțin 4 cm între acestea.

- Compania noastră nu își va asuma răspunderea pentru orice pagube rezultate din utilizarea fără împământare și conexiune electrică neconformă cu regulamentele naționale.
- Ștecherul cablului de alimentare trebuie să fie ușor accesibil după instalare.
- Nu utilizați ștechere multiple cu sau fără prelungitoare între priza de perete și frigider.

	Avertisment suprafață fierbinte Pereții laterali ai produsului sunt echipați ci țevi de refrigerare pentru a ameliora sistemul de răcire. Agentul frigorific cu temperaturi înalte poate curge prin aceste zone, rezultând suprafețe fierbinți pe pereții laterali. Este normal și nu este nevoie de reparații. Fiți atenți în timp ce atingeți aceste zone. .

4. Pregătirea

4.1 Modalități de reducere a consumului de energie electrică

⚠	Conectarea produsului la sisteme electronice de economisire a energiei este dăunătoare deoarece poate afecta produsul.

- Pentru un aparat autonom; „acest aparat frigorific nu este destinat utilizării ca aparat încorporat.
- Nu lăsați ușa frigiderului deschisă perioade îndelungate de timp.
- Nu introduceți alimente sau băuturi calde în frigider.
- Nu supraîncărcați frigiderul; blocarea circulației aerului din interior va reduce capacitatea de răcire.
- Consumul de energie al frigiderului a fost măsurat pentru situația în care congelatorul este complet încărcat, fără raftul superior, alte sertare și cu sertarele inferioare instalate. Raftul superior din sticlă poate fi utilizat în funcție de forma și dimensiunea alimentelor care urmează a fi congelate.
- În funcție de caracteristicile produsului, decongelarea alimentelor congelate din compartimentul congelatorului va asigura economisirea energiei și va menține calitatea alimentelor.
- Coșurile/sertarele care sunt furnizate împreună cu compartimentul de răcire trebuie trebuie să fie întotdeauna în uz pentru un consum scăzut de energie și pentru condiții de stocare mai bune.
- Contactul alimentelor cu senzorul de temperatură în congelator poate crește consumul de energie aparatului. Astfel, orice contact cu senzorul (senzorii) trebuie evitată.
- Asigurați-vă că alimentele nu intră în contact cu senzorul de temperatură din compartimentul congelatorului descris mai jos.

4.2 Prima utilizare

Înainte de utilizarea frigiderului, asigurați-vă că ați realizat pregătirile necesare conform instrucțiunilor din capitolele „Instrucțiuni privind siguranța și mediul" și „Instalarea".

- Lăsați frigiderul să funcționeze fără alimente timp de 6 ore și nu deschideți ușa, decât dacă este absolut necesar.

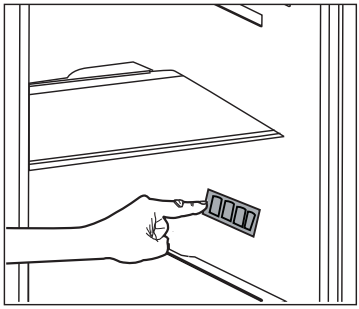

	Se va auzi un sunet când compresorul este cuplat. Este normal să auziți sunetul chiar dacă compresorul este inactiv, din cauza lichidelor și gazelor comprimate din sistemul de răcire.
	Este normal ca marginile frontale ale frigiderului să fie calde. Aceste zone sunt proiectate să se încălzească pentru împiedicarea condensului.

	La unele modele, panoul de instrumente se oprește automat la 5 minute după închiderea ușii. Va fi reactivat atunci când ușa a fost deschisă sau când este apăsată orice tastă.

- Deoarece aerul fierbinte și umed nu pătrunde direct în produs atunci când ușile nu sunt deschise, acesta se va auto-optimiza pentru a vă proteja alimentele. Cu această funcție de economisire a energiei, funcțiile și componentele cum ar fi compresorul, ventilatorul, încălzitorul, dezgheța rea, iluminarea, afișajul etc. vor funcționa conform necesității unui consum minim de energie, menținând în același timp prospețimea alimentelor dvs.

5. Operarea produsului

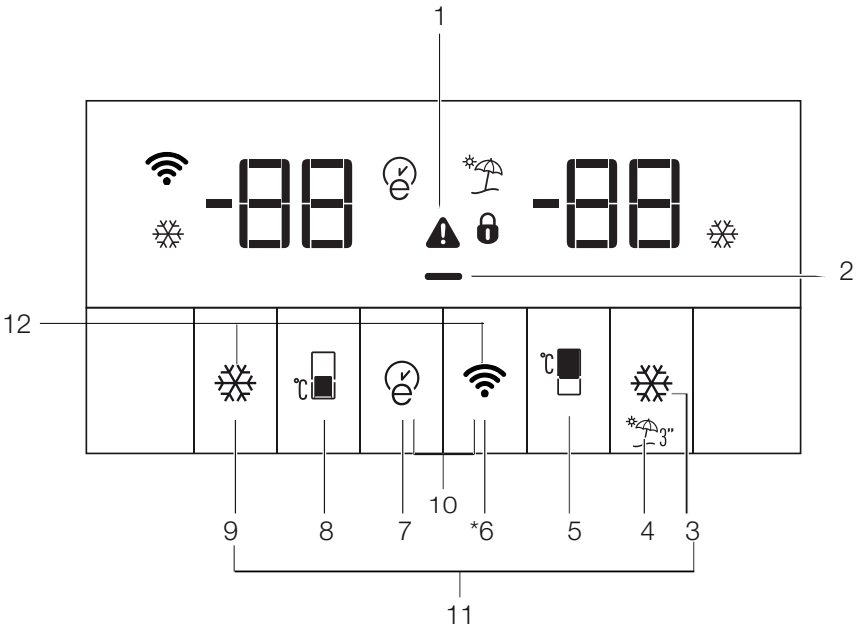

1. Indicator stare eroare
2. Indicator funcție de economisire energie (ecran oprit)
3. Tastă refrigerare rapidă
4. Tastă funcție vacanță
5. Tastă setare temperatură compartiment refrigerare
6. Tastă conexiune fără fir
7. Tastă Eco-fuzzy
8. Tastă setare temperatură compartiment congelator
9. Buton congelare rapidă
10. Blocare taste
11. Tastă pentru schimbarea unității de temperatură

*Opțional: Imaginile din acest manual de utilizare sunt schematice și este posibil să nu fie identice cu produsul dvs. Informațiile pentru componentele care nu există în dotarea produsului achiziționat de dvs. se aplică pentru alte modele.

1. Indicator stare eroare

Dacă frigiderul tău nu răcește în mod adecvat sau dacă există o defecțiune de senzor, acest indicator (⚠) va fi activat. Atunci când acest indicator este activ, indicatorul temperaturii din congelator va indica "E", iar indicatorul temperaturii din frigider va afișa numere precum "1,2,3...". Aceste numere de pe indicator oferă informații referitoare la eroare personalului de service.

Când introduceți alimente fierbinți în congelator sau lăsați ușa deschisă mult timp, semnul de exclamație se poate aprinde o anumită perioadă de timp. Aceasta nu este o defecțiune, acest avertisment va dispărea atunci când alimentele se răcesc.

2. Indicator funcție de economisire energie (ecran oprit)

Dacă ușile produsului sunt ținute închise pentru mai mult timp, funcția de economisire energie este activată automat și simbolul de economisire a energiei este iluminat. (▬)

Atunci când este activată funcția de economisire a energiei, toate simbolurile de pe ecran se vor opri, cu excepția simbolului de economisire a energiei. Atunci când funcția de economisire a energiei este activată, dacă orice buton este apăsat sau ușa este deschisă, funcția de economisire a energiei va fi anulată și simbolurile de pe ecran vor reveni la normal. Funcția de economisire a energiei este o setare implicită din fabrică și nu poate fi anulată.

3. Tastă refrigerare rapidă

Indicatorul de refrigerare rapidă (❄) este aprins și valoarea indicatorului de temperatură a compartimentului de refrigerare va fi afișată ca 1 când este activată funcția de refrigerare rapidă. Pentru a anula această funcție, apăsați din nou butonul de refrigerare rapidă. Indicatorul de refrigerare rapidă va fi oprit și frigiderul va fi resetat la setările normale. Funcția de refrigerare rapidă este anulată automat într-o oră dacă nu o anulați. Dacă doriți să răciți mari cantități de mâncare proaspătă, apăsați butonul de refrigerare rapidă înainte să puneți mâncarea în compartimentul de refrigerare.

4. Tastă funcție vacanță

Pentru a activa funcția de vacanță, apăsați și țineți apăsat butonul (🏖) preț de 3 secunde și indicatorul modului vacanță (⛱) va fi activat. Atunci când este activată o funcție de vacanță, mesajul “- -” este afișat pe indicatorul de temperatură compartimentului de refrigerare și nu este efectuată nicio răcire activă în compartimentul de refrigerare. Nu este recomandat să țineți alimente în compartimentul de răcire atunci când această funcție este activată. Alte compartimente vor continua să fie răcite în funcție de temperaturile setate.

Pentru a anula această funcție, apăsați din nou butonul funcției **vacanță** .

5. Butonul de setare a temperaturii compartimentului de răcire

Atunci când acest buton este apăsat, temperatura compartimentului de refrigerare poate fi setată la valorile 8, 7, 6, 5, 4, 3, 2 și 1. ( )

6. Tastă conexiune wireless (*opțional)

Apăsați și țineți apăsat butonul preț de 3 secunde pentru a începe prima conectare a produsului la rețeaua din casă.

Atunci când conexiunea este stabilită, pictograma conexiunii wireless ( ) va clipi.

Dacă conexiunea la rețeaua de acasă este reușită, pictograma rețelei wireless va rămâne aprinsă constant.

După ce ați stabilit prima conexiune, o apăsare scurtă a acestui buton va activa/dezactiva conexiunea. Pictograma conexiunii wireless va clipi până când este stabilită conexiunea. Odată conexiunea activată, pictograma rețelei wireless va rămâne aprinsă constant. Dacă conexiunea nu poate fi stabilită pentru un anumit timp, verificați setările de conexiune și consultați secțiunea de depanare. Aplicația HomeWhiz este folosită ca interfață de conectare. Pașii de conectare sunt disponibili în aplicația HomeWhiz (în secțiunea HomeWhiz).

7. Tastă Eco-fuzzy

Apăsați butonul eco-fuzzy pentru a activa funcția eco fuzzy. Când această funcție este activată, congelatorul va începe să meargă în modul eco după cel puțin 6 ore și indicatorul de uz economic se va aprinde. ( ) Pentru a dezactiva funcția eco-fuzzy, apăsați din nou butonul eco-fuzzy. Atunci când funcția eco-fuzzy este activată, acest indicator se va aprinde după 6 ore.

8. Tasta de setare a temperaturii congelatorului

Setarea temperaturii se face pentru compartimentul congelatorului.

Atunci când butonul numerotat ( ) este apăsat, puteți seta temperatura compartimentului congelatorului la -18, -19, -20, -21, -22, -23 și -24.

9. Buton congelare rapidă

Apăsați butonul nr. (9) pentru congelare rapidă; indicatorul de congelare rapidă ( ) va fi activat.

Atunci când este activată funcția de congelare rapidă, indicatorul de congelare rapidă este aprins și indicatorul de temperatură a compartimentului de congelare afișează -27. Pentru a anula această funcție, apăsați butonul de congelare rapidă ( ) din nou. Indicatorul de congelare rapidă se va opri și frigiderul va reveni la setări normale. Funcția de congelare rapidă este anulată automat în 24 de ore dacă nu o anulați. Dacă doriți să congelați cantități mari de alimente proaspete, apăsați butonul de congelare rapidă înainte de a așeza alimentele în compartimentul de congelare.

10. Blocare taste

Apăsați și țineți apăsate butoanele de rețea wireless ( ) și eco-fuzzy ( ) simultan preț de 3 secunde. Simbol de blocare taste ( ) se va aprinde și modul de blocare a tastelor va fi activat. Butoanele nu vor funcționa când modul de blocare a tastelor este activ. Apăsați și țineți apăsate butoanele de rețea wireless

(📶) și eco-fuzzy (🌀) simultan preț de 3 secunde. Blocarea tastelor va fi dezactivată.

Folosiți funcția **blocare taste** dacă doriți să evitați schimbarea setării de temperatură a frigiderului.

11. Tasta pentru schimbarea unității de temperatură

Apăsați și țineți apăsate tastele Quick Fridge (Refrigerare rapidă) (❄) și Quick Freeze (Congelare rapidă) (❄) preț de 3 secunde pentru a comuta între Fahrenheit și Celsius.

5.1Recipientul pentru gheață

(Opțional)

- Luați recipientul pentru gheață din compartimentul congelator.
- Umpleți recipientul pentru gheață cu apă.
- Plasați recipientul pentru gheață în compartimentul congelator.

- Gheața va fi gata după aproximativ două ore. Luați recipientul pentru gheață din compartimentul congelatorului și înclinați-l ușor peste suportul pe care-l veți servi. Gheața va curge ușor în suportul de servire.

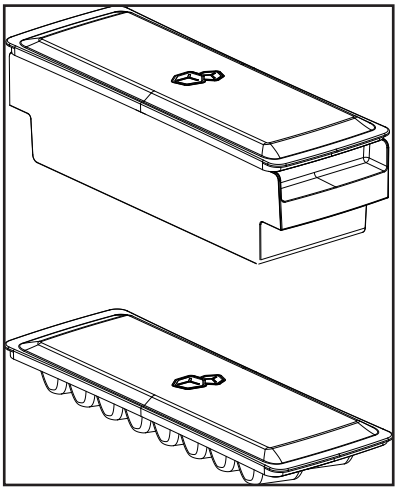

5.2 Raft de ușă mobil

(Opțional)

Raftul de ușă mobil poate fi fixat în 3 poziții diferite.

Pentru a muta raftul, apăsați ușor butoanele de pe margini. Raftul va fi mobil.

Mutați raftul sus sau jos.

Atunci când raftul se află în poziția pe care o doriți, eliberați butoanele. Raftul va fi fixat în poziția acolo unde eliberați butoanele.

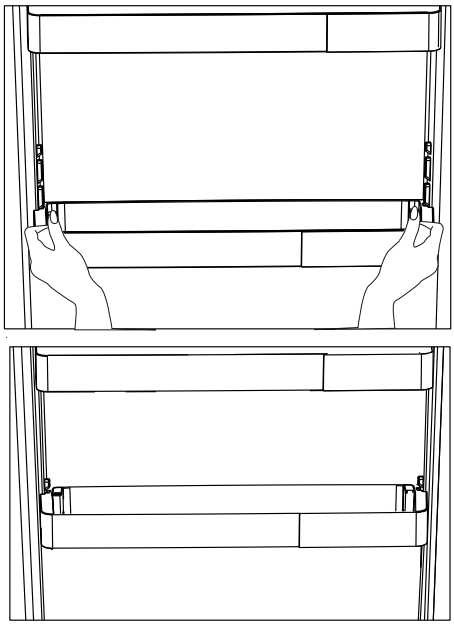

5.3 Cutii de stocare glisante

(Opțional)

Acest accesoriu este proiectat pentru a crește volumul utilizabil ale rafturilor din ușă.

Datorită abilității sale de a fi mutate lateral, acestea vă permit să plasați sticle cu gât lung, borcane sau cutii care dumneavoastră le introduceți în raftul pentru sticle de mai jos.

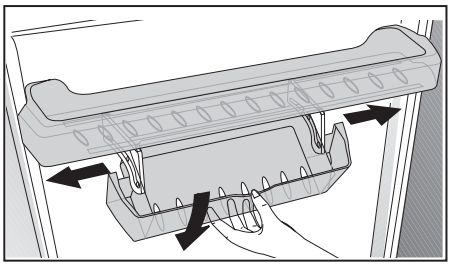

5.4 Folosirea celui de-al doilea compartiment pentru



legume al produsului;

Figura 1.
Așa cum este prezentat în figură,



există două opritoare în cel de-al doilea compartiment pentru legume al produsului K70560.



Figura 2.
Când este închis, al doilea compartiment pentru legume arată ca în Figura 2.

Figura 3.
Cu ușa deschisa la 90°, trageți cel de-al doilea compartiment pentru legume până la primul opritor, după cum este prezentat în Figura 3.



În cazul în care sertarul este deschis mai mult, la început deschideți ușa la cel puțin 135°. După aceea, după cum este prezentat în Figura 4, ridicați cel



de-al doilea compartiment pentru legume aproximativ 5mm, astfel încât să fie trecut de primul opritor.

Figura 4.
După ridicare, trageți cel de-al doilea sertar până la al doilea opritor după cum arată Figura 5.

Figura 5.

5.5 Recipientul pentru gheață

(Opțional)

- Luați recipientul pentru gheață din compartimentul congelator.
- Umpleți recipientul pentru gheață cu apă.
- Plasați recipientul pentru gheață în compartimentul congelator.
- Gheața va fi gata după aproximativ două ore. Luați recipientul pentru gheață din compartimentul congelatorului și înclinați-l ușor peste suportul pe care-l veți servi. Gheața va curge ușor în suportul de servire.

5.6 Suport de ouă

Dumneavoastră puteți plasa suportul de ouă pe ușă sau rafturile corpului. Dacă dumneavoastră decideți să plasați suportul pe rafturi, este recomandat să-l montați pe rafturile de jos deoarece sunt mai reci.



Nu plasați suportul pentru ouă în compartimentul congelatorului.

5.7 Ventilator

Ventilatorul a fost proiectat să distribuie și să circule și să distribuie omogen aerul rece în interiorul frigiderului. Durata de funcționare a ventilatorului poate varia în funcție de caracteristicile produsului dumneavoastră.

În timp ce la unele produse, ventilatorul funcționează doar cu compresor, în altele sistemul de control determină durata de funcționare bazată pe nevoia de răcire.

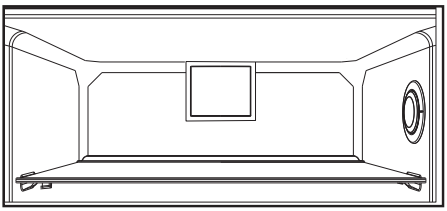

5.8 Compartiment de legume

(Opțional)

Compartimentul de legume al produsului este proiectat să mențină legumele proaspete prin păstrarea umidității. În acest scop, circulația totală a aerului rece este intensificată în compartimentul de legume.

5.9 Compartiment de zero grade

(Opțional)

Utilizați acest compartiment să mențineți alimentele delicate la temperaturi mai scăzute sau produse din carne pentru consum imediat.

Compartimentul de zero grade este cel mai rece compartiment unde alimentele cum ar fi produse lactate, carne pește și pui pot fi depozitate în condiții ideale de depozitare. Fructele și/sau legumele nu trebuie depozitate în acest compartiment.

5.10 Controlul umidității în compartimentul de legume

(Opțional)

Cu caracteristica de control a umidității, coeficientul de umiditate a legumelor și fructelor este ținut sub control și asigură o perioadă mai lungă de prospețime pentru alimente

Pe cât posibil, este recomandat să depozitați legume cu frunze cum ar fi salata verde și spanacul și legume asemănătoare predispuse la pierdere de umezeală nu pe rădăcinile lor ci într-o poziție orizontală în interiorul compartimentului de legume.

Atunci când amplasați legumele, amplasați legumele tari și grele în partea inferioară și cele ușoare și moi în partea superioară, ținând cont de greutățile specifice ale acestora.

Nu lăsați legumele aflate în compartimentul de legume în ambalaje. Lăsarea acestora în pungi de plastic vor cauza descompunerea legumelor într-o perioadă mai scurtă de timp. În termeni de igienă și în situații unde contactul cu alte legume nu este preferat, utilizați materiale de ambalare cum ar fi hârtia care deține o anumită porozitate.

Nu introduceți fructe care au o producție ridicată de gaz etilic cum ar fi perele, caisele, piersicile și merele în același compartiment de legume împreună cu alte legume și fructe. Emiterea gazul etilic din aceste fructe poate cauza ca celelalte fructe și legume să se maturizeze mai rapid și să se descompună într-o perioadă mai scurtă de timp.

5.11 Aparat automat de gheață

(Opțional)

Aparatul automat de gheață vă permite să creați gheață ușor în frigiderul dumneavoastră. Pentru a obține gheață din aparatul de gheață, scoateți rezervorul de apă din compartimentul congelatorului, umpleți-l cu apă și fixați-l înapoi. Primele cuburi de gheață vor fi pregătite în aproximativ 2 ore în sertarul aparatului de gheață localizat în compartimentul congelatorului. După fixarea unui rezervor plin de apă, dumneavoastră puteți obține aproximativ 60-70 cuburi de gheață până când este golit complet

Dacă apa din rezervor a stat timp de 2-3 săptămâni, aceasta trebuie înlocuită.



În produse cu aparat automat de gheață, dumneavoastră veți putea auzi un sunet atunci când gheața cade. Acest sunet este normal și nu reprezintă un semn de avarie.

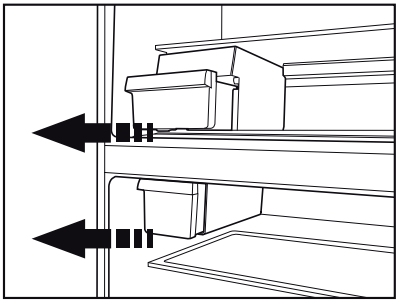

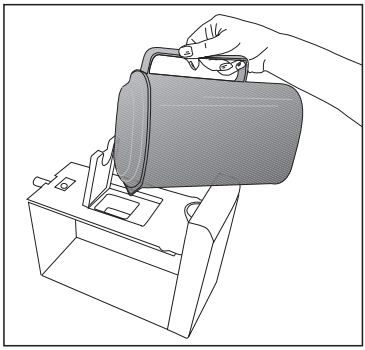

5.12 Aparatul Icematic și recipientul de depozitare a gheții

***opțional**

Utilizarea aparatului Icematic

Umpleți aparatul Icematic cu apă și amplasați-l în suportul său. În aproximativ două ore, gheața va fi gata. Nu demontați aparatul Icematic din suport pentru a lua gheață.

Rotiți butoanele de pe rezervoarele de gheață în sens orar cu 90 de grade.

Cuburile de gheață din rezervoare vor cădea în recipientul pentru gheață de dedesubt.

Puteți scoate recipientul pentru a servi cuburile de gheață.

Dacă doriți, puteți păstra cuburile de gheață în recipient.

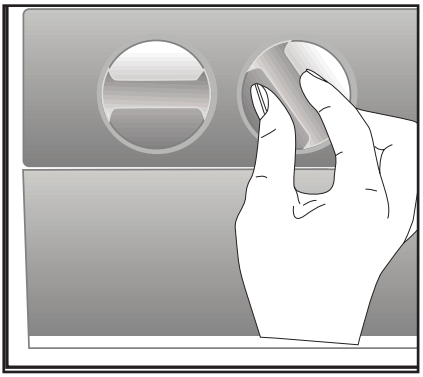

Recipient de depozitare a gheții

Recipientul pentru gheață este destinat doar păstrării cuburilor de gheață. Nu turnați apă în acesta. În caz contrar, se va rupe.

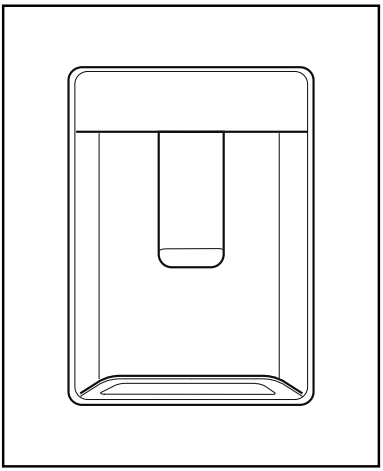

5.13 Dozatorul de apă

***opțional**

Dozatorul de apă este o funcție foarte utilă bazată pe ideea de asigurare a accesului la apă rece fără a deschide ușa frigiderului. Nefiind necesară deschiderea frecventă a ușii, veți economisi energie.

5.14 Utilizarea dozatorului de apă

Apăsați pe brațul dozatorului de apă cu paharul. După ce eliberați brațul, dozatorul se va opri.

Atunci când utilizați dozatorul de apă, debitul maxim poate fi obținut prin acționarea completă a brațului.

Rețineți faptul că respectiva cantitate de apă dozată din dozator depinde de gradul de acționare a brațului.

Atunci când nivel de apă din paharul/ recipientul dumneavoastră crește, reduceți ușor presiunea de la nivelul brațului pentru a preveni revărsarea apei. Dacă apăsați ușor pe braț, apa va curge sub formă de picături; acesta este un lucru normal și nu este o defecțiune.

Umplerea rezervorului dozatorului de apă

Recipientul de umplere a rezervorului de apă se află în interiorul raftului de pe ușă. Puteți deschide capacul recipientului și îl puteți umple cu apă potabilă. Ulterior, închideți capacul.

Avertisment!

- Nu umpleți rezervorul de apă cu niciun alt lichid decât apă, precum sucuri de fructe, lapte, băuturi carbogazoase sau băuturi alcoolice care nu sunt potrivite pentru a fi utilizate într-un dozator de apă. Dozatorul de apă este deteriorat iremediabil dacă folosiți astfel de lichide. Garanția nu acoperă astfel de utilizări necorespunzătoare. Unele substanțe chimice și aditivi incluși în aceste tipuri de băuturi/lichide pot afecta rezervorul de apă și materialele din care este realizat.
- Utilizați numai apă potabilă proaspătă.
- Capacitatea rezervorului de apă este de 3 litri; nu umpleți în exces.
- Apăsați pe brațul dozatorului de apă cu un pahar din material rigid. Dacă utilizați pahare din plastic de unică folosință, apăsați cu degetele dumneavoastră pe brațul din spatele paharului.

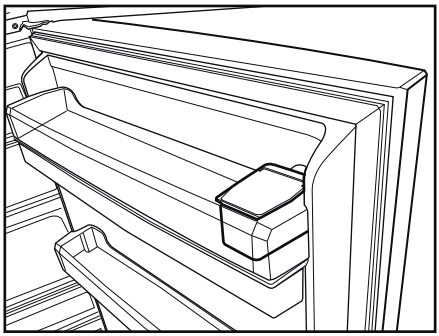

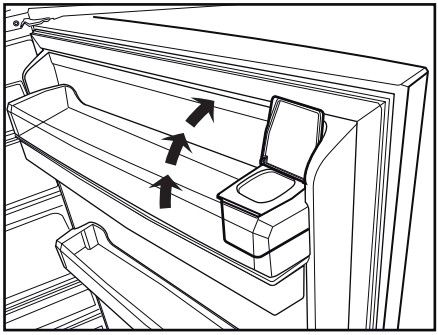

5.15 Curățarea rezervorului de apă

- Demontați rezervorul de umplere cu apă din raftul de pe ușă.
- Demontați raftul de pe ușă prinzându-l de ambele părți.
- Prindeți rezervorul de apă din ambele părți și demontați-l la un unghi de 45°C.

- Curățați rezervorul de apă demontându-i capacul.

Important:
Componentele rezervorului de apă și ale dozatorului de apă nu trebuie spălate în mașina de spălat vase.

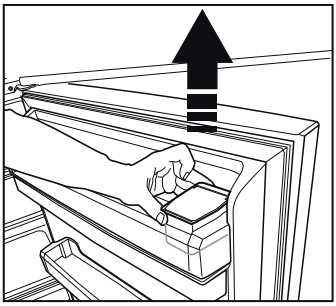

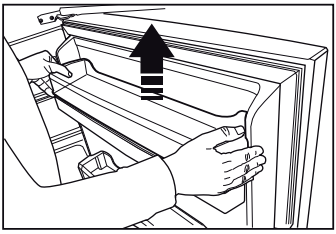

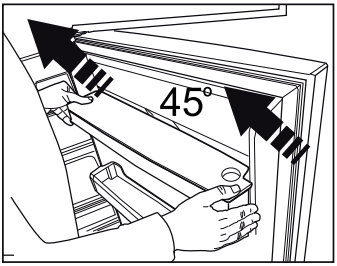

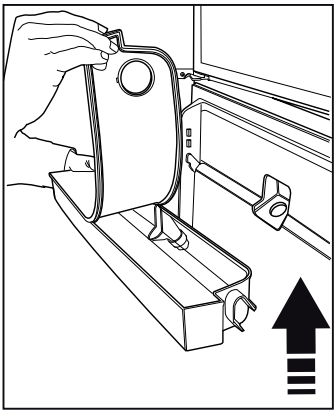

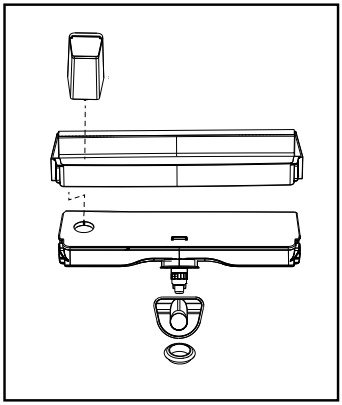

5.16 Tava pentru apă

Picăturile de apă care se scurg la utilizarea dozatorului de apă se acumulează în tava pentru scurgeri.
Scoateți sita din plastic conform celor indicate în figură.
Cu o lavetă curată și uscată, îndepărtați apa care s-a acumulat.

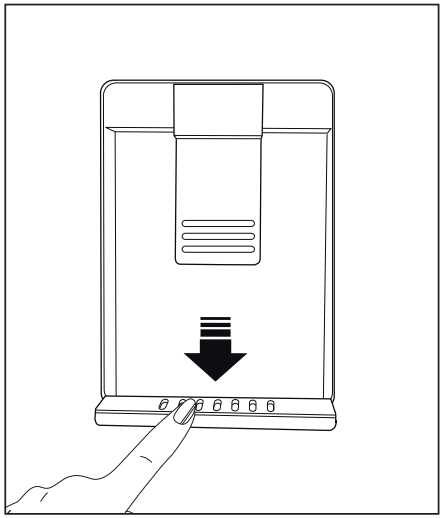

5.17 Congelarea alimentelor proaspete

- Pentru menținerea calității alimentelor, alimentele plasate în compartimentul frigiderului trebuie să fie congelate cât mai repede posibil, utilizați congelarea rapidă pentru acest lucru.
- Congelarea alimentelor atunci când sunt proaspete va extinde timpul de depozitare în compartimentul frigiderului.
- Ambalați alimentele în ambalaje etanșe și sigilați-le.
- Asigurați-vă că alimentele sunt ambalate înainte de a le introduce în congelator. Utilizați compartimente congelatorului, folii de aluminiu și hârtii higrofuge, pungi din plastic sau alte materiale de ambalare în locul hârtiei tradiționale de ambalaj.



Gheața din compartimentul congelatorului se dezgheață în mod automat.

- Marcați fiecare ambalaj prin înscripționarea datei pe ambalaj înainte de congelare. Acest lucru vă va permite să determinați prospețimea fiecărui ambalaj de fiecare dată când frigiderul este deschis. Mențineți alimentele depozitate anterior în față pentru a vă asigura că sunt utilizate primele.
- Alimentele congelate trebuie să fie utilizate imediat după decongelare și nu trebuie recongelate.
- Nu congelați simultan cantități mari de alimente.

5.18 Recomandări pentru depozitarea alimentelor congelate

Compartimentul trebuie să fie setat la cel puțin -18°C.

1. Introduceți alimentele în congelator cât de repede puteți pentru evitarea decongelării.
2. Înainte de congelare, verificați "Data de expirare" de pe ambalaj și asigurați-vă că nu este expirat.
3. Asigurați-vă că ambalajul alimentelor nu este avariat.

Setare temperatură compartiment congelator	Setare temperatură compartiment frigider	Detalii
-18°C	4°C	Aceasta este setarea normală recomandată.
-20,-22 sau -24°C	4°C	Aceste setări sunt recomandate când temperatura ambientală depășește 30°C.
Congelare rapidă	4°C	Folosiți atunci când doriți să congelați alimentele într-o perioadă scurtă de timp. Atunci când procesul se finalizează, produsul se va întoarce la setarea anterioară.
-18°C sau mai rece	2°C	Utilizați aceste setări dacă credeți că congelatorul nu este destul de rece datorită temperaturii ambientale sau deschiderii frecvente a ușii.

5.19 Detalii despre congelator

Conform standardelor IEC 62552, frigiderul trebuie să aibă capacitatea să congeleze o cantitate de 4,5 kg de alimente la o temperatură de -18°C sau mai mică în 24 de ore pentru fiecare 100 de litri din volumul frigiderului. Alimentele pot fi menținute pentru perioade mari de timp la o temperatură de -18°C sau mai scăzută.
Dumneavoastră puteți menține alimentele proaspete luni de zile (în congelator la sau temperaturi de 18°C).
Pentru evitarea decongelării parțiale, alimentele care urmează a fi congelate nu trebuie să vină în contact cu alimentele deja congelate din interior.
Fierbeți legumele și filtrați apa pentru a mări timpul de congelare. După filtrarea apei, plasați alimentele în ambalaje etanșe și introduceți-le în frigider. Bananele, roșiile, salata verde, țelina, ouălele fierte, cartofii sau alte tipuri de alimente nu trebuie să fie congelate. În cazul în care acest tip de aliment se descompune, doar valorile nutriționale și calitățile gustative vor fi afectate într-un mod negativ. Un aliment descompus pune în pericol sănătatea persoanei respective.

5.20 Introducerea alimentelor

Rafturi congelator	Diverse alimente congelate, cum ar fi carne, pește, înghețată, legume etc.
Rafturi compartiment congelator	Alimente din interiorul oalelor, farfurii acoperite și cutii acoperite, ouă (în cofraje acoperite)
Rafturi ușă compartiment congelator	Alimente mici și împachetate sau băuturi
Compartiment de legume	Fructe și legume
Compartiment de alimente proaspete	Alimentele delicate (alimente pentru mic dejun, produse din carne care vor fi consumate într-o perioadă scurtă)

5.21 Alarmă de ușă deschisă

(Opțional)

O alertă sonoră va fi auzită dacă ușa produsului rămâne deschisă cel puțin 1 minut. Alerta sonoră se va opri atunci când ușa este închisă sau un alt buton de pe afișaj (dacă este disponibil) este apăsat.

Alarma de ușă deschisă este emisă către utilizator în mod vizual și acustic. Iluminarea interioară va porni dacă alarma continuă timp de 10 minute.

5.22 Schimbarea direcției de deschidere a ușii

Dumneavoastră puteți schimba direcția de deschidere a ușii bazându-vă pe locația unde îl utilizați. Atunci când aveți nevoie de acest lucru, consultați cel mai apropiat service autorizat.

Explicația de mai sus reprezintă o afirmație generală. Dumneavoastră trebuie să verificați eticheta de avertisment localizată în interiorul ambalajului produsului în legătură cu schimbarea direcției ușii.

5.23 Bec interior

Becul interior utilizează o lampă de tip LED: Contactați service-ul autorizat pentru orice problemă în legătură cu această lampă. Lampa(ile) utilizate în acest produs nu pot fi utilizate pentru iluminat casnic. Utilizarea destinată a acestei lămpi este de a ajuta utilizatorul să introducă alimente în frigider / congelator în siguranță și confortabil.

6. Întreținerea și curățarea

Curățarea periodică a produsul va prelungi durata de viață a acestuia.



AVERTISMENT: Scoateți frigiderul din priză înainte de curățare.

- Nu utilizați pentru curățare instrumente ascuțite și abrazive, săpun, substanțe de curățare, detergenți, gaz, benzină, ceară de lustruire și alte substanțe similare.
- Dizolvați o linguriță de bicarbonat de sodiu în apă. Umeziți o bucată de cârpă în apă și stoarceți-o. Ștergeți dispozitivul cu această cârpă și uscați bine.
- Asigurați-vă că nu intră apă în carcasa lămpii și în alte componente electrice.
- Curățați ușa folosind o cârpă umedă. Scoateți toate alimentele din interior pentru a demonta ușa și rafturile carcasei. Ridicați rafturile ușii în sus pentru a le demonta. Curățați și uscați rafturile, apoi montați-le la loc glisând de sus.
- Nu utilizați apă cu clor sau produse de curățare pe suprafața exterioară și pe componentele placate cu crom ale produsului. Dacă utilizați clor, suprafețele metalice vor rugini.
- Nu folosiți unelte ascuțite sau produse de curățare abrazive, agenți de curățare menajeri, detergenți, benzină, benzen, ceară, etc., altfel etichetele de pe piesele de plastic se vor desprinde și va surveni deformarea. Folosiți apă caldă și o cârpă moale pentruj curățare și ștergere.

6.1 Prevenirea mirosurilor neplăcute

Produsul a fost fabricat fără să prezinte orice mirosuri neplăcute. Cu toate acestea, dacă păstrați alimentele în compartimentele inadecvate și curățați suprafețele interne în mod necorespunzător se pot acumula mirosuri neplăcute.

Pentru a evita acest lucru, curățați interiorul cu apă cu bicarbonat de sodiu la fiecare 15 zile.

- Păstrați alimentele în recipiente închise. Alimentele neetanșate corespunzător pot răspândi microorganisme și se pot acumula mirosuri neplăcute.
- Nu păstrați alimente expirate și alterate în frigider.

6.2 Protejarea suprafețelor din plastic

Dacă ajunge ulei pe suprafețele din plastic, acestea se pot deteriora; curățați-le imediat cu apă caldă.

6.3 Geamuri din sticlă

Scoateți folia de protecție de pe geamuri.

Pe suprafața geamurilor este aplicat un film de protecție. Acest film de protecție minimizează acumularea petelor și vă ajută să scoateți petele posibile și murdăria ușor. Ușile care nu sunt protejate de un asemenea film pot fi supuse la aderarea persistentă a compușilor organici și anorganici bazați pe aer sau apă cum ar fi depunerea de calcar, sărurile minerale, hidrocarburi nearse, oxizi metalici și siliconați care pot cauza ușor și rapid pete și avarii materiale. Menținerea geamurilor curate devine prea dificilă în ciuda curățării regulate. Prin urmare, claritatea și transparența geamului se deteriorează. Metode de curățare puternice și corozive și compuși vor intensifica aceste defecte și accelerează procesul de deteriorare.

Produse de curățare bazate pe apă care nu sunt alcaline și corozive trebuie să fie utilizate în scopul curățării regulate.

Materialele non-alcaline și non-corozive pot fi utilizat pentru curățare pentru ca durata de viață al acestui film să fie extinsă pentru o perioadă mai mare de timp.

Geamurile sunt călite pentru a crește durabilitatea împotriva impacturilor și spargerii.

De asemenea, o peliculă de siguranță este aplicată pe suprafețele posterioare pentru o măsură de siguranță suplimentară pentru a se preveni provocarea avariilor în timpul spargerii.

*Alcaliu reprezintă o bază care formează ioni de hidroxid (OH^-) atunci când este dizolvată în apă.
Li (Litiu), Na (Sodiu), K (Potasiu) Rb (Rubidiu), Cs (Cesiu) și metale artificale și radioacative Fr (Fan-sium) sunt denumite METALE ALICALINE.

7 Depanare

Înainte de a apela la service, citiți această listă. Puteți economisi timp și bani. Această listă include probleme frecvente care nu sunt provocate de defecte de material sau de manoperă. Este posibil ca unele funcții descrise aici să nu se aplice pentru produsul dvs.

Frigiderul nu funcţionează.

- Ștecărul nu este introdus corect în priză. >>> Introduceți ștecherul în priză.
- Siguranța prizei la care este conectat frigiderul sau siguranța principală este arsă. >>> Verificați siguranțele.

Condens pe peretele lateral al compartimentului frigiderului (MULTI ZONE, COOL CONTROL şi FLEXI ZONE).

- Deschidere frecventă a ușii >>> Aveți grijă să nu deschideți ușa frigiderului prea frecvent.
- Mediu foarte umed. >>> Nu instalați produsul în medii umede.
- Alimentele lichide sunt păstrate în recipiente deschise. >>> Păstrați alimentele lichide în recipiente închise.
- Ușa frigiderului este întredeschisă. >>> Nu lăsați ușa frigiderului deschisă perioade îndelungate de timp.
- Termostatul este setat la o temperatură prea scăzută. >>> Setați termostatul la o temperatură adecvată.

Compresorul nu funcţionează.

- Sistemul de protecție termică a compresorului se va activa în cazul penelor de curent sau în cazul deconectării și reconectării la priză, întrucât presiunea din sistemul de răcire nu este încă echilibrată. Frigiderul va porni după circa 6 minute. Contactați un centru de service dacă frigiderul nu pornește după această perioadă.
- Frigiderul este în modul de dezghețare. >>> Acest mod este normal pentru un frigider cu dezghețare automată. Ciclul de dezghețare are loc periodic.
- Frigiderul nu este conectat la priză.>>> Asigurați-vă că ștecărul este introdus corect în priză.
- Reglarea temperaturii nu este corectă. >>> Selectați temperatura adecvată.
- Pană de curent. >>> Frigiderul va continua să funcționeze normal după ce curentul revine.

În timpul funcţionării frigiderului, zgomotul devine mai intens.

- Modul de funcționare a frigiderului se poate modifica în funcție de condițiile ambientale. Acesta este un fenomen normal și nu reprezintă o defecțiune.

Frigiderul porneşte des sau funcţionează perioade îndelungate de timp.

- Este posibil ca noul frigider să fie mai mare decât cel vechi. Frigiderele mari funcționează perioade îndelungate de timp.
- Este posibil ca temperatura din încăpere să fie ridicată. >>> De regulă, frigiderul funcționează perioade îndelungate de timp la temperaturi ridicate în încăpere.
- Este posibil ca frigiderul să fi fost conectat recent la priză sau să fi fost umplut recent cu alimente. >>> Dacă frigiderul a fost conectat recent la priză sau a fost umplut cu alimente, va dura mai mult până frigiderul va atinge temperatura setată. Acest lucru este normal.
- Este posibil ca în frigider să fi fost introduse recent cantități mari de alimente calde. >>> Nu introduceți alimente calde în frigider.
- Este posibil ca ușile să fi fost deschise frecvent sau lăsate întredeschise mai mult timp. >>> Aerul cald care pătrunde în frigider determină funcționarea pe perioade mai îndelungate de timp. Deschideți mai rar ușile.
- Este posibil ca ușa congelatorului sau frigiderului să fi fost lăsată întredeschisă. >>> Verificați dacă ușile sunt închise corect.
- Ați selectat o temperatură foarte joasă. >>> Selectați o temperatură mai ridicată și așteptați ca aceasta să fie atinsă.
- Este posibil ca garnitura ușii frigiderului sau congelatorului să fie murdară, uzată, ruptă sau poziționată incorect. >>> Curățați sau înlocuiți garnitura. Garniturile deteriorate/defecte determină funcționarea pe perioade îndelungate de timp a frigiderului pentru a se asigura temperatura corectă.

Temperatura congelatorului este foarte joasă, iar temperatura frigiderului este adecvată.

- Ați selectat o temperatură foarte joasă a congelatorului. >>> Selectați o temperatură mai ridicată a congelatorului și verificați din nou.

Temperatura frigiderului este foarte joasă, iar temperatura congelatorului este adecvată.

- Ați selectat o temperatură foarte joasă a frigiderului. >>> Selectați o temperatură mai ridicată a frigiderului și verificați din nou.

Alimentele din sertarele frigiderului îngheață.

- Ați selectat o temperatură foarte joasă a frigiderului. >>> Selectați o temperatură mai ridicată a congelatorului și verificați din nou.

Temperatura din frigider sau congelator este foarte mare.

- Ați selectat o temperatură foarte mare a frigiderului. >>> Temperatura setată pentru frigider afectează temperatura congelatorului. Modificați temperatura frigiderului sau congelatorului până când temperatura din frigider sau congelator ajunge la un nivel adecvat.
- Este posibil ca ușile să fi fost deschise frecvent sau lăsate întredeschise mai mult timp. >>> Deschideți mai rar ușile.
- Este posibil ca ușa să fie întredeschisă. >>> Închideți complet ușa.
- Este posibil ca frigiderul să fi fost conectat recent la priză sau să fi fost umplut recent cu alimente. >>> Acest lucru este normal. Dacă frigiderul a fost conectat recent la priză sau a fost umplut cu alimente, va dura mai mult până frigiderul va atinge temperatura setată.
- Este posibil ca în frigider să fi fost introduse recent cantități mari de alimente calde. >>> Nu introduceți alimente calde în frigider.

Vibraţii sau zgomot.

- Podeaua este denivelată sau instabilă. >>> Dacă frigiderul se clatină când este împins ușor, reglați picioarele pentru a echilibra frigiderul. De asemenea, asigurați-vă că podeaua este suficient de stabilă și poate susține frigiderul.
- Zgomotul poate fi provocat de obiectele amplasate pe frigider. >>> Aceste obiecte trebuie îndepărtate de pe frigider.

Frigiderul emite zgomote asemănătoare curgerii sau pulverizării lichidelor etc.

- Funcționarea frigiderului se bazează pe circulația gazelor și lichidelor. >>> Acesta este un fenomen normal și nu reprezintă o defecțiune.

Frigiderul emite un zgomot similar cu şuieratul vântului.

- Frigiderul este prevăzut cu un ventilator pentru răcire. Acesta este un fenomen normal și nu reprezintă o defecțiune.

Condens pe pereţii interiori ai frigiderului.

- Mediile calde și umede favorizează formarea gheții și condensului. Acesta este un fenomen normal și nu reprezintă o defecțiune.
- Este posibil ca ușile să fi fost deschise frecvent sau lăsate întredeschise mai mult timp. >>> Deschideți mai rar ușile; dacă ușa este deschisă, închideți-o.
- Este posibil ca ușa să fie întredeschisă. >>> Închideți complet ușa.

Condens în exteriorul frigiderului sau între uşi.

- Este posibil ca mediul să fie umed. Acest fenomen este normal în medii umede. >>> La reducerea umidității, condensul va dispărea.

Mirosuri neplăcute în frigider.

- Frigiderul nu este curățat periodic. >>> Curățați periodic interiorul frigiderului folosind un burete, apă caldă și carbonatată.
- Este posibil ca mirosul să fie cauzat de anumite recipiente și ambalaje. >>> Folosiți un recipient sau un ambalaj care nu prezintă mirosuri neplăcute.
- Alimentele au fost puse în recipiente deschise. >>> Păstrați alimentele în recipiente închise. Alimentele neetanșate corespunzător pot răspândi microorganisme și se pot acumula mirosuri neplăcute.
- Aruncați toate alimentele expirate sau alterate din frigider.

Ușa nu se închide.

- Este posibil ca alimentele să împiedice închiderea ușii. >>> Mutați alimentele care împiedică închiderea ușii.
- Este posibil ca frigiderul să fie înclinat. >>> Reglați picioarele de pentru a echilibra frigiderul.
- Podeaua este denivelată sau instabilă. >>> Asigurați-vă că podeaua este plană și suficient de stabilă pentru a putea susține frigiderul.

Compartimentul pentru legume este blocat.

- Este posibil ca alimentele să atingă partea superioară a sertarului. >>> Rearanjați alimentele în sertar.



AVERTISMENT: Dacă problema persistă după ce ați urmat instrucțiunile din acest capitol, contactați distribuitorul dvs. sau un centru de service autorizat. Nu încercați să reparați produsul.

MESAJ / AVERTISMENT
Unele defecte (simple) pot fi tratate în mod adecvat de către utilizatorul final făr nicio probemă de siguranță sau utilizare nesigură, cu condiția să fie efectuate în limitele și în conformitate cu următoarele instrucțiuni (vezi secțiunea “Autoreparare”).

Astfel, cu excepția cazului în care secțiunea “Autoreparare” de mai jos autorizează altă acțiune, reparațiile trebuie efectuarte de reparatori profesioniști pentru a evita probelemele de siguranță. Un reparator profesionist are acces la instrucțiuni și la lista cu piese de rezervă pentru acest produs de la producător, potrivit metodele descrise în actele legislative care urmează Directiva 2009/125/EC.
Cu toate acestea, doar agentul de service (adică reparatorii profesioniști autorizați) pe care îl puteți contacta cu ajutorul numărului de telefon oferit în manualul de utilizare/certificatul de garanție sau dealerul dvs. autorizat poate oferi service în termenii garanției. Prin urmare, nu uitați că reparațiile fectuate de reparatori profesioniști care nu sunt autorizați

de Grundig) vor antrena pierderea garanției.

Autorepararea

Reparațiile pot fi făcute de utilizatorul final doar în ceea ce privește următoarele piese: mânerele ușilor,
balamale ușilor, tăvile, coșurile și garniturile ușilor(este disponibilă o listă

actualizată pe support.grundig.com începând cu data de 1 martie 2021).

Mai mult, pentru siguranța produsului și pentru evitarea accidentărilor, autorepararea menționată va fi efectuată urmând instrucțiunile din manualul de utilizare sau care sunt disponibile în

support.grundig.com Pentru siguranța dvs., scoateți produsul din priză înainte să încercați autorepararea.

Reparațiile și încercările de reparație făcute de utilizatorii finali pentru piese care nu usnt incluse într-o astfel de listă și/sau nu urmează instrucțiunile din manualele de utilzare pentru autoreparare

sau care sunt disponibile în support.

grundig.com, pot duce la probleme de siguranță care nu sunt atribuibile

Grundig, și vor anula garanția produsului.

Prin urmare, este recomandat ca utilizatorii finali să se abțină de la a încerca să efectueze reparații care ies din lista menționată cu piese de schimb, contactând în aceste cazuri reparatori profesioniști sau reparatori autorizați. Din contră, astfel de încercări efectuate de utilizatorii finali pot duce la probleme de siguranță și avarierea produsului sau iscarea unui incendiu, a unei indundații, a electrocutării și a accidentărilor grave.

Spre exemplu, dar fără a se limita la, următoarele reparații trebuie adresate către
service-uri profesionale autorizate sau înregistrate: compresoare, circuite de răcire, panoul principal,
placa invertor, panoul de afișaj etc.

Producătorul/vânzătorul nu răspund în niciun caz dacă utilizatorii finali nu se conformează cleor de mai sus.

Disponibilitatea de piese de schimb pentru frigiderul pe care ați cumpărat-o este de 10 ani.
În această perioadă, piesele de schimb originale vor fi disponibile pentru operarea adecvată a frigiderul.
Durata minimă a garanției pentru frigiderul pe care l-ați achiziționat este de 24 de luni.
Acest produs este echipat cu o sursă de iluminare din clasa energetică „G”
Sursa de iluminare a acestui produs trebuie înlocuită numai de către reparatori profesioniști

1 Οδηγίες για την ασφάλεια και το περιβάλλον 3
1.1. Γενική ασφάλεια....3
1.1.1 Προειδοποίηση HC....5
1.1.2 Για μοντέλα με διανομέα νερού....5
1.2. Προβλεπόμενη χρήση....6
1.3. Ασφάλεια των παιδιών....6
1.4. Συμμόρφωση με την Οδηγία περί ΑΗΕΕ και απόρριψη του προϊόντος στο τέλος της ωφέλιμης ζωής του....7
1.5. Συμμόρφωση με την Οδηγία RoHS....7
1.6. Πληροφορίες για τη συσκευασία....7
1.7. Τεχνικές πληροφορίες για Wi-Fi + Bluetooth....7
2 Ψυγείο 8
3. Εγκατάσταση 9
3.1 Σωστή θέση εγκατάστασης....9
3.2 Τοποθέτηση των πλαστικών αποστατών....10
3.3 Ρύθμιση των ποδιών....10
3.4 Σύνδεση ρεύματος....10
4 Προετοιμασία 12
4.1 Τι να κάνετε για εξοικονόμηση ενέργειας....12
4.2 Πρώτη χρήση....13
5. Χειρισμός της συσκευής 14
5.1. Παγοθήκη....17
5.2. Χρήση του δεύτερου συρταριού λαχανικών του προϊόντος:....18
5.3. Ανεμιστήρας....19
5.4. Συρτάρι λαχανικών....19
5.5. Διαμέρισμα μηδέν βαθμών 19
5.6. Κινητό ράφι πόρτας....20
5.7. Συρόμενο κουτί φύλαξης ..20
5.8. Μονάδα απόσμησης....20
5.9 Τμήματα μυρωδικών - HerbBox/HerbFresh....21
5.10 Συρτάρι λαχανικών ελεγχόμενης υγρασίας....22
5.11 Αυτόματο Icematic....22
5.12 Περιγραφή και καθαρισμός του φίλτρου οσμών....23
5.13 Χρήση του διανομέα νερού..23
5.14 Χρήση του διανομέα νερού..24
5.15 Γέμισμα του δοχείου του διανομέα νερού....24
5.16 Καθαρισμός του δοχείου νερού....25
5.17 Δίσκος συλλογής σταγόνων..25
5.18 Κατάψυξη νωπών τροφίμων 26
5.19 Υποδείξεις για τη φύλαξη κατεψυγμένων τροφίμων....26
5.20 Λεπτομέρειες για τη βαθιά κατάψυξη....26
5.21 Τοποθέτηση των τροφίμων..28
5.22 Ειδοποίηση ανοικτής πόρτας (προαιρ.)....29
5.23 Εσωτερικό φως....29
6 Συντήρηση και καθαρισμός 30
6.1 Αποτροπή δυσάρεστων οσμών....31
6.2 Προστασία των πλαστικών επιφανειών....31
6.3 Τζάμια πόρτας....32
7 Επίλυση προβλημάτων 34

- Αγαπητέ Πελάτη,
- Θα θέλαμε να έχετε τη μέγιστη απόδοση από το προϊόν μας, το οποίο κατασκευάστηκε σε μοντέρνες εγκαταστάσεις με σχολαστικούς ελέγχους ποιότητας.
- Για το σκοπό αυτό, διαβάστε πλήρως τις οδηγίες χρήσης πριν χρησιμοποιήσετε το προϊόν και φυλάξτε τις ως πηγή αναφοράς. Αν παραδώσετε το προϊόν σε άλλο άτομο, παραδώστε μαζί και αυτές τις οδηγίες.

Οι οδηγίες χρήσης διασφαλίζουν τη γρήγορη και ασφαλή χρήση του προϊόντος.

- Διαβάστε τις οδηγίες χρήσης πριν την εγκατάσταση και τη λειτουργία του προϊόντος.
- Πάντα να τηρείτε τις εφαρμόσιμες οδηγίες ασφαλείας.
- Να διατηρείτε τις οδηγίες χρήσης σε σημείο με εύκολη πρόσβαση, για μελλοντική χρήση.
- Παρακαλούμε να διαβάστε και οποιαδήποτε άλλη τεκμηρίωση συνοδεύει το προϊόν.

- Να έχετε υπόψη σας ότι αυτές οι οδηγίες χρήσης μπορεί να έχουν εφαρμογή σε περισσότερα από ένα μοντέλα του προϊόντος. Ο οδηγός υποδεικνύει με σαφήνεια τυχόν παραλλαγές των διάφορων μοντέλων.

- **Σύμβολα και παρατηρήσεις**
- **Στις οδηγίες χρήσης χρησιμοποιούνται τα ακόλουθα σύμβολα:**

	Σημαντικές πληροφορίες και χρήσιμες συμβουλές.
	Κίνδυνος για τη ζωή και την περιουσία.
	Κίνδυνος ηλεκτροπληξίας.

	Η συσκευασία του προϊόντος είναι κατασκευασμένη από ανακυκλώσιμα υλικά σύμφωνα με την Εθνική νομοθεσία προστασίας του περιβάλλοντος.

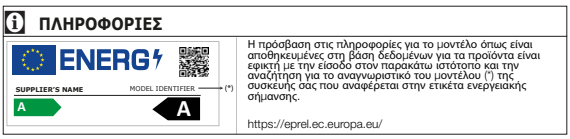

1 Οδηγίες για την ασφάλεια και το περιβάλλον

Αυτή η ενότητα παρέχει τις οδηγίες ασφαλείας που είναι απαραίτητες για την αποτροπή κινδύνου τραυματισμούκαι υλικής ζημιάς. Η μη τήρηση αυτών των οδηγιών θα ακυρώσει κάθε τύπο εγγύησης του .προϊόντος

Προβλεπόμενος σκοπός χρήσης

⚠

ΠΡΟΣΟΧΗ:
βεβαιωθείτε ότι οι οπές εξαερισμού δεν είναι κλεισμένοι όταν η συσκεύη είναι στη δική συσκευασία της και όταν είναι εγκατεστημένη.

ΠΡΟΣΟΧΗ:
Για να επιταχυνθεί η λειτουργία απόψυξης, παρακαλούμε να μη χρησιμοποιείτε κανένα άλλο μηχανικό ή άλλο εξοπλισμό εκτός από τα οποία που συνιστώνται από τον κατασκευαστή.

ΠΡΟΣΟΧΗ:
Μην καταστρέφετε το ψυκτικό κύκλωμα.

ΠΡΟΣΟΧΗ:
Μην χρησιμοποιείτε ηλεκτρικές συσκευές που δεν συνιστώνται από τον κατασκευαστή στους χώρους αποθήκευσης τροφίμων.

Αυτή η συσκευή έχει σχεδιαστεί για χρήση στο σπίτι ή στις παρακάτω περιοχές εφαρμογής
Μπορεί να - χρησιμοποιηθεί στις κουζίνες των γραφείων, μαγαζιών και των άλλων των εργασιακών ,περιβαλλόντων
Μπορεί να - χρησιμοποιηθεί από τους πελάτες στα αγρόκτηματα, ξενοδοχεία, μοτέλ και στα άλλα ,περιβάλλοντα καταλύματος
Στα περιβάλλοντα όπως - ,πανσιόν
Στους τόπους όπου δεν - υπάρχει υπηρεσία τροφοδοσίας .και στις παρόμοιες εφαρμογές

1.1. Γενική ασφάλεια

- Αυτό το προϊόν δεν πρέπει να χρησιμοποιείται από άτομα με μειωμένες σωματικές, αισθητηριακές και πνευματικές ικανότητες, από άτομα που δεν έχουν επαρκή γνώση και εμπειρία και από παιδιά. Η συσκευή αυτή μπορεί να χρησιμοποιείται από τέτοια άτομα υπό την επίβλεψη και καθοδήγηση ατόμου υπεύθυνου για την ασφάλειά τους. Δεν πρέπει να επιτρέπεται σε παιδιά να παίζουν με αυτή τη συσκευή.
- Σε περίπτωση δυσλειτουργίας, αποσυνδέστε τη συσκευή από την πρίζα.
- Μετά την αποσύνδεση της συσκευής από την πρίζα, περιμένετε τουλάχιστον 5 λεπτά πριν τη συνδέσετε πάλι. Αποσυνδέετε το προϊόν από την πρίζα όταν δεν χρησιμοποιείται. Μην αγγίζετε το φις ρευματοληψίας με υγρά χέρια! Μην τραβάτε το καλώδιο για αποσύνδεση από την πρίζα, πάντα να τραβάτε μόνο το φις.

- Σκουπίστε τους ακροδέκτες του φις ρευματοληψίας με ένα στεγνό πανί πριν συνδέσετε το φις στην πρίζα.
- Μη συνδέσετε το ψυγείο στην πρίζα, αν η πρίζα δεν είναι καλά στερεωμένη.
- Αποσυνδέετε το προϊόν πριν από εργασίες εγκατάστασης, συντήρησης, καθαρισμού και επισκευής.
- Αν το προϊόν δεν πρόκειται να χρησιμοποιηθεί για μεγάλο χρονικό διάστημα, αποσυνδέστε το από την πρίζα και αφαιρέστε όλα τα τρόφιμα από το εσωτερικό του.
- Μη χρησιμοποιείτε ατμό ή μέσα καθαρισμού που παράγουν ατμό για τον καθαρισμό του ψυγείου και την τήξη του πάγου στο εσωτερικό του. Ο ατμός μπορεί να έρθει σε επαφή με σημεία που βρίσκονται υπό τάση και να προκαλέσει βραχυκύκλωμα ή ηλεκτροπληξία!
- Μην πλένετε το προϊόν ψεκάζοντας ή χύνοντας νερό πάνω του! Κίνδυνος ηλεκτροπληξίας!
- Σε καμία περίπτωση μη χρησιμοποιήσετε το προϊόν αν είναι ανοικτό το τμήμα στο πάνω ή πίσω μέρος του προϊόντος που περιέχει τις πλακέτες τυπωμένων κυκλωμάτων (κάλυμμα τυπωμένων κυκλωμάτων) (1).

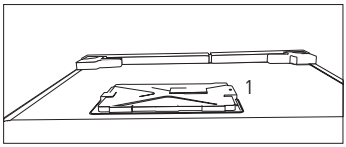

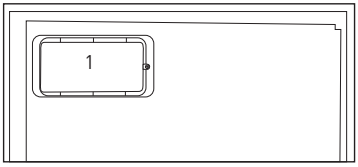

- Σε περίπτωση δυσλειτουργίας μη χρησιμοποιήσετε το προϊόν, γιατί κάτι τέτοιο θα μπορούσε να είναι αιτία ηλεκτροπληξίας. Πριν κάνετε οτιδήποτε απευθυνθείτε σε εξουσιοδοτημένο σέρβις.
- Συνδέστε το προϊόν σε πρίζα με γείωση. Η γείωση πρέπει να έχει γίνει από εξειδικευμένο ηλεκτρολόγο.
- Αν το προϊόν διαθέτει φωτισμό τύπου LED, απευθυνθείτε σε εξουσιοδοτημένο σέρβις για αντικατάσταση ή σε περίπτωση οποιουδήποτε προβλήματος.
- Μην αγγίζετε κατεψυγμένα τρόφιμα με υγρά χέρια! Μπορεί να κολλήσουν στα χέρια σας!
- Μην τοποθετείτε μέσα στο θάλαμο κατάψυξης υγρά σε μπουκάλια ή μεταλλικά κουτάκια. Μπορεί να σκάσουν!
- Τοποθετείτε τα δοχεία υγρών σε όρθια θέση με σφιχτά κλεισμένο το κάλυμμα.
- Μην ψεκάζετε εύφλεκτες ουσίες κοντά στο προϊόν, γιατί

μπορεί να προκληθεί φωτιά ή έκρηξη.

- Μη διατηρείτε μέσα στο ψυγείο εύφλεκτα υλικά και προϊόντα που περιέχουν εύφλεκτο αέριο (σπρέι κλπ.).
- Μην τοποθετείτε πάνω στο προϊόν δοχεία που περιέχουν υγρά. Τυχόν πιτσίλισμα νερού πάνω σε εξάρτημα υπό τάση μπορεί να προκαλέσει ηλεκτροπληξία και κίνδυνο φωτιάς.
- Η έκθεση του προϊόντος σε βροχή, χιόνι, ηλιακή ακτινοβολία και άνεμο θα προκαλέσει ηλεκτρικό κίνδυνο. Όταν αλλάζετε θέση στο προϊόν, μην το τραβήξετε από τη λαβή της πόρτας. Η λαβή μπορεί να αποκολληθεί.
- Προσέξτε να αποφύγετε την παγίδευση οποιουδήποτε τμήματος των χεριών ή του σώματός σας σε οποιοδήποτε από τα κινούμενα μέρη στο εσωτερικό του προϊόντος.
- Μην ανεβαίνετε και μη στηρίζεστε στην πόρτα, τα συρτάρια και παρόμοια μέρη του ψυγείου. Κάτι τέτοιο θα προκαλέσει πτώση του προϊόντος και ζημιά στα μέρη της συσκευής.
- Προσέξτε να μην παγιδευτεί το καλώδιο ρεύματος.

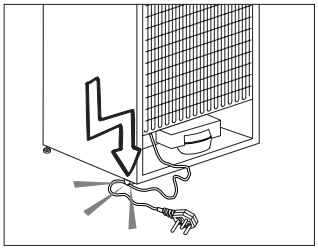

1.1.1 Προειδοποίηση HC

- Αν το προϊόν περιλαμβάνει ψυκτικό σύστημα που χρησιμοποιεί το αέριο R600a, προσέξτε να αποφύγετε την πρόκληση ζημιάς στο ψυκτικό σύστημα και στους σωλήνες τους όταν χρησιμοποιείτε και μεταφέρετε το προϊόν. Αυτό το αέριο είναι εύφλεκτο. Αν έχει υποστεί ζημιά το ψυκτικό σύστημα, κρατήστε το προϊόν μακριά από πηγές φλόγας ή σπινθήρες και αερίστε αμέσως το δωμάτιο.

ⓘ	Η ετικέτα στην εσωτερική αριστερή πλευρά υποδεικνύει τον τύπο αερίου που χρησιμοποιείται στο προϊόν.

1.1.2 Για μοντέλα με διανομέα νερού

- Η μέγιστη πίεση για την είσοδο κρύου νερού θα είναι 90 psi (620 kPa). Αν η πίεση νερού υπερβαίνει τα 80 psi (550 kPa), χρησιμοποιήστε μια βαλβίδα περιορισμού πίεσης στο σύστημα παροχής νερού σας. Αν δεν γνωρίζετε

πώς να ελέγξετε την πίεση νερού, ζητήστε τη βοήθεια επαγγελματία υδραυλικού.

- Αν υπάρχει κίνδυνος φαινομένου υδραυλικού πλήγματος (απότομης μεταβολής πίεσης του νερού) στην εγκατάστασής σας, πάντα να χρησιμοποιείτε στην εγκατάσταση εξοπλισμό αποτροπής του υδραυλικού πλήγματος. Συμβουλευτείτε επαγγελματίες υδραυλικούς αν δεν είστε σίγουροι ότι δεν υπάρχει φαινόμενο υδραυλικού πλήγματος στην εγκατάστασή σας.
- Μην εγκαταστήσετε στην είσοδο ζεστού νερού. Λάβετε μέτρα προφύλαξης έναντι του κινδύνου να παγώσουν οι εύκαμπτοι σωλήνες. Η περιοχή θερμοκρασιών νερού λειτουργίας είναι από ελάχιστη 0,6 °C (33 °F) έως μέγιστη 38 °C (100 °F).
- Να χρησιμοποιείτε μόνο πόσιμο νερό.
- Να χρησιμοποιείτε μόνο πόσιμο νερό.

1.2. Προβλεπόμενη χρήση

- Αυτό το προϊόν έχει σχεδιαστεί για οικιακή χρήση. Δεν προορίζεται για επαγγελματική χρήση.
- Το προϊόν θα πρέπει να χρησιμοποιείται μόνο για τη φύλαξη τροφίμων και ποτών.
- Μη διατηρείτε μέσα στο ψυγείο ευαίσθητα προϊόντα που χρειάζονται ελεγχόμενες θερμοκρασίες (εμβόλια, φάρμακα ευαίσθητα στη θερμοκρασία, ιατρικά υλικά κλπ.).
- Ο κατασκευαστής δεν αποδέχεται καμία ευθύνη για οποιαδήποτε ζημία λόγω κακής χρήσης ή κακής μεταχείρισης.
- Γνήσια ανταλλακτικά θα είναι διαθέσιμα για 10 έτη από την ημερομηνία αγοράς του προϊόντος.

1.3. Ασφάλεια των παιδιών

- Κρατάτε τα υλικά συσκευασίας μακριά από τα παιδιά.
- Μην επιτρέπετε σε παιδιά να παίζουν με το προϊόν.
- Αν η πόρτα του προϊόντος περιλαμβάνει κλειδαριά, κρατάτε το κλειδί μακριά από παιδιά.

1.4. Συμμόρφωση με την Οδηγία περί ΑΗΕΕ και απόρριψη του προϊόντος στο τέλος της ωφέλιμης ζωής του

Αυτό το προϊόν συμμορφώνεται με την Οδηγία ROHS (περιορισμού χρήσης ορισμένων επικίνδυνων ουσιών) της ΕΕ (2012/19/ΕΕ).

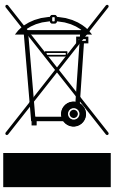

Το προϊόν αυτό φέρει ένα σύμβολο ταξινόμησης για απόβλητα ηλεκτρικού και ηλεκτρονικού εξοπλισμού (ΑΗΗΕ). Αυτό το προϊόν έχει κατασκευαστεί με εξαρτήματα και υλικά υψηλής ποιότητας τα οποία μπορούν να επαναχρησιμοποιηθούν και είναι κατάλληλα για ανακύκλωση. Στο τέλος της ωφέλιμης ζωής του προϊόντος, μην το απορρίψετε μαζί με τα κανονικά οικιακά και άλλα απόβλητα. Παραδώστε το σε κέντρο συλλογής για την ανακύκλωση ηλεκτρικού και ηλεκτρονικού εξοπλισμού. Για να μάθετε περισσότερα σχετικά με αυτά τα κέντρα συλλογής, απευθυνθείτε στις τοπικές σας αρχές.

1.5. Συμμόρφωση με την Οδηγία RoHS

- Αυτό το προϊόν συμμορφώνεται με την Οδηγία ROHS (περιορισμού χρήσης ορισμένων επικίνδυνων ουσιών) της ΕΕ (2011/65/ΕΕ). Δεν περιέχει επιβλαβή και απαγορευμένα υλικά που καθορίζονται στην Οδηγία.

1.6. Πληροφορίες για τη συσκευασία

- Τα υλικά συσκευασίας του προϊόντος κατασκευάζονται από ανακυκλώσιμα υλικά σύμφωνα με του Εθνικούς μας Κανονισμούς Προστασίας του Περιβάλλοντος. Μην απορρίψετε τα υλικά συσκευασίας μαζί με οικιακά ή άλλα απορρίμματα. Παραδώστε τα στα σημεία συλλογής υλικών συσκευασίας που έχουν οριστεί από τις τοπικές αρχές.

1.7. Τεχνικές πληροφορίες για Wi-Fi + Bluetooth

Ζώνη συχνοτήτων:	2,4 GHz (Wi-Fi ή Bluetooth λειτουργικό)
Μέγ. ισχύς εκπομπής:	< 100 mW (Wi-Fi ή Bluetooth λειτουργικό)
Πληροφορίες λογισμικού:	Quartz_WiFi.XXX

Декларация за съответствие за CE:

Arçelik A.Ş. с настоящото декларира, че този уред отговаря на Директива 2014/53/ЕС. Пълният текст на декларацията за съответствие на EU е достъпен на следния интернет адрес: Продукти, От: support.grundig.com

Η καθορισμένη περίοδος υποστήριξης ενημέρωσης λογισμικού που σχετίζεται με την ασφάλεια στον κυβερνοχώρο του προϊόντος είναι η περίοδος εγγύησης του προϊόντος. Μετά από αυτό το διάστημα, οι ενημερώσεις λογισμικού που σχετίζονται με την ασφάλεια στον κυβερνοχώρο δεν είναι εγγυημένες.

2 Ψυγείο

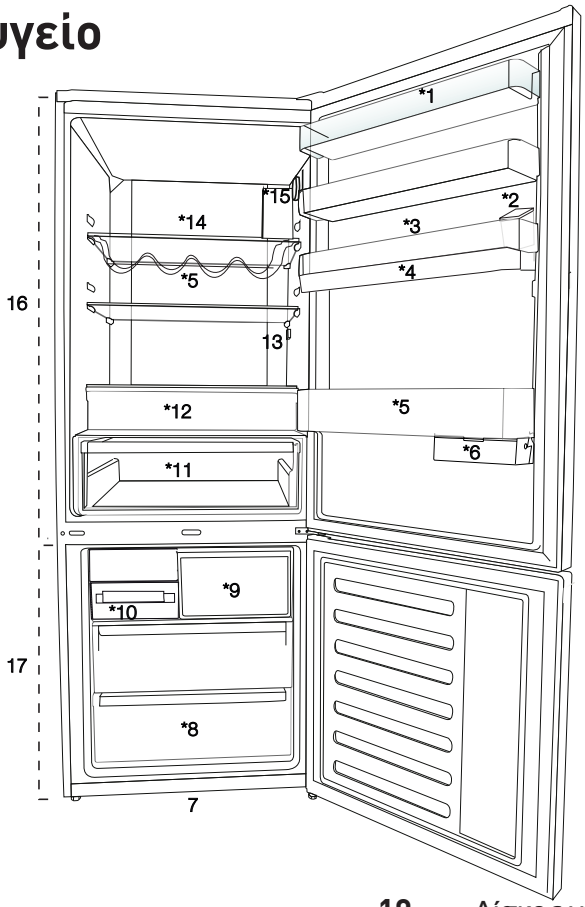

1. Ράφι πόρτας θαλάμου συντήρησης
2. Δοχείο πλήρωσης διανομέα νερού
3. Τμήμα αυγών
4. Ρεζερβουάρ διανομέα νερού
5. Ράφι μπουκαλιών
6. Συρόμενο δοχείο αποθήκευσης
7. Ρυθμιζόμενα πόδια
8. Θάλαμος βαθιάς κατάψυξης
9. Χώρος ταχείας κατάψυξης
10. Δίσκος για παγάκια & Θήκη για παγάκια
11. Συρτάρι λαχανικών
12. Διαμέρισμα μηδέν βαθμών
13. Εσωτερικός φωτισμός
14. Γυάλινο ράφι θαλάμου συντήρησης
15. Κουμπί ρύθμισης θερμοκρασίας
16. Θάλαμος συντήρησης
17. Χώρος Κατάψυξης

ⓘ	*Προαιρετικός εξοπλισμός: Οι εικόνες σε αυτές τις οδηγίες χρήσης είναι σχηματικές και μπορεί να μην ταιριάζουν ακριβώς στο προϊόν σας. Αν το προϊόν σας δεν περιλαμβάνει τα σχετικά εξαρτήματα, οι πληροφορίες αφορούν άλλα μοντέλα.

3. Εγκατάσταση

3.1 Σωστή θέση εγκατάστασης

Για την εγκατάσταση του προϊόντος, απευθυνθείτε στο Εξουσιοδοτημένο σέρβις. Για να ετοιμάσετε το προϊόν για εγκατάσταση, ανατρέξτε στις πληροφορίες των οδηγιών χρήσης και βεβαιωθείτε ότι οι παροχές ρεύματος και νερού είναι σύμφωνες με τις απαιτήσεις. Διαφορετικά, καλέστε ηλεκτρολόγο και/ή υδραυλικό για την απαιτούμενη προετοιμασία των .παροχών

⚠	**ΠΡΟΕΙΔΟΠΟΙΗΣΗ:** Ο κατασκευαστής δεν αποδέχεται καμία ευθύνη για οποιαδήποτε ζημία προκύψει από εργασίες που εκτελέστηκαν από μη εξουσιοδοτημένα άτομα.
⚠	**ΠΡΟΕΙΔΟΠΟΙΗΣΗ:** Το καλώδιο ρεύματος του προϊόντος πρέπει να είναι αποσυνδεδεμένο από την πρίζα κατά την εγκατάσταση. Σε αντίθετη περίπτωση, μπορεί να προκληθεί θάνατος ή σοβαροί τραυματισμοί!
⚠	**ΠΡΟΕΙΔΟΠΟΙΗΣΗ:** Αν το άνοιγμα της πόρτας του δωματίου είναι πολύ μικρό για να περάσει το προϊόν, αφαιρέστε την πόρτα και γυρίστε το προϊόν στο πλάι. Αν και αυτό δεν ωφελήσει, απευθυνθείτε στο εξουσιοδοτημένο σέρβις.

- Τοποθετήστε το προϊόν σε επίπεδη επιφάνεια, για να αποφύγετε κραδασμούς.
- Τοποθετήστε το προϊόν τουλάχιστον 30 cm μακριά από σόμπα, συσκευή κουζίνας και παρόμοιες πηγές θερμότητας και τουλάχιστον 5 cm από ηλεκτρικούς φούρνους.
- Μην εκθέτετε το προϊόν σε άμεση ηλιακή ακτινοβολία και μην το κρατάτε σε περιβάλλον με υγρασία.
- Το προϊόν χρειάζεται επαρκή κυκλοφορία αέρα για να λειτουργεί αποδοτικά. Αν το προϊόν πρόκειται να τοποθετηθεί μέσα σε εσοχή του τοίχου, θυμηθείτε να αφήσετε απόσταση τουλάχιστον 5 cm ανάμεσα στο προϊόν και την οροφή ή τα τοιχώματα.
- Μην εγκαταστήσετε το προϊόν σε περιβάλλον με θερμοκρασία κάτω από -5°C.
- Το προϊόν σας χρειάζεται επαρκή κυκλοφορία αέρα για να λειτουργεί αποδοτικά. Αν το προϊόν πρόκειται να τοποθετηθεί μέσα σε εσοχή τοίχου, μην παραλείψετε να αφήσετε ελεύθερη απόσταση τουλάχιστον 5 cm ανάμεσα στο προϊόν και την οροφή, τον πίσω τοίχο και τους πλευρικούς τοίχους.
- Αν το προϊόν πρόκειται να τοποθετηθεί μέσα σε εσοχή τοίχου, μην παραλείψετε να αφήσετε ελεύθερη απόσταση τουλάχιστον 5 cm ανάμεσα στο προϊόν και την οροφή, τον πίσω τοίχο και τους πλευρικούς τοίχους. Ελέγξτε αν υπάρχει στη θέση του το εξάρτημα προστασίας της απόστασης από τον πίσω τοίχο (αν παρέχεται με το προϊόν). Αν το εξάρτημα δεν είναι διαθέσιμο, ή αν έχει χαθεί ή πέσει, ρυθμίστε τη θέση του προϊόντος έτσι ώστε να παραμένει διάκενο τουλάχιστον 5 cm ανάμεσα στην

πίσω επιφάνεια του προϊόντος και τον τοίχο του δωματίου. Το διάκενο στην πίσω πλευρά είναι σημαντικό για την αποδοτική λειτουργία του προϊόντος.

3.2 Τοποθέτηση των πλαστικών αποστατών

Μπορείτε να τοποθετήσετε τις 2 πλαστικές σφήνες όπως δείχνει η εικόνα. Οι πλαστικές σφήνες θα παρέχουν την απαιτούμενη απόσταση ανάμεσα στο ψυγείο σας και τον τοίχο ώστε να επιτρέπεται η κυκλοφορία του αέρα. (Το παρουσιαζόμενο σχήμα είναι μόνο ενδεικτικό και δεν αντιστοιχεί απόλυτα στο προϊόν σας.)

3.3 Ρύθμιση των ποδιών

Αν το προϊόν δεν έχει ισορροπήσει καλά στη θέση του, ρυθμίστε τα μπροστινά ρυθμιζόμενα πόδια περιστρέφοντάς τα δεξιά ή αριστερά.

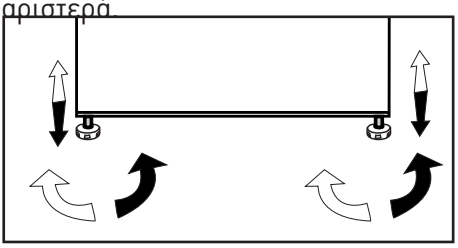

3.4 Σύνδεση ρεύματος

⚠	**ΠΡΟΕΙΔΟΠΟΙΗΣΗ:** Μη χρησιμοποιείτε καλώδια επέκτασης ή πολύπριζα για τη σύνδεση ρεύματος.
⚠	**ΠΡΟΕΙΔΟΠΟΙΗΣΗ:** Αν το καλώδιο έχει υποστεί ζημιά, πρέπει να αντικατασταθεί από το εξουσιοδοτημένο σέρβις.
ℹ	Όταν τοποθετείτε δύο ψυγεία το ένα δίπλα στο άλλο, αφήστε απόσταση τουλάχιστον 4 cm ανάμεσα στις δύο μονάδες.

- Η εταιρεία μας δεν θα αναλάβει ευθύνη για οποιεσδήποτε ζημιές λόγω χρήσης του προϊόντος χωρίς γείωση και χωρίς σύνδεση ρεύματος που συμμορφώνεται με τους εθνικούς κανονισμούς.
- Το φις του καλωδίου ρεύματος πρέπει να είναι εύκολα προσπελάσιμο μετά την εγκατάσταση.
- Συνδέστε το ψυγείο σε γειωμένη πρίζα ρεύματος 220-240V/50 Hz. Το φις πρέπει να περιλαμβάνει ασφάλεια 10-16 A.
- Μη χρησιμοποιείτε πολύπριζο με ή χωρίς καλώδιο επέκτασης ανάμεσα στην πρίζα τοίχου και στο ψυγείο.

ⓘ	Προειδοποίηση για επιφάνειες υψηλής θερμοκρασίας Τα πλευρικά τοιχώματα του προϊόντος περιλαμβάνουν σωλήνες ψυκτικού, για βελτίωση του ψυκτικού συστήματος. Σε αυτές τις περιοχές μπορεί να διέρχεται ψυκτικό σε υψηλές θερμοκρασίες, με αποτέλεσμα να υπάρχουν επιφάνειες υψηλής θερμοκρασίας στα πλευρικά τοιχώματα. Αυτό είναι κάτι κανονικό και δεν απαιτείται σέρβις. Παρακαλούμε να προσέχετε όταν αγγίζετε αυτές τις περιοχές.

4 Προετοιμασία

4.1 Τι να κάνετε για εξοικονόμηση ενέργειας

⚠	Η σύνδεση του προϊόντος σε ηλεκτρονικό σύστημα εξοικονόμησης ενέργειας είναι επιβλαβής, γιατί μπορεί να προκαλέσει ζημιά στο προϊόν.

- Για ελεύθερη συσκευή: Η παρούσα ψυκτική συσκευή δεν προορίζεται να χρησιμοποιηθεί ως εντοιχιζόμενη συσκευή
- Μην κρατάτε τις πόρτες του ψυγείου ανοικτές για μεγάλα χρονικά διαστήματα.
- Μην τοποθετείτε ζεστά τρόφιμα ή ποτά μέσα στο ψυγείο.
- Μη γεμίζετε υπερβολικά το ψυγείο. Αν εμποδίζεται η εσωτερική κυκλοφορία του αέρα, θα μειωθεί η ψυκτική ικανότητα.
- Για να αποθηκεύσετε τη μέγιστη ποσότητα τροφίμων στο θάλαμο συντήρησης του ψυγείου σας, θα πρέπει να αφαιρέσετε τα πάνω συρτάρια και να τα τοποθετήσετε πάνω στο γυάλινο ράφι. Η δηλωθείσα κατανάλωση ενέργειας του ψυγείου σας προσδιορίστηκε αφού είχε αφαιρεθεί ο ψύκτης, ο δίσκος για παγάκια και τα πάνω συρτάρια ώστε να επιτυγχάνεται ο μέγιστος χώρος αποθήκευσης. Η χρήση του από κάτω συρταριού κατά την αποθήκευση τροφίμων συνιστάται θερμά. Η λειτουργία εξοικονόμησης ενέργειας θα πρέπει να είναι ενεργοποιημένη για τη βέλτιστη κατανάλωση ενέργειας.
- Δεν θα πρέπει να εμποδίζετε τη ροή αέρα τοποθετώντας τρόφιμα μπροστά από τον ανεμιστήρα συντήρησης. Πρέπει να αφήνετε ελεύθερο χώρο τουλάχιστον 3 cm μπροστά από το προστατευτικό σύρμα του ανεμιστήρα όταν τοποθετείτε τα τρόφιμα.
- Ανάλογα με τα χαρακτηριστικά του προϊόντος: η απόψυξη κατεψυγμένων τροφίμων στο θάλαμο κατάψυξης θα εξασφαλίσει εξοικονόμηση ενέργειας και θα διατηρήσει την ποιότητα των τροφίμων.
- Πρέπει να αποθηκεύετε τα τρόφιμα στα συρτάρια του θαλάμου συντήρησης για να εξασφαλίζετε εξοικονόμηση ενέργειας και να προστατεύετε το φαγητό με τις καλύτερες συνθήκες.
- Οι συσκευασίες των τροφίμων δεν πρέπει να είναι σε άμεση επαφή με τον αισθητήρα θερμότητας που βρίσκεται στο θάλαμο συντήρησης. Αν είναι σε επαφή με τον αισθητήρα, μπορεί να αυξηθεί η κατανάλωση ενέργειας της συσκευής.
- Βεβαιωθείτε ότι τα τρόφιμα δεν είναι σε επαφή με τον αισθητήρα θερμοκρασίας του θαλάμου συντήρησης που περιγράφεται παρακάτω.

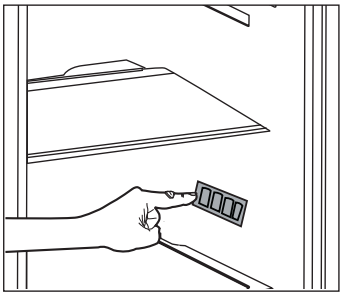

4.2 Πρώτη χρήση

Πριν χρησιμοποιήσετε το ψυγείο σας, βεβαιωθείτε ότι έχουν γίνει οι απαραίτητες προετοιμασίες σύμφωνα με τις οδηγίες στα τμήματα "Οδηγίες για την ασφάλεια και το περιβάλλον" και "Εγκατάσταση".

- Διατηρήστε το προϊόν σε λειτουργία χωρίς τρόφιμα για 6 ώρες και μην ανοίξετε την πόρτα αν δεν είναι απολύτως αναγκαίο.

ⓘ	Όταν ενεργοποιηθεί ο συμπιεστής θα ακουστεί ένας ήχος. Είναι σημαντικό να ακούτε ήχο όταν ο συμπιεστής είναι ανενεργός, λόγω των συμπιεσμένων υγρών και αερίων στο ψυκτικό σύστημα.
ⓘ	Τα μπροστινά άκρα του προϊόντος μπορεί να θερμαίνονται. Αυτό είναι φυσιολογικό. Αυτές οι περιοχές έχουν σχεδιαστεί να θερμαίνονται για την πρόληψη της συμπύκνωσης.
ⓘ	Σε ορισμένα μοντέλα ο πίνακας ενδείξεων απενεργοποιείται αυτόματα 5 λεπτά μετά το κλείσιμο της πόρτας. Θα ενεργοποιηθεί πάλι όταν ανοίξετε την πόρτα ή πατήσετε οποιοδήποτε κουμπί.

- Επειδή όταν δεν ανοίγονται οι πόρτες της συσκευής δεν θα εισέρχεται απευθείας ζεστός και υγρός αέρας, η συσκευή θα βελτιστοποιεί τη λειτουργία της σε συνθήκες επαρκείς για την προστασία των τροφίμων σας. Λειτουργίες και επί μέρους μονάδες όπως συμπιεστής, ανεμιστήρας, θερμαντήρας, απόψυξη, φωτισμός, οθόνη κλπ. θα λειτουργούν σύμφωνα με τις απαιτήσεις, ώστε να καταναλώνεται η ελάχιστη ενέργεια υπό τις δεδομένες συνθήκες.

5. Χειρισμός της συσκευής

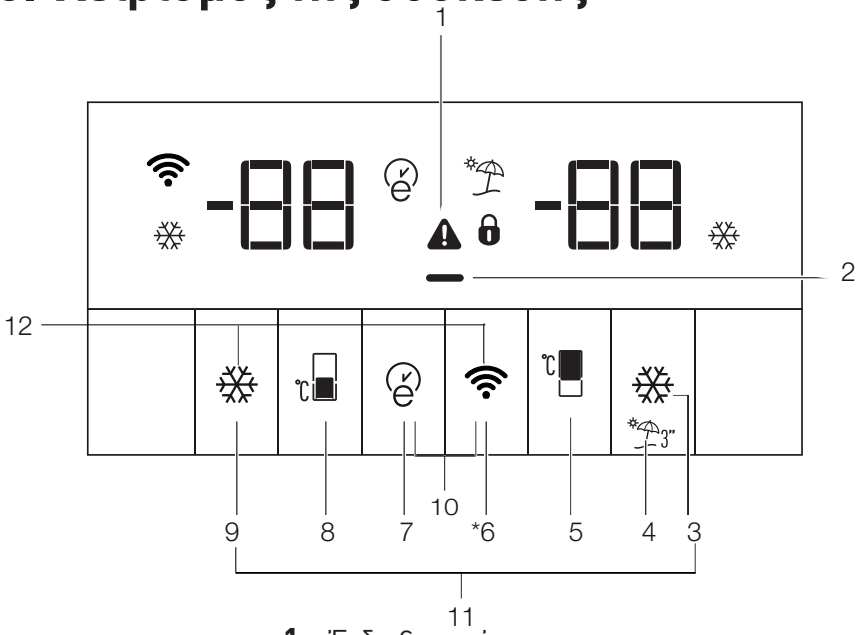

1. Ένδειξη κατάστασης σφάλματος
2. Ένδειξη λειτουργίας εξοικονόμησης ενέργειας (οθόνη ανενεργή)
3. Κουμπί Ταχείας ψύξης
4. Κουμπί λειτουργίας Διακοπών
5. Κουμπί ρύθμισης θερμοκρασίας θαλάμου συντήρησης
6. Κουμπί ασύρματης σύνδεσης
7. Κουμπί Eco-fuzzy
8. Κουμπί ρύθμισης θερμοκρασίας θαλάμου κατάψυξης
9. Κουμπί Ταχείας κατάψυξης
10. Κλείδωμα κουμπιών
11. Κουμπί αλλαγής μονάδας θερμοκρασίας

ⓘ	*Προαιρετικός εξοπλισμός: Οι εικόνες σε αυτές τις οδηγίες χρήσης είναι σχηματικές και μπορεί να μην ταιριάζουν ακριβώς στο προϊόν σας. Αν το προϊόν σας δεν περιλαμβάνει τα σχετικά εξαρτήματα, οι πληροφορίες αφορούν άλλα μοντέλα.

1. Ένδειξη κατάστασης σφάλματος

Αν το ψυγείο σας δεν παρέχει αρκετή ψύξη ή αν υπάρχει βλάβη αισθητήρα, θα ενεργοποιηθεί αυτή η ένδειξη (⚠). Όταν είναι ενεργή αυτή η ένδειξη, η ένδειξη θερμοκρασίας θαλάμου κατάψυξης θα εμφανίζει "E" και η ένδειξη θερμοκρασίας θαλάμου συντήρησης θα εμφανίζει αριθμούς όπως "1, 2, 3...". Αυτοί οι αριθμοί στην ένδειξη παρέχουν στο προσωπικό σέρβις πληροφορίες σχετικά με το σφάλμα.

Αν τοποθετήσετε ζεστά τρόφιμα στο θάλαμο κατάψυξης ή αν αφήσετε την πόρτα ανοικτή για πολλή ώρα, μπορεί να ανάψει το σήμα θαυμαστικού για κάποιο διάστημα. Αυτό δεν αποτελεί βλάβη. Αυτή η προειδοποίηση θα πάψει να εμφανίζεται όταν κρυώσουν τα τρόφιμα.

2. Ένδειξη λειτουργίας εξοικονόμησης ενέργειας (οθόνη ανενεργή)

Αν οι πόρτες της συσκευής διατηρηθούν κλειστές για μεγάλο χρονικό διάστημα, ενεργοποιείται αυτόματα η λειτουργία εξοικονόμησης ενέργειας και ανάβει το σύμβολο εξοικονόμησης ενέργειας. (▬)

Όταν ενεργοποιείται η λειτουργία εξοικονόμησης ενέργειας, σβήνουν όλα τα σύμβολα στην οθόνη, εκτός από το σύμβολο εξοικονόμησης ενέργειας. Όταν είναι ενεργοποιημένη η λειτουργία εξοικονόμησης ενέργειας, αν πατήσετε οποιοδήποτε κουμπί ή ανοίξετε την πόρτα της συσκευής, η λειτουργία εξοικονόμησης ενέργειας θα ακυρωθεί και τα σύμβολα στην οθόνη θα επιστρέψουν στο κανονικό. Η λειτουργία εξοικονόμησης ενέργειας αποτελεί εργοστασιακή ρύθμιση και δεν μπορεί να ακυρωθεί.

3. Κουμπί Ταχείας ψύξης

Όταν ενεργοποιείται η λειτουργία ταχείας ψύξης, ανάβει η ένδειξη Ταχείας Ψύξης (❄) και η τιμή ένδειξης θερμοκρασίας του θαλάμου συντήρησης εμφανίζεται ως 1. Για να ακυρώστε αυτή τη λειτουργία, πατήστε πάλι το κουμπί Ταχείας ψύξης. Η ένδειξη Ταχείας ψύξης θα σβήσει και το ψυγείο θα επανέλθει στις κανονικές ρυθμίσεις του. Η λειτουργία Ταχείας ψύξης ακυρώνεται αυτόματα σε 1 ώρα, αν δεν την ακυρώσετε εσείς. Αν θέλετε να ψύξετε μεγάλες ποσότητες νωπών τροφίμων, πιέστε το κουμπί Ταχείας ψύξης πριν τοποθετήσετε τα τρόφιμα στο θάλαμο συντήρησης.

4. Κουμπί λειτουργίας Διακοπών

Για να ενεργοποιήσετε τη λειτουργία διακοπών, πατήστε παρατεταμένα το κουμπί (🏖) για 3 δευτερόλεπτα και θα ενεργοποιηθεί η ένδειξη της λειτουργίας διακοπών (⛱). Όταν είναι ενεργή η λειτουργία διακοπών, εμφανίζεται "- -" στην ένδειξη θερμοκρασίας του θαλάμου συντήρησης και δεν πραγματοποιείται ενεργή ψύξη στο θάλαμο συντήρησης. Δεν πρέπει να φυλάσσονται τρόφιμα μέσα στο θάλαμο συντήρησης όταν είναι ενεργοποιημένη αυτή η λειτουργία. Οι υπόλοιποι θάλαμοι θα συνεχίσουν να ψύχονται σύμφωνα με τις ρυθμίσεις θερμοκρασίας τους. Για να ακυρώσετε αυτή τη λειτουργία, πατήστε ξανά το κουμπί λειτουργίας **Διακοπών**.

5. Κουμπί ρύθμισης θερμοκρασίας θαλάμου Συντήρησης

Όταν πατηθεί αυτό το κουμπί, η θερμοκρασία του θαλάμου συντήρησης μπορεί να ρυθμιστεί στους 8, 7, 6, 5, 4, 3, 2 και 1 βαθμούς. (🌡)

6. Κουμπί ασύρματης σύνδεσης (*προαιρετικό)

Πατήστε παρατεταμένα το κουμπί για 3 δευτερόλεπτα, για να ξεκινήσετε την πρώτη σύνδεση της συσκευής στο οικιακό δίκτυο.

Καθώς γίνεται η σύνδεση, θα αναβοσβήνει το εικονίδιο ασύρματης σύνδεσης (📶).

Εάν η σύνδεση με το οικιακό δίκτυο γίνει με επιτυχία, το εικονίδιο ασύρματου δικτύου θα παραμείνει σταθερά αναμμένο.

Μόλις γίνει η πρώτη σύνδεση, πατήστε στιγμιαία αυτό το κουμπί για να ενεργοποιήσετε/απενεργοποιήσετε τη σύνδεση. Το εικονίδιο ασύρματης σύνδεσης θα αναβοσβήνει μέχρι να γίνει η σύνδεση. Μόλις ενεργοποιηθεί η σύνδεση, το εικονίδιο ασύρματου δικτύου θα μείνει σταθερά αναμμένο. Εάν περάσει αρκετή ώρα και δεν γίνει η σύνδεση, ελέγξτε τις ρυθμίσεις σύνδεσης του δικτύου σας και ανατρέξτε στην ενότητα αντιμετώπισης προβλημάτων. Η εφαρμογή HomeWhiz χρησιμοποιείται ως η διεπαφή σύνδεσης. Διατίθενται βήματα σύνδεσης στην εφαρμογή HomeWhiz (στην ενότητα HomeWhiz).

7. Κουμπί Eco-fuzzy

Πατήστε το κουμπί Eco fuzzy για να ενεργοποιήσετε τη λειτουργία Eco fuzzy. Όταν είναι ενεργοποιημένη αυτή η λειτουργία, ο καταψύκτης θα ξεκινήσει να λειτουργεί σε οικολογική λειτουργία μετά από τουλάχιστον 6 ώρες και θα ανάψει η ένδειξη εξοικονόμησης ενέργειας. (🌿) Για να απενεργοποιήσετε τη λειτουργία Eco fuzzy, πατήστε ξανά το κουμπί λειτουργίας Eco fuzzy. Όταν είναι ενεργοποιημένη η λειτουργία Eco fuzzy, αυτή η ένδειξη θα ανάψει μετά από 6 ώρες.

8. Κουμπί ρύθμισης θερμοκρασίας θαλάμου κατάψυξης

Η ρύθμιση θερμοκρασίας γίνεται για το θάλαμο κατάψυξης.

Όταν πατηθεί το κουμπί με αριθμό (🌡), μπορείτε να ρυθμίσετε τη θερμοκρασία του θαλάμου κατάψυξης στους -18, -19, -20, -21, -22, -23 και -24 βαθμούς.

9. Κουμπί Ταχείας κατάψυξης

Πατήστε το κουμπί (9) για ταχεία κατάψυξη. Θα ανάψει η ένδειξη ταχείας κατάψυξης (❄).

Όταν είναι ενεργοποιημένη η λειτουργία ταχείας κατάψυξης, η ένδειξη ταχείας κατάψυξης είναι αναμμένη και η ένδειξη θερμοκρασίας του θαλάμου κατάψυξης δείχνει την τιμή -27. Για να ακυρώστε αυτή τη λειτουργία, πατήστε ξανά το κουμπί ταχείας κατάψυξης (❄). Η ένδειξη ταχείας κατάψυξης θα σβήσει και το ψυγείο θα επανέλθει στις κανονικές ρυθμίσεις του. Η λειτουργία ταχείας κατάψυξης ακυρώνεται αυτόματα σε 24 ώρες, αν δεν την ακυρώσετε εσείς. Αν θέλετε να καταψύξετε μεγάλες ποσότητες νωπών τροφίμων, πιέστε το κουμπί ταχείας κατάψυξης πριν τοποθετήσετε τα τρόφιμα στο θάλαμο κατάψυξης.

10. Κλείδωμα κουμπιών

Πατήστε παρατεταμένα και ταυτόχρονα τα κουμπιά (📶) και Eco fuzzy (🌿) για 3 δευτερόλεπτα. Το σύμβολο κλειδώματος κουμπιών

(🔒) θα ανάψει και θα ενεργοποιηθεί η λειτουργία κλειδώματος κουμπιών. Τα κουμπιά δεν θα λειτουργούν όταν είναι ενεργή η λειτουργία κλειδώματος κουμπιών. Πατήστε παρατεταμένα και ταυτόχρονα τα κουμπιά (📶) και Eco fuzzy (🍃) για 3 δευτερόλεπτα. Η λειτουργία κλειδώματος κουμπιών θα απενεργοποιηθεί.

Χρησιμοποιήστε τη λειτουργία **κλειδώματος κουμπιών** αν θέλετε να εμποδίσετε την αλλαγή της ρύθμισης θερμοκρασίας του ψυγείου.

11. Κουμπί αλλαγής μονάδας θερμοκρασίας

Πατήστε παρατεταμένα τα κουμπιά Ταχείας ψύξης (❄) και Ταχείας κατάψυξης (❄) για 3 δευτερόλεπτα, για να αλλάξετε τις μονάδες μεταξύ Φαρενάιτ και Κελσίου.

5.1. Παγοθήκη

***προαιρετικός εξοπλισμός**

- Αφαιρέστε την παγοθήκη από το θάλαμο κατάψυξης.
- Γεμίστε την παγοθήκη με νερό.
- Τοποθετήστε την παγοθήκη στο θάλαμο κατάψυξης.

- Ο πάγος θα είναι έτοιμος μετά από περίπου δύο ώρες. Αφαιρέστε την παγοθήκη από τον θάλαμο κατάψυξης και λυγίστε την ελαφρά πάνω από το σκεύος που θέλετε να σερβίρετε τον πάγο. Ο πάγος θα μεταφερθεί εύκολα στο σκεύος σερβιρίσματος.

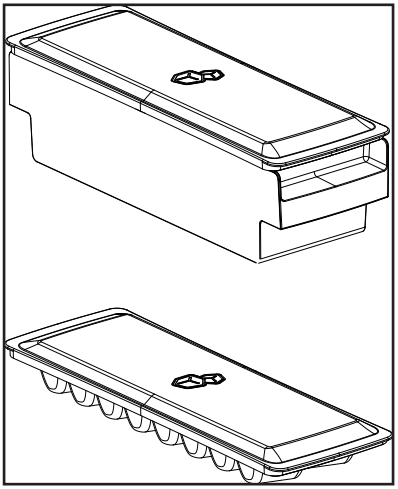

5.2. Χρήση του δεύτερου συρταριού λαχανικών



του προϊόντος:

Εικόνα 1.
Όπως δείχνει η εικόνα, υπάρχουν 2 στοπ στο δεύτερο συρτάρι



λαχανικών του προϊόντος μοντέλου K70560.



Εικόνα 2.
Το δεύτερο συρτάρι λαχανικών φαίνεται όπως στην Εικόνα 2 όταν είναι κλεισμένο.

Εικόνα 3.
Με την πόρτα της συσκευής ανοιχτή στις 90°, τραβήξτε το δεύτερο



συρτάρι λαχανικών ως το δεύτερο στοπ, όπως δείχνει η Εικόνα 3. Σε περίπτωση που το συρτάρι είναι πιο ανοιχτό, πρώτα ανοίξτε την πόρτα της συσκευής κατά τουλάχιστον 135°. Κατόπιν, όπως δείχνει η Εικόνα 4, ανυψώστε



το δεύτερο συρτάρι λαχανικών για περίπου 5 mm ώστε να ελευθερωθεί από το πρώτο στοπ.

Εικόνα 4.
Αφού ανυψώσετε το δεύτερο συρτάρι λαχανικών τραβήξτε ως το δεύτερο στοπ, όπως δείχνει η Εικόνα 5.

Εικόνα 5.

5.3. Ανεμιστήρας

Ο ανεμιστήρας έχει σχεδιαστεί για να διασφαλίζει ομοιογενή κατανομή και κυκλοφορία του αέρα στο εσωτερικό του ψυγείου σας. Ο χρόνος λειτουργίας του ανεμιστήρα μπορεί να διαφέρει ανάλογα με τα χαρακτηριστικά του προϊόντος σας.
Ενώ σε ορισμένα προϊόντα ο ανεμιστήρας λειτουργεί μόνο μαζί με το συμπιεστή, σε άλλα το σύστημα ελέγχου καθορίζει το χρόνο λειτουργίας του ανεμιστήρα σύμφωνα με τις απαιτήσεις ψύξης.

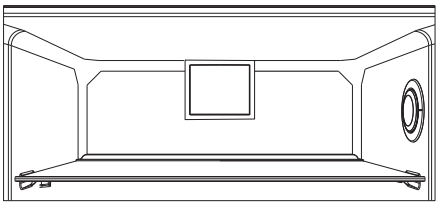

5.4. Συρτάρι λαχανικών

***προαιρετικός εξοπλισμός**
Το συρτάρι λαχανικών του προϊόντος έχει σχεδιαστεί ώστε να διατηρεί φρέσκα τα λαχανικά διατηρώντας την υγρασία του χώρου. Για το σκοπό αυτό, η συνολική κυκλοφορία ψυχρού αέρα γίνεται πιο έντονη στο συρτάρι .λαχανικών

5.5. Διαμέρισμα μηδέν βαθμών

***προαιρετικός εξοπλισμός**
Χρησιμοποιείτε αυτό το διαμέρισμα για να διατηρείτε αλλαντικά σε χαμηλότερες θερμοκρασίας ή προϊόντα κρέατος για άμεση κατανάλωση.
Το διαμέρισμα μηδέν βαθμών είναι το πιο κρύο μέρος της συντήρησης, όπου μπορείτε να φυλάσσετε σε ιδανικές συνθήκες είδη όπως γαλακτοκομικά προϊόντα, κρέας, ψάρι και κοτόπουλο. Δεν πρέπει να αποθηκεύετε φρούτα και/ή λαχανικά σε αυτό το διαμέρισμα.

5.6. Κινητό ράφι πόρτας

***προαιρετικός εξοπλισμός**
Το κινητό ράφι πόρτας μπορεί να σταθεροποιηθεί σε 3 διαφορετικές θέσεις.
Για να μετακινήσετε το ράφι, πιέστε ομοιόμορφα τα κουμπιά στο πλάι. Το ράφι θα απελευθερωθεί.
Μετακινήστε το ράφι προς τα πάνω ή κάτω.
Όταν το ράφι είναι στη θέση που θέλετε, ελευθερώστε τα κουμπιά. Το ράφι θα σταθεροποιηθεί πάλι στη θέση όπου ελευθερώσατε τα κουμπιά.

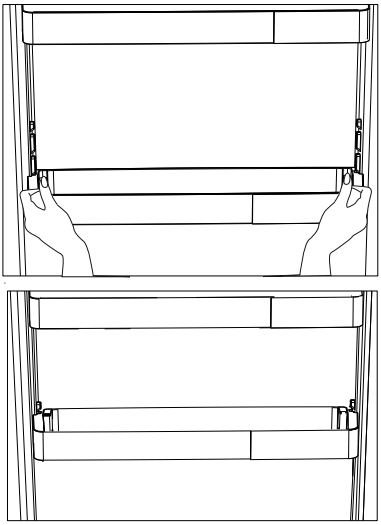

5.7. Συρόμενο κουτί φύλαξης

***προαιρετικός εξοπλισμός**
Αυτό το αξεσουάρ έχει σχεδιαστεί για να αυξάνει τον ωφέλιμο όγκο κάτω από τα συρτάρια πόρτας. Χάρη στην ικανότητά του να κινείται πλευρικά, σας επιτρέπει να τοποθετείτε εύκολα ένα ψηλό μπουκάλι, βάζο ή κουτιά που θέλετε να τοποθετήσετε στο από κάτω ράφι μπουκαλιών.

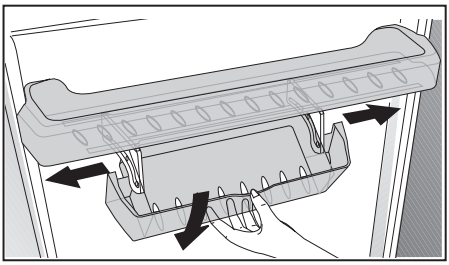

5.8. Μονάδα απόσμησης

(FreshGuard) *προαιρετικός εξοπλισμός
Η μονάδα απόσμησης εξαλείφει γρήγορα τις δυσάρεστες οσμές στο ψυγείο σας πριν διεισδύσουν στις επιφάνειες. Χάρη σε αυτή τη μονάδα που είναι τοποθετημένη στην οροφή του θαλάμου συντήρησης, οι δυσάρεστες οσμές απομακρύνονται όταν ο αέρας εξαναγκάζεται να περάσει από το φίλτρο οσμών και ο καθαρισμένος αέρας απελευθερώνεται πάλι στον θάλαμο συντήρησης. Με αυτόν τον τρόπο, οι δυσάρεστε οσμές που αναδίδονται κατά την φύλαξη των τροφίμων στο ψυγείο εξαλείφονται πριν διεισδύσουν στις επιφάνειες. Αυτό επιτυγχάνεται χάρη στον ανεμιστήρα, το φως LED και το φίλτρο οσμών που είναι ενσωματωμένα στη μονάδα. Κατά την καθημερινή χρήση, η μονάδα

απόσμησης θα ενεργοποιείται αυτόματα σε περιοδική βάση. Για διατήρηση της αποτελεσματικής απόδοσης, συνιστάται να αναθέτετε κάθε 5 χρόνια σε εξουσιοδοτημένο πάροχο σέρβις την αντικατάσταση του φίλτρου της μονάδας απόσμησης. Λόγω του ανεμιστήρα που είναι ενσωματωμένος στη μονάδα, ο θόρυβος που θα ακούτε κατά τη λειτουργία είναι φυσιολογικός. Αν ανοίξετε την πόρτα του θαλάμου συντήρησης ενώ είναι ενεργή η μονάδα, ο ανεμιστήρας θα σταματήσει προσωρινά να λειτουργεί και θα συνεχίσει τον κύκλο λειτουργίας του από το σημείο που σταμάτησε, μετά από λίγη ώρα όταν έχει κλείσει πια η πόρτα της συσκευής.

5.9 Τμήματα μυρωδικών - HerbBox/HerbFresh

Αφαιρέστε τον περιέκτη της μεμβράνης από το τμήμα HerbBox/ HerbFresh+
Αφαιρέστε τη μεμβράνη από τη σακούλα και τοποθετήστε την μέσα στην υποδοχή μεμβράνης όπως δείχνει η εικόνα.
Σφραγίστε πάλι την υποδοχή και τοποθετήστε την μέσα στο τμήμα HerbBox/HerbFresh+.
Τα τμήματα HerbBox-HerbFresh+ είναι ιδιαίτερα κατάλληλα για την αποθήκευση διάφορων μυρωδικών που πρέπει να διατηρούνται σε προστατευμένες συνθήκες. Μπορείτε σε αυτό το τμήμα να αποθηκεύσετε τα μη συσκευασμένα μυρωδικά σας (μαϊντανό, άνηθο κλπ.) σε οριζόντια θέση και να τα διατηρήσετε φρέσκα για πολύ περισσότερο χρόνο.

Η μεμβράνη πρέπει να αντικαθίσταται κάθε έξι μήνες.

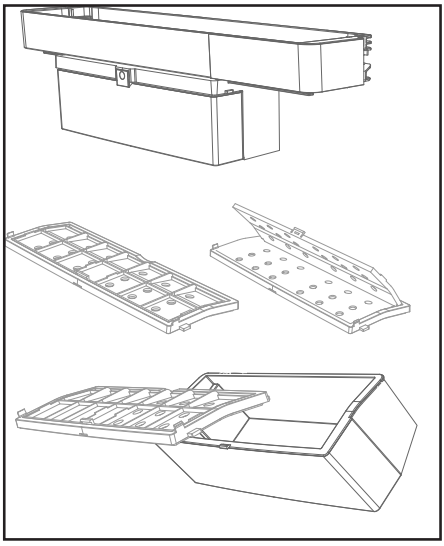

5.10 Συρτάρι λαχανικών ελεγχόμενης υγρασίας

(FreSHelf)

(Αυτή η λειτουργία είναι προαιρετική)

Η περιεκτικότητα σε υγρασία των λαχανικών και των φρούτων διατηρείται υπό έλεγχο με τη δυνατότητα του συρταριού λαχανικών ρυθμιζόμενης υγρασίας. Έτσι διασφαλίζεται ότι τα τρόφιμα διατηρούνται φρέσκα για περισσότερο χρόνο.

Συνιστούμε να τοποθετείτε τα φυλλώδη λαχανικά όπως το μαρούλι, το σπανάκι καθώς και τα λαχανικά που είναι ευαίσθητα στην απώλεια υγρασίας, σε όσο το δυνατόν οριζόντια θέση μέσα στο συρτάρι λαχανικών και όχι πάνω στις ρίζες τους σε κάθετη θέση.

Όταν τοποθετείτε τα λαχανικά, θα πρέπει να λαμβάνετε υπόψη το ειδικό βάρος τους. Τα βαριά και σκληρά λαχανικά πρέπει να τοποθετούνται στο κάτω μέρος του συρταριού λαχανικών

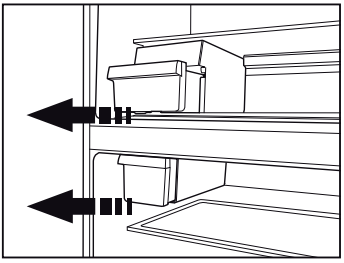

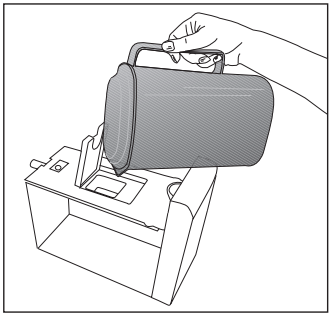

και τα ελαφριά και μαλακά λαχανικά πρέπει να τοποθετούνται από πάνω τους.

Ποτέ μην αφήνετε τα λαχανικά μέσα στις σακούλες τους όταν τα τοποθετείτε στο συρτάρι λαχανικών. Αν αφήσετε τα λαχανικά μέσα στις σακούλες τους, αυτό θα τα κάνει να αποσυντεθούν σε μικρό χρονικό διάστημα. Σε περίπτωση που η επαφή με άλλα λαχανικά δεν είναι επιθυμητή για λόγους υγιεινής, χρησιμοποιήστε ένα διάτρητο χαρτί και άλλα παρόμοια υλικά συσκευασίας, εκτός από σακούλα.

Μην τοποθετείτε αχλάδι, βερίκοκο, ροδάκινο κλπ. και μήλα, ειδικά όταν έχουν υψηλά επίπεδα παραγωγής αιθυλενίου, στο ίδιο συρτάρι λαχανικών με άλλα λαχανικά και φρούτα. Το αιθυλένιο που εκπέμπεται από αυτά τα φρούτα μπορεί να επιταχύνει την ωρίμανση των άλλων φρούτων και να τα κάνει να αποσυντεθούν σε μικρότερο χρονικό διάστημα.

5.11 Αυτόματο Icematic

(Αυτή η λειτουργία είναι προαιρετική)

Το Αυτόματο Icematic σας επιτρέπει να παρασκευάσετε εύκολα πάγο στο ψυγείο σας. Αφαιρέστε το δοχείο νερού από το θάλαμο συντήρησης, γεμίστε το με νερό και τοποθετήστε το πάλι στη θέση του για να αποκτήσετε πάγο από το Icematic.

Τα πρώτα παγάκια θα είναι έτοιμα περίπου σε 2 ώρες στο συρτάρι του Icematic που βρίσκεται στο θάλαμο κατάψυξης.

Αν γεμίσετε πλήρως το δοχείο νερού, θα μπορείτε να αποκτήσετε περίπου 60-70 παγάκια.

Αλλάζετε το νερό στο δοχείο νερού αν έχει παραμείνει αχρησιμοποίητο περίπου 2-3 εβδομάδες.

ⓘ	Για τα προϊόντα που έχουν αυτόματο Icematic, μπορεί να ακούγεται ήχος κατά την πτώση του πάγου. Ο ήχος είναι κανονικός και δεν είναι ένδειξη βλάβης.

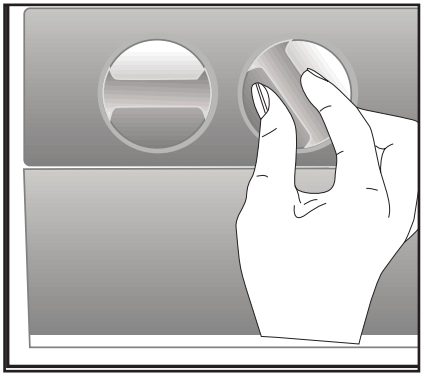

5.12 Περιγραφή και καθαρισμός του φίλτρου οσμών

(Αυτή η λειτουργία είναι προαιρετική)

Το φίλτρο οσμών εμποδίζει το σχηματισμό δυσάρεστων οσμών μέσα στο προϊόν.

1. Τραβήξτε το κάλυμμα του φίλτρου οσμών προς τα κάτω από το μπροστινό τμήμα και αφαιρέστε το όπως δείχνει η εικόνα.
2. Αφήστε το φίλτρο στον ήλιο για μία ημέρα. Σε αυτό το χρονικό διάστημα το φίλτρο θα καθαριστεί.
3. Τοποθετήστε το φίλτρο πάλι πίσω στη θέση του.

ⓘ	Το φίλτρο οσμών πρέπει να καθαρίζεται μία φορά το χρόνο.

5.13 Χρήση του διανομέα νερού

***προαιρετικός εξοπλισμός**

ⓘ	Είναι φυσιολογικό να είναι ζεστά τα πρώτα λίγα ποτήρια νερού που παίρνετε από το διανομέα.

ⓘ	Αν ο διανομέας νερού δεν χρησιμοποιηθεί για πολύ χρόνο, πετάξτε τα πρώτα λίγα ποτήρια νερού για να έχετε φρέσκο νερό.

1. Σπρώξτε με το ποτήρι σας το μοχλό του διανομέα νερού προς τα μέσα. Αν χρησιμοποιείτε μαλακό πλαστικό ποτήρι, θα είναι προτιμότερο να σπρώξετε το μοχλό με το χέρι σας.
2. Αφού γεμίσετε το ποτήρι ως τη στάθμη που θέλετε, ελευθερώσετε το μοχλό.

ⓘ	Παρακαλούμε να έχετε υπόψη σας, ότι η ροή του νερού από το διανομέα εξαρτάται από το πόσο πολύ πιέζετε το μοχλό. Καθώς αυξάνεται η στάθμη του νερού στο κύπελλο/ ποτήρι σας, μειώστε απαλά την πίεση στο μοχλό για να αποφύγετε υπερχείλιση. Αν πιέσετε ελαφρά το βραχίονα, το νερό θα στάξει. Αυτό είναι πολύ φυσιολογικό και όχι σύμπτωμα βλάβης.

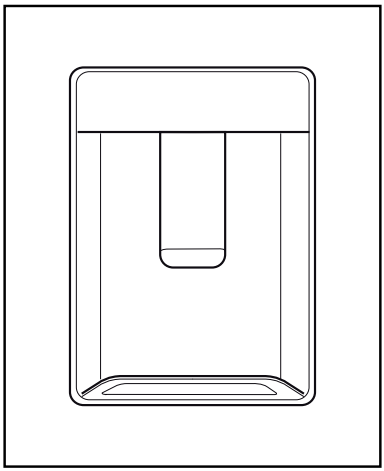

5.14 Χρήση του διανομέα νερού

***προαιρετικός εξοπλισμός**

ⓘ	Είναι φυσιολογικό να είναι ζεστά τα πρώτα λίγα ποτήρια νερού που παίρνετε από το διανομέα.
ⓘ	Αν ο διανομέας νερού δεν χρησιμοποιηθεί για πολύ χρόνο, πετάξτε τα πρώτα λίγα ποτήρια νερού για να έχετε φρέσκο νερό.

1. Σπρώξτε με το ποτήρι σας το μοχλό του διανομέα νερού προς τα μέσα. Αν χρησιμοποιείτε μαλακό πλαστικό ποτήρι, θα είναι προτιμότερο να σπρώξετε το μοχλό με το χέρι σας.
2. Αφού γεμίσετε το ποτήρι ως τη στάθμη που θέλετε, ελευθερώσετε το μοχλό.

ⓘ	Παρακαλούμε να έχετε υπόψη σας, ότι η ροή του νερού από το διανομέα εξαρτάται από το πόσο πολύ πιέζετε το μοχλό. Καθώς αυξάνεται η στάθμη του νερού στο κύπελλο/ ποτήρι σας, μειώστε απαλά την πίεση στο μοχλό για να αποφύγετε υπερχείλιση. Αν πιέσετε ελαφρά το βραχίονα, το νερό θα στάξει. Αυτό είναι πολύ φυσιολογικό και όχι σύμπτωμα βλάβης.

5.15 Γέμισμα του δοχείου του διανομέα νερού

Το ρεζερβουάρ πλήρωσης του δοχείου νερού βρίσκεται μέσα στην υποδοχή της πόρτας.

1. Ανοίξτε το κάλυμμα του δοχείου.
2. Γεμίστε το δοχείο με φρέσκο πόσιμο νερό.
3. Κλείστε το κάλυμμα.

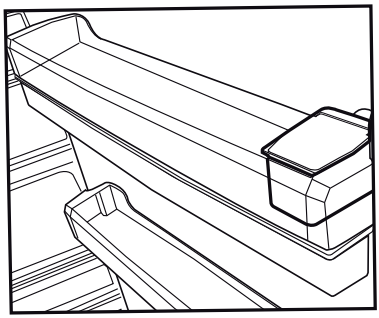

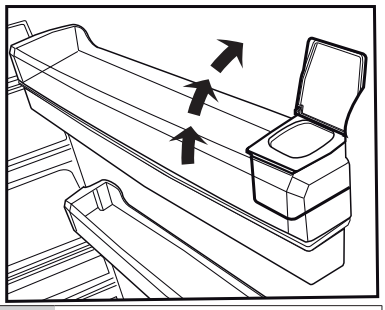

ⓘ	Μη γεμίσετε το δοχείο νερού με οποιοδήποτε άλλο υγρό εκτός από νερό. Οι χυμοί φρούτων, τα ανθρακούχα αναψυκτικά ή οινοπνευματώδη ποτά, κλπ. δεν είναι κατάλληλα για χρήση στο διανομέα νερού. Ο διανομέας νερού θα υποστεί ανεπανόρθωτη ζημιά αν χρησιμοποιηθούν αυτά τα είδη υγρών. Η εγγύηση δεν καλύπτει χρήσεις αυτού του είδους. Ορισμένες χημικές ουσίες και πρόσθετα που περιέχονται σε αυτά τα είδη ποτών/υγρών μπορεί να προξενήσουν ζημιά στο δοχείο νερού.
ⓘ	Να χρησιμοποιείτε μόνο καθαρό πόσιμο νερό.
ⓘ	Η χωρητικότητα του δοχείου νερού είναι 3 λίτρα. Μη γεμίζετε το δοχείο υπερβολικά.

5.16 Καθαρισμός του δοχείου νερού

1. Αφαιρέστε το ρεζερβουάρ προσθήκης νερού από μέσα από την υποδοχή πόρτας.
2. Αφαιρέστε την υποδοχή πόρτας κρατώντας την και από τις δύο πλευρές.
3. Πιάστε το δοχείο νερού και από τις δύο πλευρές και αφαιρέστε το υπό γωνία 45°C.
4. Αφαιρέστε το κάλυμμα του δοχείου νερού και καθαρίστε το δοχείο.

ⓘ	Τα μέρη του δοχείου νερού και του διανομέα νερού δεν πρέπει να πλένονται σε πλυντήριο πιάτων.

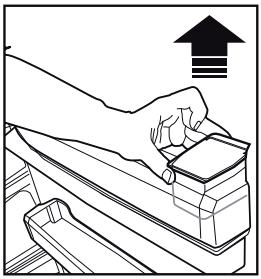

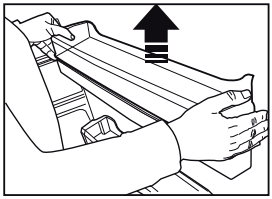

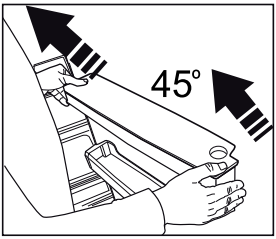

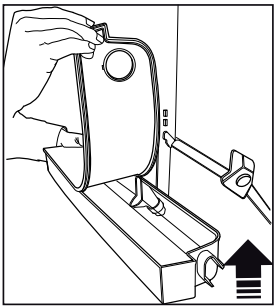

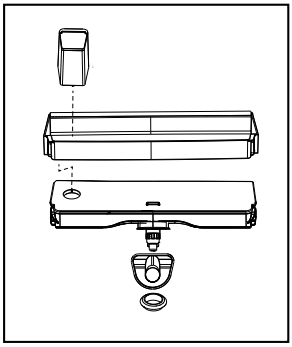

5.17 Δίσκος συλλογής σταγόνων

Σταγόνες νερού που τυχόν στάζουν ενώ χρησιμοποιείτε το διανομέα νερού συγκεντρώνονται στο δίσκο συλλογής σταγόνων.

Αφαιρέστε το πλαστικό φίλτρο όπως δείχνει η εικόνα.

Με ένα καθαρό και στεγνό πανί, αφαιρέστε το νερό που έχει συσσωρευτεί.

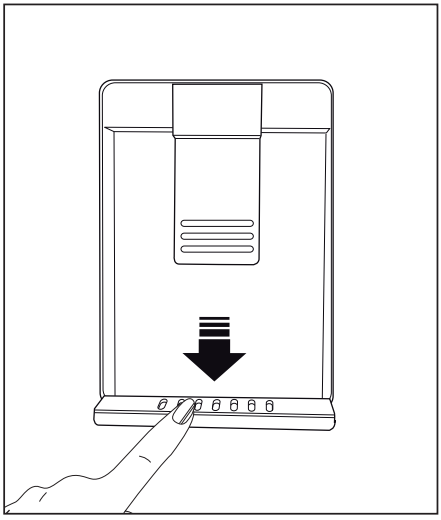

5.18 Κατάψυξη νωπών τροφίμων

- Για να διατηρηθεί η ποιότητα των τροφίμων, τα είδη που τοποθετούνται μέσα στο θάλαμο συντήρησης πρέπει να καταψύχονται όσο το δυνατόν πιο γρήγορα, χρησιμοποιείτε τη λειτουργία ταχείας κατάψυξης.
- Η κατάψυξη των τροφίμων όταν είναι φρέσκα θα επεκτείνει το χρόνο φύλαξης στο θάλαμο κατάψυξης.
- Συσκευάζετε τα τρόφιμα σε αεροστεγείς συσκευασίες και καλά σφραγισμένα.
- Να βεβαιώνεστε ότι τα τρόφιμα έχουν συσκευαστεί πριν τοποθετηθούν μέσα στην κατάψυξη. Να χρησιμοποιείτε δοχεία για κατάψυξη, αλουμινόχαρτο και χαρτί μη διαπερατό στην υγρασία, πλαστικές σακούλες ή παρόμοια υλικά συσκευασίας αντί για το παραδοσιακό χαρτί συσκευασίας.
- Αναγράψτε σε κάθε συσκευασία τροφίμων την ημερομηνία πριν την καταψύξετε. Έτσι θα μπορείτε εύκολα να διαπιστώσετε τη φρεσκάδα κάθε πακέτου, κάθε φορά που ανοίγετε την κατάψυξη. Διατηρείτε τα πιο παλιά είδη στο μπροστινό μέρος για να βεβαιωθείτε ότι θα χρησιμοποιηθούν πρώτα.
- Τα κατεψυγμένα τρόφιμα πρέπει να χρησιμοποιούνται αμέσως μετά την απόψυξη και δεν θα πρέπει να καταψύχονται πάλι.
- Μην καταψύχετε μεγάλες ποσότητες τροφίμων ταυτόχρονα.

5.19 Υποδείξεις για τη φύλαξη κατεψυγμένων τροφίμων

Η θερμοκρασία στο θάλαμο πρέπει να ρυθμιστεί σε τουλάχιστον -18°C.

1. Τοποθετήστε τα τρόφιμα στον καταψύκτη όσο το δυνατόν γρηγορότερα, για να αποφευχθεί η απόψυξη.
2. Πριν τα τοποθετήσετε στην κατάψυξη, ελέγξτε την "Ημερομηνία Λήξης" που αναγράφεται στη συσκευασία για να βεβαιωθείτε ότι δεν έχουν λήξει.
3. Βεβαιωθείτε ότι δεν υπάρχουν ζημιές στη συσκευασία των τροφίμων.

5.20 Λεπτομέρειες για τη βαθιά κατάψυξη

Σύμφωνα με τα πρότυπα IEC 62552, ο θάλαμος κατάψυξης πρέπει να έχει τουλάχιστον τη δυναμικότητα κατάψυξης 4,5 κιλών τροφίμων στους -18°C ή χαμηλότερες θερμοκρασίες σε 24 ώρες για κάθε 100 λίτρα όγκου του θαλάμου κατάψυξης. Τα τρόφιμα μπορούν

να διατηρηθούν για παρατεταμένες περιόδους μόνο σε θερμοκρασίες -18°C ή χαμηλότερες. Μπορείτε να διατηρήσετε τα τρόφιμα φρέσκα για μήνες (στη βαθιά κατάψυξη σε ή κάτω από θερμοκρασίες -18°C). Τα προς κατάψυξη τρόφιμα δεν πρέπει να έρχονται σε επαφή με τα ήδη καταψυγμένα τρόφιμα, για την αποφυγή μερικής απόψυξης των δεύτερων.

Βράστε τα λαχανικά και φιλτράρετε το νερό για να επεκτείνετε το χρόνο φύλαξης των κατεψυγμένων. Τοποθετείτε τα τρόφιμα σε αεροστεγείς συσκευασίες αφού τα φιλτράρετε και τοποθετήστε τα στην κατάψυξη. Μπανάνες, ντομάτες, μαρούλι, σέλινο, βραστά αυγά, πατάτες και παρόμοια τρόφιμα δεν πρέπει να καταψύχονται. Η κατάψυξη αυτών των τροφίμων απλά θα προκαλέσει μείωση της διατροφικής αξίας και της ποιότητας των τροφίμων, καθώς και ενδεχόμενη αλλοίωση που είναι επιβλαβής για την υγεία.

Ρύθμιση θαλάμου Κατάψυξης	Ρύθμιση θαλάμου Συντήρησης	Περιγραφές
-18°C	4°C	Αυτή είναι η προεπιλεγμένη, συνιστώμενη ρύθμιση.
-20, -22 ή -24°C	4°C	Αυτές οι ρυθμίσεις συνιστώνται για θερμοκρασίες περιβάλλοντος που δεν υπερβαίνουν τους 30°C.
Hızlı Dondur	4°C	Χρησιμοποιείτε αυτή τη ρύθμιση για να καταψύξετε τρόφιμα σε σύντομο χρόνο, το προϊόν θα επανέλθει στις προηγούμενες ρυθμίσεις όταν ολοκληρωθεί η διαδικασία.
-18°C ή χαμηλότερη θερμοκρασία	2°C	Χρησιμοποιείτε αυτές τις ρυθμίσεις αν πιστεύετε ότι ο θάλαμος συντήρησης δεν είναι αρκετά κρύος, λόγω της θερμοκρασίας περιβάλλοντος ή συχνού ανοίγματος της πόρτας. Ψυγείο / Οδηγίες Χρήσης

5.21 Τοποθέτηση των τροφίμων

Ράφια θαλάμου κατάψυξηςΡάφια θαλάμου	Διάφορα κατεψυγμένα τρόφιμα περιλαμβανομένου κρέατος, ψαριών, παγωτού, λαχανικών κλπ.
συντήρησηςΡάφια πόρτας	Τρόφιμα μέσα σε σκεύη, σκεπασμένα πιάτα και σκεπασμένες θήκες, αυγά (σε σκεπασμένες θήκες)
συντήρησηςΣυρτάρι λαχανικών	Μικρά και συσκευασμένα τρόφιμα ή ποτά
θαλάμου	Φρούτα και λαχανικά

Διαμέρισμα νωπών τροφίμων	Ντελικατέσεν (είδη πρωινού, προϊόντα κρέατος για άμεση κατανάλωση)

5.22 Ειδοποίηση ανοικτής πόρτας (προαιρ.)

Θα ακουστεί μια ηχητική ειδοποίηση αν η πόρτα του προϊόντος παραμείνει ανοικτή για 1 λεπτό. Η ηχητική ειδοποίηση θα σταματήσει όταν κλείσετε την πόρτα ή πατήσετε οποιοδήποτε κουμπί στην οθόνη (αν διατίθεται).

5.23 Εσωτερικό φως

Για το εσωτερικό φως χρησιμοποιείται μια λάμπα τύπου LED. Για οποιαδήποτε προβλήματα με αυτή τη λάμπα απευθυνθείτε στο εξουσιοδοτημένο σέρβις.

6 Συντήρηση και καθαρισμός

Ο τακτικός καθαρισμός του προϊόντος θα επιμηκύνει την ωφέλιμη διάρκεια ζωής του.

⚠	**ΠΡΟΕΙΔΟΠΟΙΗΣΗ:** Αποσυνδέστε το ψυγείο από το ρεύμα δικτύου πριν τον καθαρισμό.

- Μη χρησιμοποιείτε εργαλεία που είναι αιχμηρά ή χαράζουν, σαπούνι, οικιακά καθαριστικά, απορρυπαντικά, αέριο, βενζίνη, αραιωτικά και παρόμοιες ουσίες για τον καθαρισμό.
- Διαλύστε μια κουταλιά του γλυκού μαγειρικής σόδας σε νερό. Υγράνετε στο νερό αυτό ένα πανί και στύψτε το. Σκουπίστε τη συσκευή με αυτό το πανί και στεγνώστε το σχολαστικά.
- Προσέξτε να κρατήσετε το νερό μακριά από το κάλυμμα της λάμπας και άλλα ηλεκτρικά εξαρτήματα.
- Καθαρίστε την πόρτα χρησιμοποιώντας ένα υγρό πανί. Αφαιρέστε όλα τα είδη μέσα από το ψυγείο για να αφαιρέσετε την πόρτα και τα ράφια των θαλάμων. Ανυψώστε τα ράφια πόρτας για να τα αποσυνδέσετε. Καθαρίστε και στεγνώστε τα ράφια, και κατόπιν επανατοποθετήστε τα συρτά από το πάνω μέρος.
- Μη χρησιμοποιείτε χλωρίνη ή καθαριστικά προϊόντα στην εξωτερική επιφάνεια και στα επιχρωμιωμένα μέρη του προϊόντος. Η χλωρίνη θα προκαλέσει σκουριά σε τέτοιες μεταλλικές επιφάνειες.
- Μη χρησιμοποιείτε εργαλεία που κόβουν και χαράζουν ή σαπούνι, οικιακά καθαριστικά, απορρυπαντικά βενζίνη, βενζόλιο, κερί κλπ, διαφορετικά οι στάμπες στα πλαστικά εξαρτήματα θα σβήσουν και θα προκύψει παραμόρφωση. Για τον καθαρισμό χρησιμοποιήστε χλιαρό νερό και ένα μαλακό πανί και σκουπίστε για να στεγνώσει.

6.1 Αποτροπή δυσάρεστων οσμών

Το προϊόν κατασκευάζεται χωρίς υλικά που αναδίδουν οσμές. Ωστόσο, η φύλαξη των τροφίμων σε ακατάλληλα τμήματα και ο ακατάλληλος καθαρισμός των εσωτερικών επιφανειών μπορεί να έχει ως αποτέλεσμα ανάπτυξη δυσάρεστων οσμών.

Για να το αποφύγετε αυτό, καθαρίζετε το εσωτερικό με διάλυμα μαγειρικής σόδας σε νερό κάθε 15 ημέρες.

- Να διατηρείτε τα τρόφιμα σε κλειστά δοχεία. Από τα μη σφραγισμένα τρόφιμα μπορεί να εξαπλωθούν μικροοργανισμοί και να προκληθούν δυσάρεστες οσμές.
- Μην τοποθετείτε μέσα στο ψυγείο ληγμένα και αλλοιωμένα τρόφιμα.

6.2 Προστασία των πλαστικών επιφανειών

Αν χυθεί λάδι στις πλαστικές επιφάνειες μπορεί να προκληθεί ζημιά στην επιφάνεια και πρέπει να καθαρίζονται άμεσα με χλιαρό νερό.

6.3 Τζάμια πόρτας

- Αυτά τα τζάμια είναι σκληρυμένα για να αυξηθεί η ανθεκτικότητά τους σε κτυπήματα και θραύση.
- Επίσης, στην πίσω επιφάνειά τους έχει εφαρμοστεί μια μεμβράνη ασφαλείας, ως πρόσθετο μέτρο ασφαλείας, για να αποτρέψει την πρόκληση ζημιάς από τα τζάμια στα γύρω αντικείμενα σε περίπτωση θραύσης.
- Αφαιρέστε την προστατευτική μεμβράνη από τα τζάμια.
- Υπάρχει μια επικάλυψη στην επιφάνεια των τζαμιών. Αυτή η επικάλυψη ελαχιστοποιεί τη συσσώρευση λεκέδων και βοηθά να αφαιρούνται εύκολα ενδεχόμενοι λεκέδες και ρύποι. Τα τζάμια που δεν προστατεύονται από τέτοια επικάλυψη μπορεί να υπόκεινται σε επίμονη προσκόλληση οργανικών ή ανόργανων ρύπων βάσης αέρα ή νερού, όπως άλατα σκληρότητας, ανόργανα άλατα, άκαυστους υδρογονάνθρακες, μεταλλικά οξείδια και σιλικόνες, τα οποία μπορούν να προκαλέσουν εύκολα και γρήγορα λεκέδες ή υλική ζημιά. Η διατήρηση της καθαριότητας των τζαμιών γίνεται υπερβολικά δύσκολη παρά τον τακτικό καθαρισμό. Επομένως, υποβαθμίζεται η εμφάνιση και η διαφάνεια του τζαμιού. Οι σκληρές και διαβρωτικές μέθοδοι καθαρισμού και τα παρόμοια καθαριστικά θα επιδεινώσουν αυτά τα προβλήματα και θα επιταχύνουν την υποβάθμιση.
- Για τον τακτικό καθαρισμό πρέπει να χρησιμοποιούνται καθαριστικά προϊόντα βάσης νερού τα οποία δεν είναι αλκαλικά και διαβρωτικά.
- Για τον καθαρισμό πρέπει να χρησιμοποιούνται μη αλκαλικά και μη διαβρωτικά υλικά ώστε να διατηρηθεί για μεγάλο χρονικό διάστημα η ωφέλιμη ζωή αυτής της επικάλυψης.
- Αυτά τα τζάμια είναι σκληρυμένα για να αυξηθεί η ανθεκτικότητά τους σε κτυπήματα και θραύση.
- Επίσης, στην πίσω επιφάνειά τους έχει εφαρμοστεί μια μεμβράνη ασφαλείας, ως πρόσθετο μέτρο ασφαλείας, για να αποτρέψει την πρόκληση ζημιάς από τα τζάμια στα γύρω αντικείμενα σε περίπτωση θραύσης.

- *Το άλκαλι είναι μια βάση η οποία σχηματίζει ιόντα υδροξυλίου (OH^-) όταν διαλύεται σε νερό.
- Τα μέταλλα Li (λίθιο), Na (νάτριο), K (κάλιο), Rb (ρουβίδιο), Cs (καίσιο) και το τεχνητό και ραδιενεργό μέταλλο Fr (φράγκιο) ονομάζονται ΑΛΚΑΛΙΚΑ ΜΕΤΑΛΛΑ.

7 Επίλυση προβλημάτων

Ελέγξτε αυτή τη λίστα πριν απευθυνθείτε στο σέρβις. Αν το κάνετε αυτό θα εξοικονομήσετε χρόνο και χρήματα. Αυτή η λίστα περιλαμβάνει συχνά παράπονα που δεν έχουν σχέση με ελαττωματική εργασία ή υλικά. Ορισμένες λειτουργίες που .αναφέρονται εδώ ίσως να μην έχουν εφαρμογή στο προϊόν σας

Το ψυγείο δεν λειτουργεί.

- Το φις ρευματοληψίας δεν έχει εισαχθεί πλήρως. >>> Συνδέστε το ώστε να εισέλθει πλήρως στην πρίζα.
- Έχει καεί η ασφάλεια που συνδέεται στην πρίζα που τροφοδοτεί το προϊόν ή η γενική ασφάλεια. >>> Ελέγξτε τις ασφάλειες.

Συμπύκνωση στο πλευρικό τοίχωμα του θαλάμου συντήρησης (MULTI ZONE, COOL, CONTROL και FLEXI ZONE).

- Το περιβάλλον είναι πολύ κρύο. >>> Μην εγκαταστήσετε το προϊόν σε περιβάλλον με θερμοκρασία κάτω από -5°C.
- Η πόρτα ανοιγόταν πολύ συχνά >>> Προσέξτε να μην ανοίγετε πολύ συχνά την πόρτα του προϊόντος.
- Το περιβάλλον είναι πολύ υγρό. >>> Μην εγκαταστήσετε το προϊόν σε υγρό περιβάλλον.
- Τρόφιμα που περιέχουν υγρά φυλάσσονται σε ανοικτά δοχεία. >>> Να διατηρείτε τα τρόφιμα που περιέχουν υγρά σε κλειστά δοχεία.
- Η πόρτα του προϊόντος έχει μείνει ανοικτή. >>> Μην κρατάτε την πόρτα του προϊόντος ανοικτή για πολλή ώρα.
- Ο θερμοστάτης έχει ρυθμιστεί σε πολύ χαμηλή θερμοκρασία. >>> Ρυθμίστε το θερμοστάτη σε κατάλληλη θερμοκρασία.

Ο συμπιεστής δεν λειτουργεί.

- Σε περίπτωση αιφνίδιας διακοπής ρεύματος ή αποσύνδεσης του φις ρευματοληψίας από την πρίζα και επανασύνδεσής του, η πίεση αερίου στο ψυκτικό σύστημα του προϊόντος δεν είναι ισορροπημένη, με αποτέλεσμα να ενεργοποιείται η θερμική προστασία του συμπιεστή. Το προϊόν θα αρχίσει πάλι να λειτουργεί μετά από περίπου 6 λεπτά. Αν η λειτουργία του προϊόντος δεν ξεκινήσει πάλι μετά από αυτό το χρονικό διάστημα, απευθυνθείτε στο σέρβις.
- Η απόψυξη είναι ενεργή. >>> Αυτό είναι φυσιολογικό για προϊόν με πλήρως αυτόματη απόψυξη. Η απόψυξη διενεργείται περιοδικά.
- Το προϊόν δεν έχει συνδεθεί στην πρίζα. >>> Βεβαιωθείτε ότι έχει συνδεθεί το καλώδιο ρεύματος.
- Η ρύθμιση θερμοκρασίας είναι λανθασμένη. >>> Επιλέξτε την κατάλληλη ρύθμιση θερμοκρασίας.
- Έγινε διακοπή ρεύματος. >>> Το προϊόν θα συνεχίσει να λειτουργεί κανονικά όταν αποκατασταθεί το ρεύμα.

Ο θόρυβος λειτουργίας του ψυγείου αυξάνεται κατά τη χρήση.

- Η απόδοση λειτουργίας του προϊόντος μπορεί να διαφέρει ανάλογα με τις μεταβολές της θερμοκρασίας περιβάλλοντος. Αυτό είναι φυσιολογικό και δεν αποτελεί δυσλειτουργία.

Το ψυγείο τίθεται σε λειτουργία πολύ συχνά ή όχι για πολύ χρόνο.

- Το νέο προϊόν μπορεί να είναι μεγαλύτερο από το προηγούμενο. Τα μεγαλύτερα προϊόντα θα λειτουργούν για μεγαλύτερη χρονική διάρκεια.
- Η θερμοκρασία του δωματίου μπορεί να είναι υψηλή. >>> Το προϊόν κανονικά θα λειτουργεί για μεγαλύτερα χρονικά διαστήματα για μεγαλύτερη θερμοκρασία δωματίου.
- Το προϊόν μπορεί να έχει συνδεθεί πρόσφατα στην πρίζα ή μπορεί να τοποθετήθηκαν νέα τρόφιμα στο εσωτερικό του. >>> Θα χρειαστεί περισσότερος χρόνος για να φθάσει το προϊόν τη ρυθμισμένη θερμοκρασία όταν έχει συνδεθεί πρόσφατα στην πρίζα ή τοποθετήθηκαν νέα τρόφιμα στο εσωτερικό του. Αυτό είναι φυσιολογικό.
- Μπορεί να τοποθετήθηκαν πρόσφατα μεγάλες ποσότητες θερμών τροφίμων μέσα στο προϊόν. >>> Μην τοποθετείτε μέσα στο προϊόν ζεστά τρόφιμα.
- Οι πόρτες ανοίγονταν συχνά ή διατηρήθηκαν ανοικτές για μεγάλες χρονικές περιόδους. >>> Ο ζεστός αέρας που εισέρχεται στο εσωτερικό του, θα κάνει το προϊόν να λειτουργεί για περισσότερο χρόνο. Μην ανοίγετε τις πόρτες πολύ συχνά.
- Η πόρτα κατάψυξης ή συντήρησης μπορεί να είναι μισάνοιχτη. >>> Ελέγξτε ότι οι πόρτες έχουν κλείσει καλά.
- Το προϊόν μπορεί να έχει ρυθμιστεί σε πολύ χαμηλή θερμοκρασία. >>> Ρυθμίστε τη θερμοκρασία σε υψηλότερη θερμοκρασία και περιμένετε να επιτύχει το προϊόν τη ρυθμισμένη θερμοκρασία.
- Η στεγανοποίηση της πόρτας συντήρησης ή κατάψυξης μπορεί να είναι λερωμένη, φθαρμένη, σπασμένη ή να μην εδράζει σωστά. >>> Καθαρίστε ή αντικαταστήστε τη στεγανοποίηση. Αν η στεγανοποίηση της πόρτας έχει υποστεί ζημιά / φθορά, το προϊόν θα λειτουργεί για μεγαλύτερες περιόδους για να διατηρήσει την τρέχουσα θερμοκρασία.

Η θερμοκρασία κατάψυξης είναι πολύ χαμηλή, αλλά η θερμοκρασία της συντήρησης είναι επαρκής.

- Η θερμοκρασία του θαλάμου κατάψυξης έχει ρυθμιστεί σε πολύ μικρή τιμή. >>> Ρυθμίστε τη θερμοκρασία του θαλάμου κατάψυξης σε υψηλότερη τιμή και ελέγξτε πάλι.

Η θερμοκρασία συντήρησης είναι πολύ χαμηλή, αλλά η θερμοκρασία της κατάψυξης είναι επαρκής.

- Η θερμοκρασία του θαλάμου συντήρησης έχει ρυθμιστεί σε πολύ μικρή τιμή. >>> Ρυθμίστε τη θερμοκρασία του θαλάμου συντήρησης σε υψηλότερη τιμή και ελέγξτε πάλι.

Τα τρόφιμα που φυλάσσονται στα συρτάρια του θαλάμου συντήρησης είναι παγωμένα.

- Η θερμοκρασία του θαλάμου συντήρησης έχει ρυθμιστεί σε πολύ μικρή τιμή. >>> Ρυθμίστε τη θερμοκρασία του θαλάμου κατάψυξης σε υψηλότερη τιμή και ελέγξτε πάλι.

Η θερμοκρασία στη συντήρηση ή κατάψυξης είναι πολύ υψηλή.

- Η θερμοκρασία του θαλάμου συντήρησης έχει ρυθμιστεί σε πολύ υψηλή τιμή. >>> Η ρύθμιση της θερμοκρασίας θαλάμου συντήρησης επηρεάζει τη θερμοκρασία θαλάμου κατάψυξης. Αλλάξτε τη θερμοκρασία του θαλάμου συντήρησης ή κατάψυξης και περιμένετε έως ότου οι αντίστοιχοι θάλαμοι έχουν επιτύχει το ρυθμισμένο επίπεδο θερμοκρασίας.
- Οι πόρτες ανοίγονταν συχνά ή διατηρήθηκαν ανοικτές για μεγάλες χρονικές περιόδους. >>> Μην ανοίγετε τις πόρτες πολύ συχνά.
- Η πόρτα μπορεί να είναι μισάνοιχτη. >>> Κλείστε τελείως την πόρτα.
- Το προϊόν μπορεί να έχει συνδεθεί πρόσφατα στην πρίζα ή μπορεί να τοποθετήθηκαν νέα τρόφιμα στο εσωτερικό του. >>> Αυτό είναι φυσιολογικό. Θα χρειαστεί περισσότερος χρόνος για να φθάσει το προϊόν τη ρυθμισμένη θερμοκρασία όταν έχει συνδεθεί πρόσφατα στην πρίζα ή τοποθετήθηκαν νέα τρόφιμα στο εσωτερικό του.
- Μπορεί να τοποθετήθηκαν πρόσφατα μεγάλες ποσότητες θερμών τροφίμων μέσα στο προϊόν. >>> Μην τοποθετείτε μέσα στο προϊόν ζεστά τρόφιμα.

Ταλάντευση ή θόρυβος

- Το δάπεδο δεν είναι επίπεδο, οριζόντιο και ανθεκτικό. >>> Αν το προϊόν ταλαντεύεται όταν το μετακινείτε αργά, ρυθμίστε τα πόδια για να ισορροπήσετε το προϊόν. Επίσης βεβαιωθείτε ότι το δάπεδο έχει αρκετή φέρουσα ικανότητα ώστε να αντέχει το προϊόν.
- Οποιαδήποτε είδη έχουν τοποθετηθεί πάνω στο προϊόν μπορεί να προκαλέσουν θόρυβο. >>> Αφαιρέστε οποιαδήποτε είδη έχουν τοποθετηθεί πάνω στο προϊόν.

Το προϊόν παράγει θόρυβο ροής ή ψεκασμού υγρού κλπ.

- Οι αρχές λειτουργίας του προϊόντος περιλαμβάνουν ροή υγρού και αερίου. >>> Αυτό είναι φυσιολογικό και δεν αποτελεί δυσλειτουργία.

Ακούγεται φύσημα αέρα από το προϊόν.

- Το προϊόν χρησιμοποιεί έναν ανεμιστήρα για τη διαδικασία ψύξης. Αυτό είναι φυσιολογικό και δεν αποτελεί δυσλειτουργία.

Υπάρχει συμπύκνωση στα εσωτερικά τοιχώματα του προϊόντος.

- Ο θερμός ή υγρός καιρός μπορεί να αυξήσει τη συσσώρευση πάγου και τη συμπύκνωση. Αυτό είναι φυσιολογικό και δεν αποτελεί δυσλειτουργία.
- Οι πόρτες ανοίγονταν συχνά ή διατηρήθηκαν ανοικτές για μεγάλες χρονικές περιόδους. >>> Μην ανοίγετε τις πόρτες πολύ συχνά, αν κάποια πόρτα είναι ανοικτή, κλείστε την.
- Η πόρτα μπορεί να είναι μισάνοιχτη. >>> Κλείστε τελείως την πόρτα.

Υπάρχει συμπύκνωση στα εξωτερικά τοιχώματα του προϊόντος ή ανάμεσα στις πόρτες.

- Ο καιρός μπορεί να είναι υγρός, αυτό είναι πολύ φυσιολογικό σε κρύο καιρό. >>> Η συμπύκνωση θα πάψει όταν μειωθεί η υγρασία.

Δυσοσμία στο εσωτερικό.

- Το προϊόν δεν καθαρίζεται τακτικά. >>> Καθαρίζετε το εσωτερικό τακτικά με σφουγγάρι, χλιαρό νερό και διάλυμα μαγειρικής σόδας σε νερό.
- Ορισμένες συσκευασίες και υλικά συσκευασίας μπορεί να παράγουν οσμές. >>> Χρησιμοποιείτε δοχεία και υλικά συσκευασίας που δεν παράγουν οσμές.
- Τα τρόφιμα τοποθετήθηκαν σε μη σφραγισμένα δοχεία. >>> Να διατηρείτε τα τρόφιμα σε σφραγισμένα δοχεία Από τα μη σφραγισμένα τρόφιμα μπορεί να εξαπλωθούν μικροοργανισμοί και να προκληθούν δυσάρεστες οσμές.
- Απομακρύνετε από το προϊόν τυχόν τρόφιμα που έχουν λήξει ή αλλοιωθεί.

Η πόρτα δεν κλείνει.

- Οι συσκευασίες των τροφίμων μπορεί να εμποδίζουν την πόρτα. >>> Αλλάξτε θέση σε τυχόν είδη που εμποδίζουν τις πόρτες.
- Το προϊόν δεν στέκεται σε τελείως όρθια θέση στο δάπεδο. >>> Ρυθμίστε τα πόδια για να ισορροπήσετε σωστά το προϊόν.
- Το δάπεδο δεν είναι επίπεδο, οριζόντιο και ανθεκτικό. >>> Βεβαιωθείτε ότι το δάπεδο είναι επίπεδο και οριζόντιο και αρκετά ανθεκτικό για το βάρος του προϊόντος.

Το συρτάρι λαχανικών έχει σφηνώσει.

- Τα τρόφιμα μπορεί να έρχονται σε επαφή με το άνω τμήμα του συρταριού. >>> Αναδιοργανώστε τα τρόφιμα μέσα στο συρτάρι.

⚠	**ΠΡΟΕΙΔΟΠΟΙΗΣΗ:** Αν το πρόβλημα επιμένει αφού ακολουθήσετε τις οδηγίες σε αυτή την ενότητα, απευθυνθείτε στο κατάστημα αγοράς ή σε Εξουσιοδοτημένο σέρβις. Μην επιχειρήσετε να επισκευάσετε μόνοι σας το προϊόν.

ΑΠΟΠΟΙΗΣΗ ΕΥΘΥΝΗΣ / ΠΡΟΕΙΔΟΠΟΙΗΣΗ

Ορισμένα (απλά) προβλήματα μπορούν να αντιμετωπιστούν ικανοποιητικά από τον τελικό χρήστη χωρίς να προκύπτει κάποιο πρόβλημα ασφάλειας ή μη ασφαλής χρήση, εφόσον οι διορθωτικές ενέργειες πραγματοποιούνται μέσα στα όρια και σύμφωνα με τις οδηγίες που ακολουθούν (δείτε την ενότητα "Εξ ιδίων επισκευή").
Επομένως, εκτός αν επιτρέπεται διαφορετικά στην παρακάτω ενότητα "Εξ ιδίων επισκευή", οι επισκευές θα πρέπει να ανατίθενται σε αναγνωρισμένους επαγγελματίες τεχνικούς επισκευών, ώστε να αποφεύγονται προβλήματα με την ασφάλεια. Ένας αναγνωρισμένος επαγγελματίας τεχνικός επισκευών είναι ένας επαγγελματίας τεχνικός επισκευών στον οποίο έχει δοθεί από τον κατασκευαστή πρόσβαση στις οδηγίες και στη λίστα ανταλλακτικών του προϊόντος σύμφωνα με τις μεθόδους που περιγράφονται σε νομοθετικές πράξεις με βάση την Οδηγία 2009/125/ΕΚ.
Ωστόσο, μόνο ο εκπρόσωπος σέρβις (δηλ. εξουσιοδοτημένοι επαγγελματίες τεχνικοί επισκευών) με τον οποίο μπορείτε να επικοινωνήσετε μέσω του αριθμού τηλεφώνου που αναφέρεται στο εγχειρίδιο χρήσης/στην κάρτα εγγύησης ή μέσω του τοπικού σας εξουσιοδοτημένου καταστήματος μπορεί να παρέχει σέρβις σύμφωνα με τους όρους της εγγύησης. Επομένως, έχετε υπόψη σας ότι οι επισκευές από επαγγελματίες τεχνικούς επισκευών (οι οποίοι δεν είναι εξουσιοδοτημένοι από τη Grundig) θα καταστήσουν άκυρη την εγγύηση.

Εξ ιδίων επισκευή

Εξ ιδίων επισκευή μπορεί να γίνει από τον τελικό χρήστη σε σχέση με τα εξής ανταλλακτικά: λαβές πόρτας,
μεντεσέδες πόρτας, δίσκους, καλάθια, και στεγανοποιήσεις πόρτας (μια ενημερωμένη λίστα είναι διαθέσιμη και στο support.grundig.com από 1η Μαρτίου 2021).

Επιπλέον, για τη διασφάλιση της ασφάλειας των προϊόντων και για την αποτροπή κινδύνου σοβαρού τραυματισμού, η αναφερθείσα εξ ιδίων επισκευή θα γίνεται με τήρηση των οδηγιών στο εγχειρίδιο χρήστη σχετικά με την εξ ιδίων επισκευή ή των οδηγιών που είναι διαθέσιμες στο support.grundig.com Για την ασφάλειά σας, αποσυνδέστε από την πρίζα το προϊόν πριν επιχειρήσετε οποιαδήποτε εξ ιδίων επισκευή.
Επισκευή και προσπάθειες επισκευής από τελικούς χρήστες για εξαρτήματα που δεν περιλαμβάνονται σε μια τέτοια λίστα και/ή χωρίς τήρηση των οδηγιών στα εγχειρίδια χρήστη για εξ ιδίων επισκευή ή οι οποίες είναι διαθέσιμες στο support.grundig.com, μπορεί να δημιουργήσουν προβλήματα ασφάλειας που δεν μπορούν να αποδοθούν στη Grundig, και θα ακυρώσουν την εγγύηση του προϊόντος Επομένως, συνιστάται θερμά οι τελικοί χρήστες να απέχουν από προσπάθειες διενέργειας επισκευών που δεν εμπίπτουν στην αναφερθείσα λίστα ανταλλακτικών, απευθυνόμενοι σε αυτές τις περιπτώσεις σε εξουσιοδοτημένους επαγγελματίες τεχνικούς επισκευών ή σε αναγνωρισμένους επαγγελματίες τεχνικούς επισκευών. Αντιθέτως, τέτοιου είδους προσπάθειες από τελικούς χρήστες μπορεί να προκαλέσουν προβλήματα ασφάλειας και να προξενήσουν ζημιά στο προϊόν και συνεπώς να προκαλέσουν πυρκαγιά, πλημμύρα, ηλεκτροπληξία και σοβαρό τραυματισμό.
Για παράδειγμα, αλλά χωρίς περιορισμό σε αυτές, οι ακόλουθες επισκευές πρέπει να ανατίθενται σε εξουσιοδοτημένους επαγγελματίες τεχνικούς επισκευών ή σε αναγνωρισμένους επαγγελματίες τεχνικούς επισκευών: συμπιεστής, ψυκτικό κύκλωμα, κύρια πλακέτα,πλακέτα αντιστροφέα, πλακέτα οθόνης κλπ.
Ο κατασκευαστής/πωλητής δεν μπορεί να θεωρηθεί υπεύθυνος σε καμία περίπτωση μη συμμόρφωσης των τελικών χρηστών με τα οριζόμενα παραπάνω.

Ο χρόνος διαθεσιμότητας ανταλλακτικών για το ψυγείου ψυγείου σας ανέρχεται σε 10 έτη.
Στη διάρκεια αυτής της περιόδου, θα υπάρχουν διαθέσιμα γνήσια ανταλλακτικά για τη σωστή λειτουργία του ψυγείου.
Η ελάχιστη διάρκεια της εγγύησης του ψυγείου που προμηθευτήκατε είναι 24 μήνες.
Αυτό το προϊόν είναι εξοπλισμένο με φωτεινή πηγή ενεργειακής κλάσης «G».
Η φωτεινή πηγή στο προϊόν αυτό θα πρέπει να αντικαθίσταται μόνο από επαγγελματίες επισκευαστές.

Notes

Notes