MITSUBISHI ELECTRIC

HOME REFRIGERATORS

SERVICE MANUAL

2021

NO. SM-RE-2112

Revised-C : Some descriptions have been modified in page no.25,26,28,30,32,34 ; 17/08/22 date

Models

MR-CX328ER-W-A
MR-CX328ER-ST-A
MR-CX328ER-OB-A
MR-CX328ER-BST-A
MR-CX328ERL-W-A
MR-CX328ERL-ST-A

MR-CX363ER-W-A
MR-CX363ER-ST-A
MR-CX363ER-OB-A
MR-CX363ER-BST-A
MR-CX363ERL-W-A
MR-CX363ERL-ST-A

CONTENTS

1. SPECIFICATIONS..... 1
2. OUTLINES AND DIMENSIONS..... 4
3. WIRING DIAGRAM..... 6
4. REFRIGERANT CIRCUIT..... 8
5. NAME OF THE PARTS..... 9
6. TROUBLE SHOOTING..... 10
   6.1 TROUBLE CRITERION OF MAIN PARTS..... 10
   6.2 FUNCTION OF OPERATION PANEL..... 13
   6.3 FLOW CHART OF SELF CHECK..... 14
   6.4 TEST POINT DIAGRAM OF MAIN CONTROL BOARD.... 19
7. DISASSEMBLY INSTRUCTIONS..... 20
8.PARTS LIST..... 25

A.....Australia & New Zealand

8 PARTS LIST

DOOR, BODY PARTS

MR-CX328ER-A MR-CX328ERL-A
MR-CX363ER-A MR-CX363ERL-A

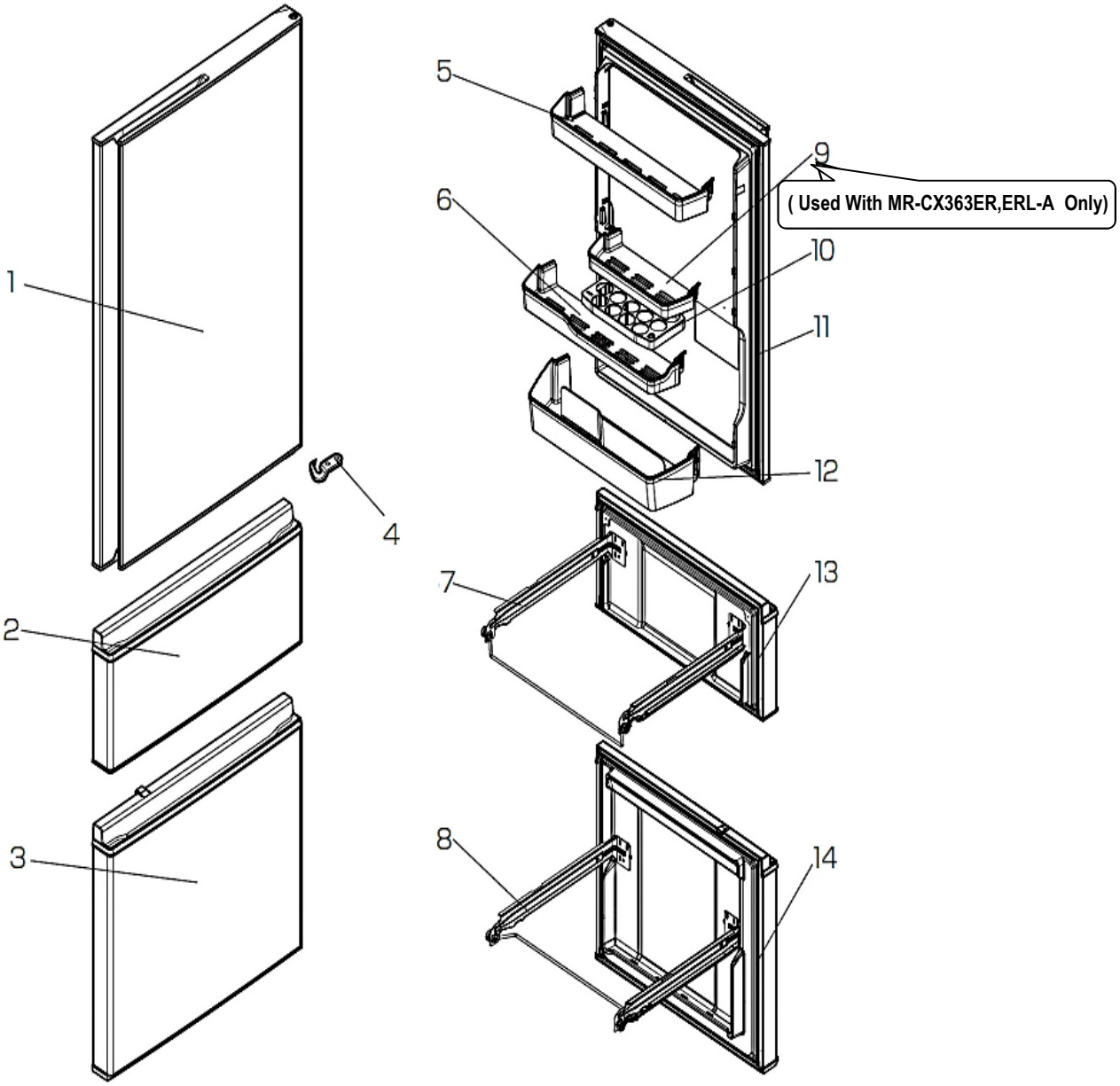

BODY PARTS

MR-CX328ER-A MR-CX328ERL-A
MR-CX363ER-A MR-CX363ERL-A

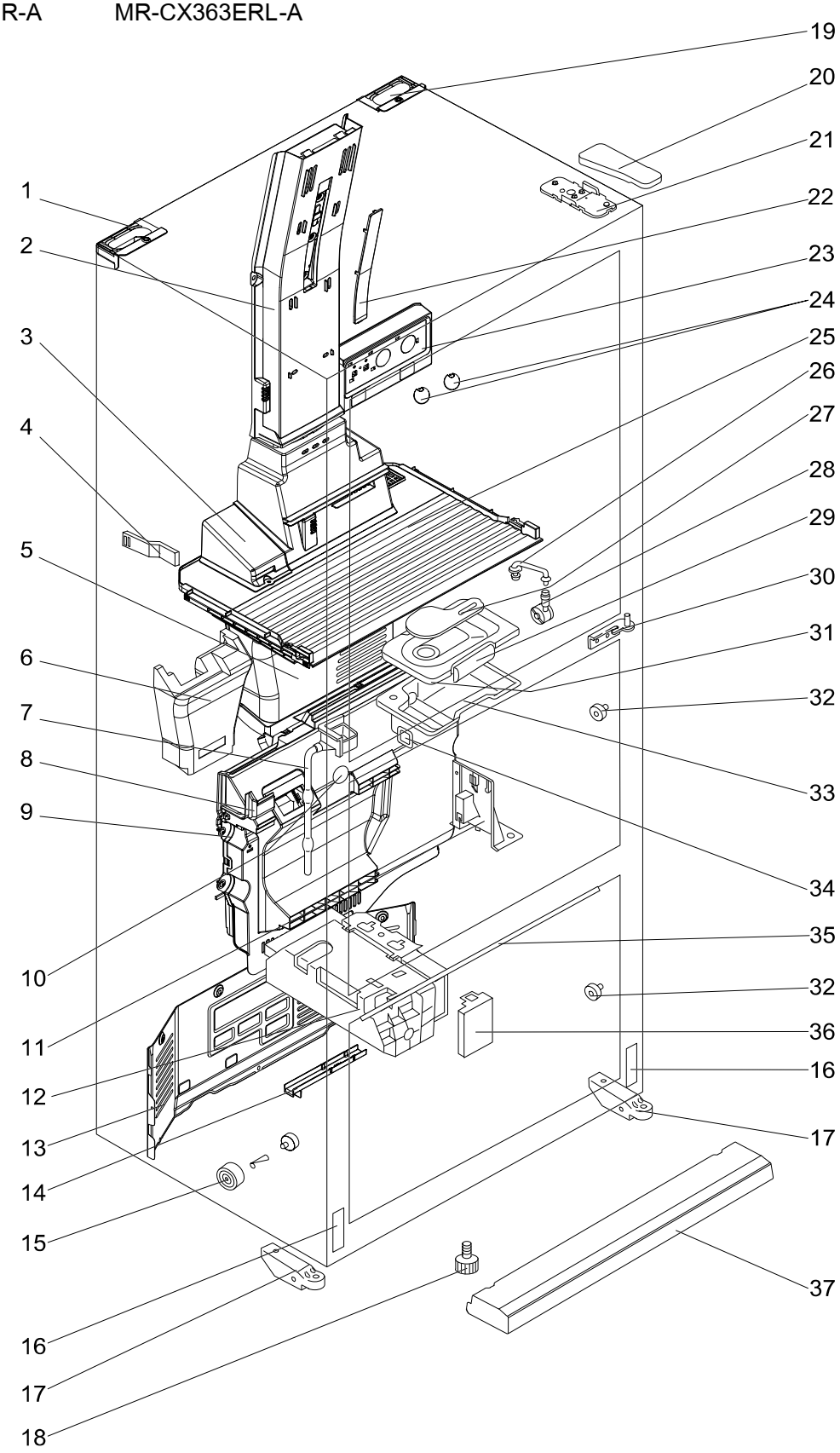

ELECTRICIAL PARTS

MR-CX328ER-A MR-CX328ERL-A
MR-CX363ER-A MR-CX363ERL-A

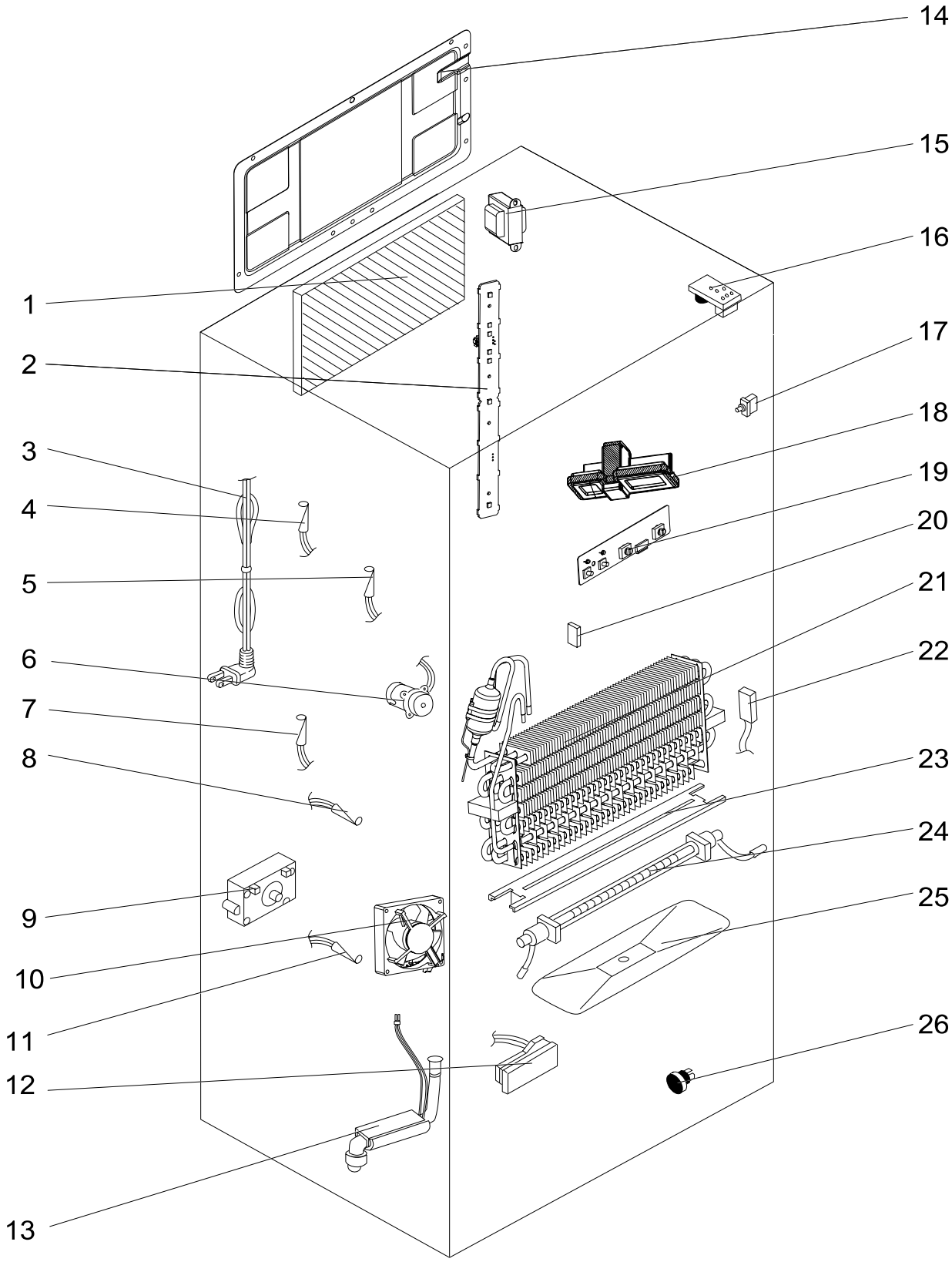

ACCESSORY AND UNIT PARTS

MR-CX328ER-A MR-CX328ERL-A
MR-CX363ER-A MR-CX363ERL-A

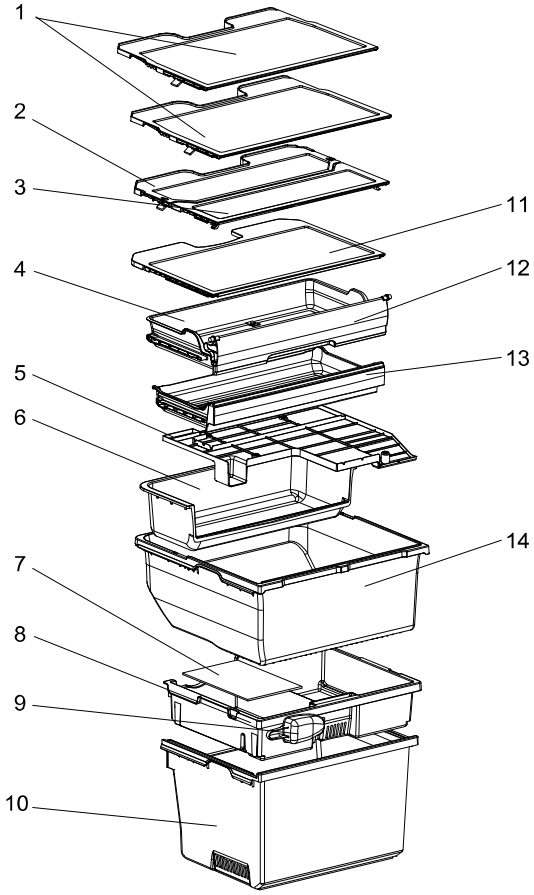

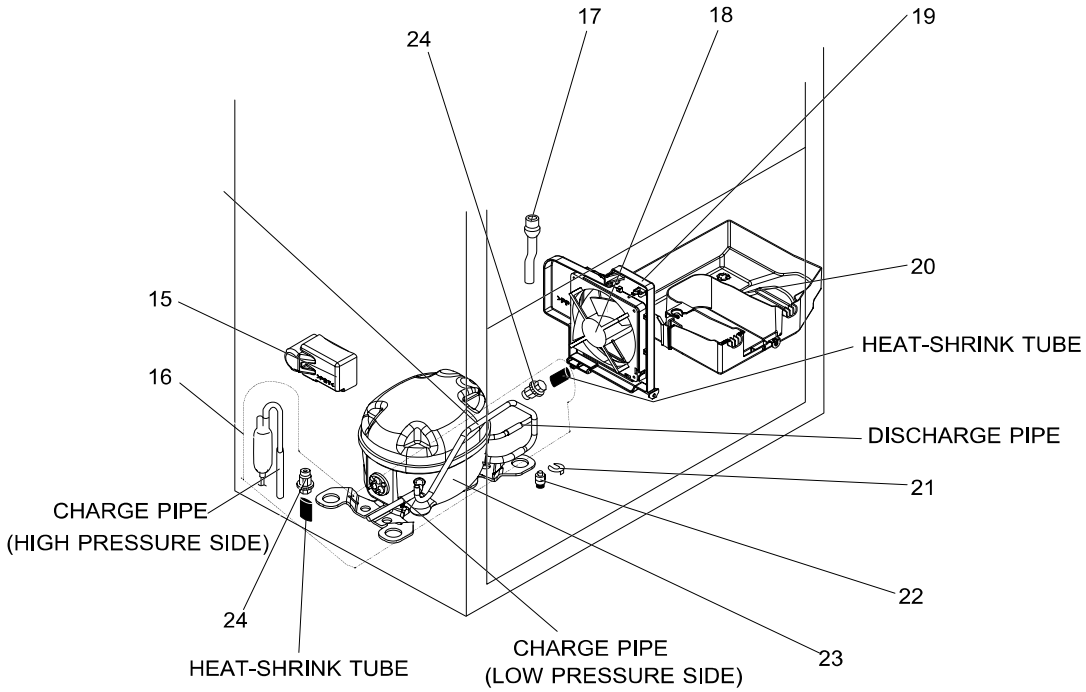

KANG YONG ELECTRIC PUBLIC COMPANY LIMITED.

67 Moo 11, Bangna-Trad Road Km.20, Bangplee, Samutprakarn 10540 Thailand.

TEL : 0-2337-2900 FAX : 0-2337-2954

http://www.mitsubishi-kye.com

e-mail: information@kye.meap.com

Printing Date : Nov 2021