Hisense
life reimagined

EN (GB) (IE)

INSTRUCTIONS FOR USE

OF AN UPRIGHT FRIDGE FREEZER

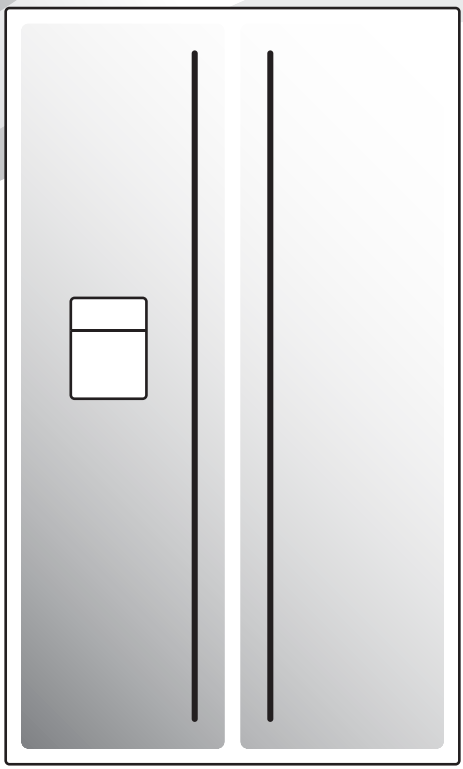

THANK YOU FOR WELCOMING OUR APPLIANCE INTO YOUR HOME

We are happy that you have chosen a Hisense appliance. Hisense is here to empower you and all your adventures with our cutting-edge technology and modern home appliances made of high-quality materials. Because we are working tirelessly on energy efficiency, by purchasing our appliance, you too are contributing to more sustainable future.

For full use of our services, warranty and other important information, please consider to register your Hisense appliance online on our website:

https://www.hisense-europe.com

We hope our appliance will meet and exceed your expectations.

Link to the EU EPREL database

The QR code on the energy label supplied with the appliance provides a web link to the registration of this appliance in the EU EPREL database. Keep the energy label for reference together with the user manual and all other documents provided with this appliance. It is possible to find information related to the performance of the product in the EU EPREL database using the link https://eprel.ec.europa.eu and the model name and product number that you can find on the rating plate of the appliance. For more detailed information about the energy label, visit www.theenergylabel.eu.

The appliance is intended solely for household use.

The refrigerator is intended for storing fresh food at temperatures above 0°C.

The freezer is intended for freezing fresh food and for long-term storage of frozen food (up to one year, depending on the type of food).

The following symbols are used throughout the manual and they have the following meanings:

INFORMATION!
Information, advice, tip, or recommendation

WARNING!
Warning – general danger

ELECTRIC SHOCK!
Warning – danger of electric shock

DANGER OF FIRE!
Warning – danger of fire

Contents

Important notes and precautions 5
Before using the appliance for the first time 5
Important safety instructions 5
Important information on the use of appliance 7

Advice for saving power with refrigeration appliances 9

Installation and connection 10
Selecting the room 10
Appliance placement 11
Connecting the appliance 13

Description of the appliance 14

Operating the appliance 15
Switching the appliance on/off 15
Adjusting the temperature in the appliance 16
Intensive freezing (freezer compartment) 17
Intensive cooling (refrigerator compartment) 17
Ice maker/cold water dispenser operation 18
Eco function(Recommended setting) 19
Holiday mode (prolonged absence) 19
Water storage tank alarm 19
Open door alarm 20
Child Lock 20

Appliance interior equipment 21
Shelves 21
Fruit and vegetables drawer (CrispZone) * 21
Door racks 21
Air distribution system (MultiFlow) * 21
Water storage tank 22
Icemaker/cold water dispenser 22

Storing food in the refrigerator 26
Important warnings regarding food storage 26
Avoid contamination of food 26

Freezing and storing frozen food 27
Freezing procedure 27
Important warnings on freezing 27
Storing industrially frozen food 27
Frozen food storage time 27
Thawing frozen food 28

Defrosting the appliance 29
Automatic refrigerator defrosting 29
Defrosting a NoFrost freezer 29

Cleaning the appliance 30

Troubleshooting 31

Information about appliance noise 34

Environment protection **35**

Spare parts **36**

Important notes and precautions

Before using the appliance for the first time

Before connecting the appliance to the power mains, please read carefully the instructions for use which describe the appliance and its correct and safe use. The instructions apply to several appliance types/models; thus, settings or equipment may be described herein which is not available in your appliance. We recommend saving this instruction manual for future reference and attach it to the appliance if it is sold in the future.

Check for any damage or irregularities on your appliance. If you find your appliance is damaged, notify the retailer from which you have purchased the appliance.

Before connecting the appliance to the power mains, let the appliance rest in a vertical position for a minimum of 2 hours. This will reduce the possibility of operation faults due to the effect of transport on the cooling system.

Important safety instructions



DANGER OF FIRE!

WARNING! Risk of fire/flammable materials.

The appliance must be connected to the power mains and grounded in compliance with the effective standards and regulations.

WARNING! Do not locate multiple portable socket-outlets or portable power supplies at the rear of the appliance.

Before cleaning the appliance, unplug it from the power mains (unplug the power cord from the wall outlet).



ELECTRIC SHOCK!

WARNING! If the supply cord is damaged, it must be replaced by the manufacturer, its service agent or similarly qualified persons in order to avoid a hazard.



ELECTRIC SHOCK!

WARNING! When positioning the appliance, ensure the supply cord is not trapped or damaged.



ELECTRIC SHOCK!

If LED lighting does not work, call a service technician. Do not attempt a repair of the LED lighting yourself, as there is danger of contact with high voltage!



WARNING!

WARNING! Do not use electrical appliances inside the food storage compartments of the appliance, unless they are of the type recommended by the manufacturer.

WARNING!

WARNING! Do not use mechanical devices or other means to accelerate the defrosting process, other than those recommended by the manufacturer.

WARNING!

WARNING! To avoid any hazard resulting from poor stability of the appliance, make sure it is installed as instructed.

Freeze burn hazard

To avoid freeze burn, never put frozen food in your mouth and do not touch frozen food.

Safety of children and vulnerable persons

The appliance is not intended for use by persons (including children) with reduced physical, sensory or mental capabilities, or lack of experience and knowledge, unless they have been given supervision or instruction concerning use of the appliance by a person responsible for their safety.

Children should be supervised to ensure that they do not play with the appliance.

Cleaning and user maintenance shall not be made by children without supervision.

Remove the packaging intended to protect the appliance or particular parts during transport and keep it outside the reach of children. It presents danger of injury or suffocation.

When removing a used appliance, disconnect the power cord, remove the door, and leave the shelves in the appliance. This will prevent children from locking themselves in the appliance.

For European markets only

This appliance can be used by children aged from 8 years and above and persons with reduced physical, sensory or mental capabilities or lack of experience and knowledge if they have been given supervision or instruction concerning use of the appliance in a safe way and understand the hazards involved.

Children shall not play with the appliance.

Cleaning and user maintenance shall not be made by children without supervision.

Children aged from 3 to 8 years are allowed to load and unload refrigerating appliances.

Warning regarding the refrigerant

The appliance contains a small amount of an environmentally friendly yet flammable gas R600a. Make sure that no parts of the cooling system are damaged. A gas leak is not hazardous to the environment, but it could cause eye injury or fire.

In case of a gas leak, ventilate the room thoroughly, disconnect the appliance from the power mains, and call a service technician.

Important information on the use of appliance

WARNING! This appliance is intended to be used in household and similar applications such as:

- staff kitchen areas in shops, offices and other working environments;
- farm houses and by clients in hotels, motels and other residential type environments;
- bed and breakfast type environments;
- catering and similar non-retail applications.

⚠ **WARNING!**
WARNING! Keep ventilation openings, in the appliance enclosure or in the built-in structure, clear of obstruction.

The appliance may not be used outdoors and it may not be exposed to rain.

Do not store explosive substances such as aerosol cans with a flammable propellant in this appliance.

If the appliance will be out of use for an extended period of time, switch it off using the relevant button, and unplug it from the power mains. Empty the appliance, defrost it, clean it, and leave the door ajar.

In case of an error or power supply failure, do not open the freezer compartment unless the freezer has not operated for over 16 hours. After this period, use the frozen food or provide sufficient cooling (e.g. a replacement appliance).

Technical information on the appliance

Rating plate can be found in the appliance interior. It indicates data on voltage, gross and net volume, type and amount of refrigerant, and information on the climate classes.

If the language on the rating plate is not the language of your choice or the language of your country, replace it with the one supplied.

WARNING!

WARNING! Do not damage the refrigerant circuit.

Advice for saving power with refrigeration appliances

- Install the appliance as specified in the instruction manual.
- Do not open the door more often than necessary.
- Occasionally make sure air circulation underneath the appliance is unobstructed.
- If the gasket is damaged or does not provide a perfect seal for any reason, have it replaced as soon as possible.
- Store the food in tightly sealed containers or appropriate packaging.
- Before placing the food in the refrigerator, allow it to cool down to room temperature.
- Defrost frozen food in the refrigerator compartment.
- To make use of the entire freezer compartment interior volume, remove some of the drawers as described in the instruction manual.
- Defrost your conventional freezer when an approximately 3–5 millimetre layer of frost or ice has built up on the refrigerated surfaces.
- Make sure the layout of shelves in the compartment is uniform and that the food is placed so that the air can freely circulate in the appliance interior (observe the recommended placement of food as described in the instructions).
- In appliances with a fan, do not block the fan slots or vents.
- If you do not need the fan or the ionizer, switch them off to reduce power consumption.

Installation and connection

Selecting the room

- Install the appliance in a dry and well ventilated room. The appliance will operate correctly if the environment temperature is in the interval specified in the table. The appliance class is indicated on the rating plate / label with the basic information on the appliance.

Description	Class	Ambient temperature range °C	Relative humidity
Extended temperate	SN	+10 to +32	≤75%
Temperate	N	+16 to +32	
Subtropical	ST	+16 to +38	
Tropical	T	+16 to +43	

INFORMATION!
This appliance is not intended to be used as a build-in appliance.

INFORMATION!
Do not place an appliance in a room where temperature can drop to below 5 °C as this may cause abnormal appliance operation or failure!

- After the installation, the appliance mains plug should be accessible!
- Do not place the appliance near appliances or devices radiating heat, such as a cooker, a stove, a radiator, water heater etc., and do not expose it to direct sunlight. The appliance should stand at least 3 cm away from an electric or gas cooker or at least 30 cm away from an oil or solid fuel stove. If the distance between such source of heat and the appliance is smaller, use an insulating panel.

Appliance placement

Appliance installation should be carried out by at least two persons to avoid any personal injury or damage to the appliance.

- The appliance is intended for free-standing installation. To reach the rated/minimum power consumption, always provide 50 mm of clearance between the wall and the back of the appliance, and 100 mm above the appliance. Also allow adequate air circulation on either side of the appliance and above it.
- The appliance can also be placed adjacent to or between kitchen cabinets or cupboards, or adjacent to a wall. In case of such placement, the appliance will operate flawlessly; however, power consumption could increase. Observe the minimum clearance above and behind the appliance, as indicated in the figure.
- Take into account the space or clearance required to open the appliance door, in order to allow the drawers and shelves to be pulled out or removed (see installation diagram).

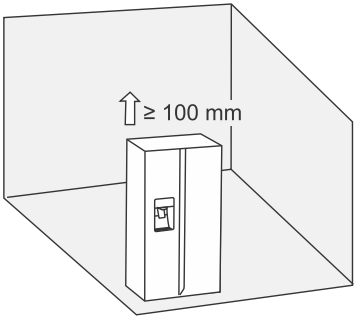

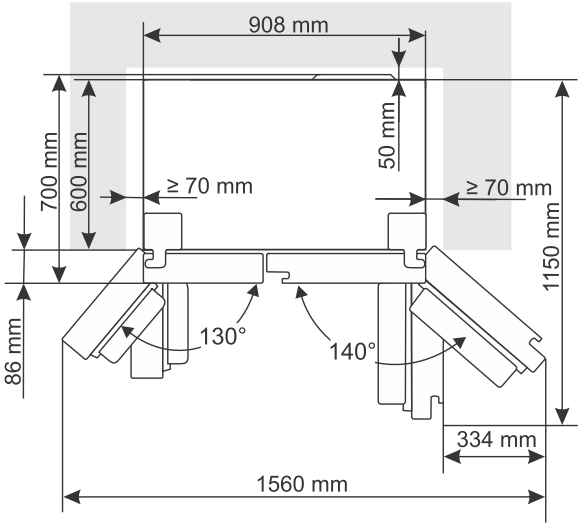

Appliance setup

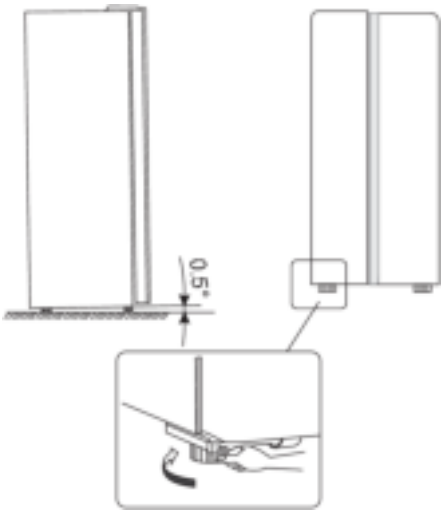

- To ensure that the appliance will stand horizontally and that sufficient air circulation is provided behind the appliance, the feet at the bottom of the appliance may need to be adjusted. The height of the feet can be adjusted with your fingers or using an appropriate wrench.
- Allow the door to close automatically. Then turn the adjustable feet so that the upper part of the appliance is tilted backwards by about 10 mm or by 0.5°.
- When you want to move the appliance, raise the feet again so that the appliance can move freely on rotating rollers. After moving the appliance to the desired position, re-align it.

WARNING!
Attention! Use the rotating rollers only to move the appliance forward and backward, as they do not function as wheels. If you push the appliance to one side or the other, it can damage the floor and the rollers.

Adjusting the appliance door

If you find that the door of the appliance is not completely aligned (that the door of the freezer compartment and the refrigerator compartment are not at the same level), you can use the supplied tool to adjust the height of the door.

If the freezer door is higher than the refrigerator door. First, use the supplied tool to turn the screw on the lower hinge counterclockwise to raise the door. Then fix the nut with a screwdriver.

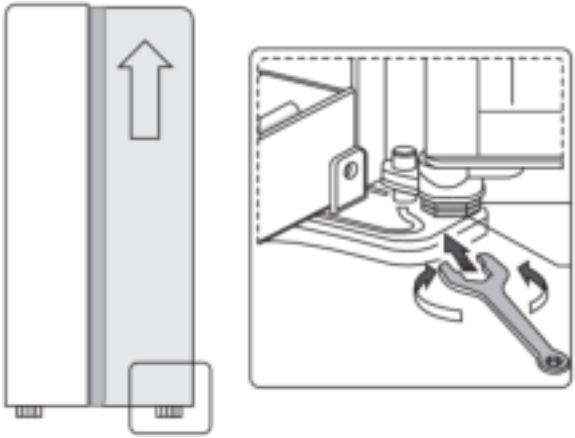

Connecting the appliance

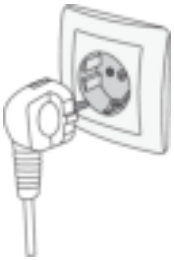

- Connect the appliance to the power mains using the power cord. The wall outlet should be fitted with a ground contact (safety socket). Nominal voltage and frequency are indicated on the rating plate/label with basic information on the appliance.
- The appliance must be connected to the power mains and grounded in compliance with the effective standards and regulations. The appliance will withstand short-term deviations from the nominal voltage, but not more than +/- 6%.

Description of the appliance

Appliance interior equipment may change according to the appliance model.

This product contains a light source of energy efficiency class G.

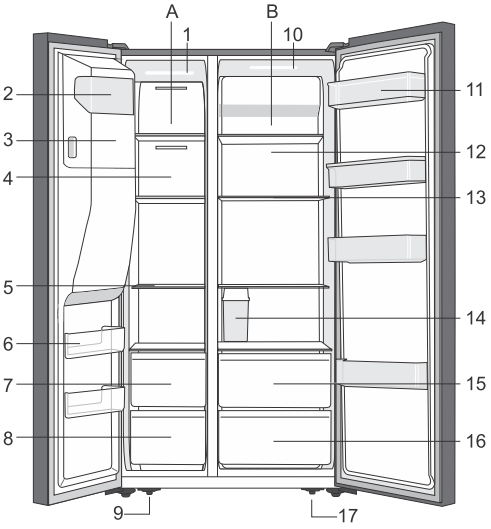

A Freezer

1. LED light in the freezer compartment
2. Icemaker front cover
3. Ice tray
4. Freezer air circulation duct cover
5. Freezer shelf
6. Freezer door shelf
7. Top freezer drawer
8. Bottom freezer drawer
9. Left adjustable foot at the bottom of the appliance

B Refrigerator

10. LED light in the refrigeration compartment
11. Refrigerator door shelf
12. Refrigerator air circulation duct cover
13. Refrigerator shelf
14. Water storage tank
15. Top refrigerator drawer
16. Bottom refrigerator drawer
17. Right adjustable foot at the bottom of the appliance

NOTE!

Due to occasional changes to our products, it is possible that your refrigerator will differ slightly from the refrigerator described in these instructions for use, but its functions and methods of use remain the same.

Operating the appliance

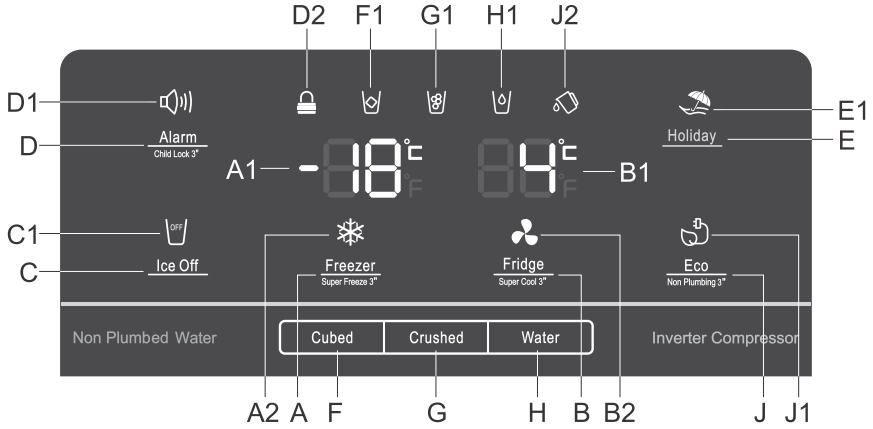

A Freezer compartment temperature setting key and intensive freezing on/off key
A1 Freezer compartment set temperature display
A2 Intensive freezing (fast freeze) function indicator
B Refrigerator compartment temperature setting key and intensive cooling on/off key
B1 Refrigerator compartment temperature display
B2 Intensive cooling (super cool) function indicator
C Icemaker on/off key
C1 Icemaker operation indicator (when the symbol C1 is on, icemaker is switched off)
D Alarm off and child lock on/off key (child lock)
D1 Alarm operation indicator
D2 Child lock operation indicator
E Long absence on/off key (holiday mode)
E1 Long absence function indicator (holiday mode)
F Key for making ice cubes
F1 Ice cube making indicator
G Key for making crushed ice
G1 Crushed ice making indicator
H Cold water supply key
H1 Cold water filling indicator
J Eco function on/off key (eco mode) and water storage tank alarm off key
J1 Eco function indicator (eco mode)
J2 Water storage tank alarm indicator

Switching the appliance on/off



Power on: To switch on the appliance, plug the power cord into the power mains outlet.

Power off: To switch off the appliance, unplug the power cord from the power mains outlet.

Adjusting the temperature in the appliance

INFORMATION!

- Appliance temperature is preset at the factory to the recommended setting, i.e. 4°C for the refrigerator compartment and -18°C for the freezer compartment.
- After the appliance is switched on, it may take several hours for the set temperature to be reached. Do not place any food into the refrigerator before the temperature drops to the selected setting.

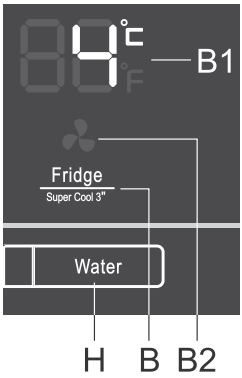

The temperature in **the refrigerator compartment** can be set with the **B** key. Press the **B** key until the **B1** display shows the desired temperature.

- The temperature in the refrigerator compartment can be set in the range from +2 °C to + 8 °C.
- Each time you press the **B** key you reduce the setting by 1 °C. After three seconds of inactivity, the setting is automatically saved as the last set temperature of the refrigerator compartment.
- Recommended temperature setting is 4°C.

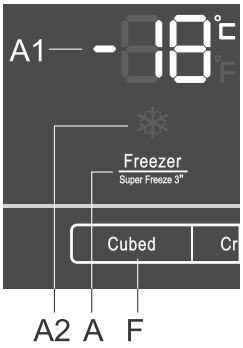

The temperature in **the freezer compartment** can be set with the **A** key. Press the **A** key until the **A1** display shows the desired temperature.

- The temperature in the freezer compartment can be set in the range from -14°C to -24°C.
- Each time you press the **A** key you reduce the setting by 1 °C. After three seconds of inactivity, the setting is automatically saved as the last set temperature of the freezer compartment.
- Recommended temperature setting is -18°C.

Intensive freezing (freezer compartment) (❄)

- Use this setting after switching on the appliance for the first time, before cleaning, or before inserting a large amount of food.

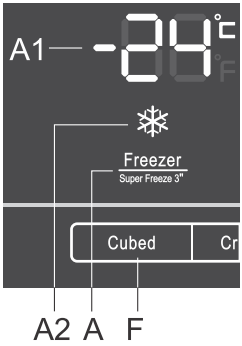

Power on: switch on the intensive freezing by long pressing (3 seconds) the **A** key. The display will show **A2** and indicate the value **-24 °C**.

Power off: switch off the intensive freezing by long pressing (3 seconds) the **A** key again.

If the setting is not deactivated manually, it will be deactivated automatically (after about a day). The setting returns to the last saved state.

INFORMATION!

- When the intensive freezing (fast freeze) function is activated, the appliance will operate with maximum power. During this time, operation may be temporarily somewhat louder.

INFORMATION!

- When the intensive freezing (super freeze) function is activated, temperature may be lower both in the refrigerator and the freezer compartment.

Intensive cooling (refrigerator compartment) (🌀)

INFORMATION!

Use this setting after switching on the appliance for the first time, before cleaning, or before inserting a large amount of food.

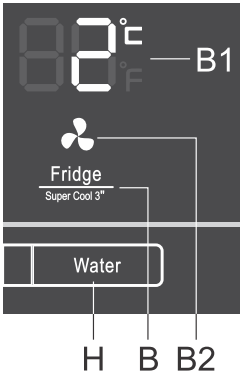

Power on: switch on the intensive cooling by long pressing (3 seconds) the **B** key. The display will show **B2** and indicate the value **2 °C**.

Power off: switch off the intensive cooling by long pressing (3 seconds) the **B** key again.

If the setting is not deactivated manually, it will be deactivated automatically (after about three hours). The setting returns to the last saved state.

Ice maker/cold water dispenser operation

INFORMATION!

- When you open the freezer door or when the child lock is switched on, the device will not work.

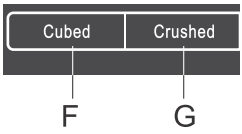

You have two options for making ice:

- Ice cubes: press **F**. The following symbol will light up .
- Crushed ice: press **G**. The following symbol will light up .

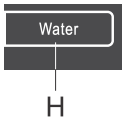

If you need cold water, press **H**. The following symbol will light up .

Switching the icemaker on/off

If you do not need ice, turn off this function to save water and electricity.



Power on: Switch on the icemaker by pressing **C**. The symbol **C1** will not be displayed.



Power off: Switch off the icemaker by pressing **C**. The following symbol will light up **C1**.

INFORMATION!
When the following symbol is displayed **C1**, ice making will be disabled, but you can still dose the ice that is already made in the ice bucket, and you can still pour cold water by pressing **H.**

Eco function ( ) (Recommended setting)

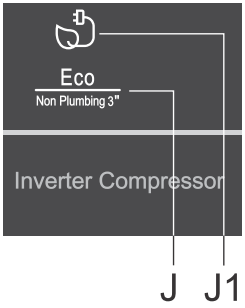

Power on: turn on the **Eco** function by pressing **J**. The display will show **J1**.

Power off: the **Eco** function can be switched off by pressing the **J** key again until the symbol **J1** goes out.

The **Eco** function will also be deactivated when you change the refrigerator or freezer compartment temperature setting, or when you activate any of the other extra functions.

Holiday mode (prolonged absence)

Use this function when you are away for a long period of time, for example when you are going on holiday or taking a long business trip.



Power on: turn on the function by pressing **E**. The display will show **E1**.

- When this function is activated, the refrigerator compartment temperature will be set to 15°C and the freezer compartment temperature will be set to -18°C.

WARNING!
Before activating this function, empty the refrigerator compartment, as any perishables left in this compartment may spoil.

Power off: turn off the function by pressing the **E** key again until the symbol **E1** goes out.

Water storage tank alarm

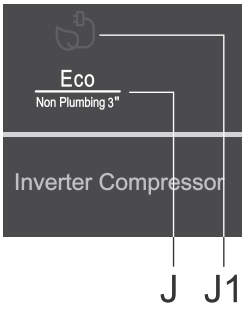

If the water storage tank is not installed correctly or if it is not installed at all, the following symbol lights up .

Switching off the alarm:

- You can turn off the alarm by pressing **J** and holding it for 3 seconds.

Open door alarm



If the door is open for too long, an acoustic alarm (repetitive beep) will be activated and the following symbol will light up **D1**. The beep will continue sounding for 10 minutes, at a rate of three times per minute.

Switching off the alarm: Turn off the acoustic alarm by closing the door. The symbol **D1** will remain lit until you turn it off by pressing **D**.

INFORMATION!
If you leave the door open for more than 10 minutes, the alarm will no longer be sounded. Appliance operation will switch to safe mode in order to provide sufficient cooling and prevent food spoilage despite the open door.

Child Lock



Power on: activate the child lock by long pressing (3 seconds) **D**, until the display shows .

This function locks the entire control panel, including the icemaker/cold water dispenser.

Power off: to deactivate the function, press the key again for a long time **D**.

In the event of a power failure, the function is not preserved.

Appliance interior equipment

(* Equipment depends on the model)

Shelves

Empty shelves can be rearranged as you see fit across the guides in the appliance interior without having to remove them from the appliance. To move or remove a shelf from the appliance, pull it towards you, lift it up at the front and then move or pull it out of the appliance. Store quickly perishable food at the back of the shelf where the temperature is the lowest.

Fruit and vegetables drawer (CrispZone) *

The drawers at the bottom of the refrigerator are meant for storing fruits and vegetables. They provide humidity and prevent the food from drying out.

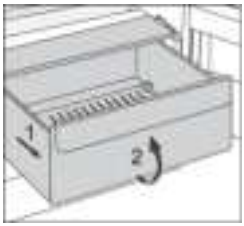

- Pulling out the bin:
  - Pull out the bin as far as it will go. Then, lift the front part and pull it out completely.

Door racks

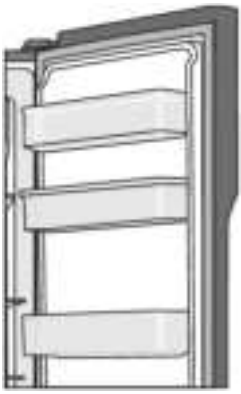

The inside of the door of the refrigerator and freezer compartment is equipped with shelves designed for storing small packages.

You may lay out the racks as desired by lifting them slightly from the grooves that hold them in place and moving them to the desired spot, making sure to fit them in the grooves there.

The lower shelf on the door of the refrigerator compartment is designed for storing bottles.

Maximum load on each door shelf is 5 kg.

Air distribution system (MultiFlow) *

- Advanced MultiFlow system evenly distributes the air and equalizes the temperature throughout the refrigerator. This system also allows placing any type of food on any shelf in the fridge, as there are not temperature differences between them.

Water storage tank

Water for the icemaker and the cold water dispenser is stored in the water storage tank. To add water to the water storage tank, follow these instructions:

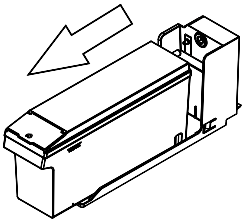

Pull out the water storage tank.

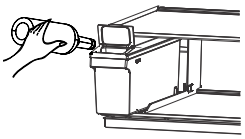

Lift the small cap on the front, then pour water directly into the storage tank.

WARNING!
Only pour drinking water into the water storage tank.

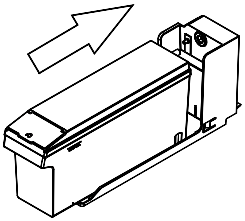

Reinstall the water storage tank on the refrigerator shelf.

Icemaker/cold water dispenser

By pressing **"cubed"** (ice cubes), **"crushed"** (crushed ice) or **"water"**, you can choose whether ice (and in what form) or cold water comes from the dispenser.

After selecting the type of ice, gently press on the lever of the dispenser with a cup or glass. Ice will come out of the appliance. Make sure that the cup or glass is pressed against the machine so that the ice falls into it.

INFORMATION!

- If you select ice cubes after the crushed ice function has been selected, an even smaller amount of the remaining crushed ice may fall into the cup or glass.
- Do not remove the cup or glass from under the dispenser as soon as you have poured the desired amount of water or obtained the desired amount of ice. Wait another 2 to 3 seconds to prevent spillage.
- The water from the dispenser is cold, not ice cold. If you want cooler water with ice, first pour ice into the glass and then fill it with water from the machine.

WARNING!

- Do not pull out the lever as this may damage or break the lever spring.
- To prevent the ice shredder motor from overheating, do not dose the ice for longer than one minute during normal use.

Using the ice bucket

To remove the ice bucket: please grab the handle as shown in the figure below. Then lift it up and slowly pull it out to prevent any injuries.

Removing the ice bucket:

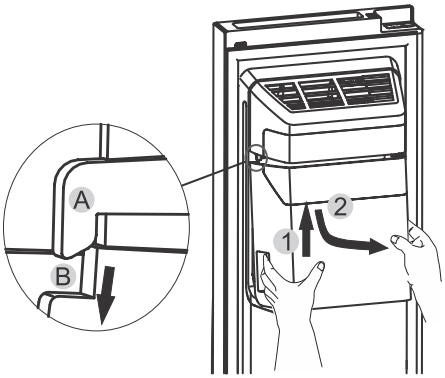

1. Lift the ice bucket.
2. Slowly pull out the ice bucket.

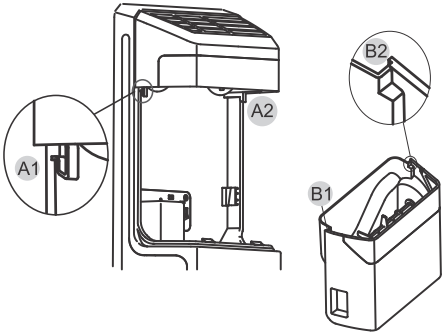

When returning the ice bucket to its place, make sure that the two side grooves (A1 and B1) on the ice bucket lock into the couplings (A1 and A2).

Installing the ice bucket:

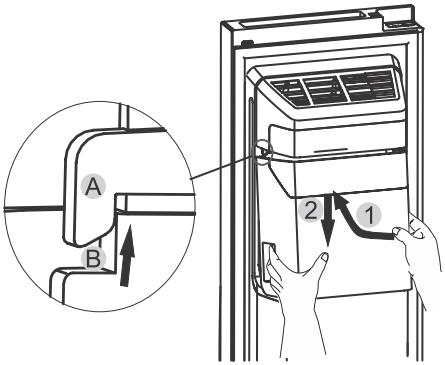

1. Push the ice bucket upwards and make sure that the two side grooves (B1 and B2) on the ice bucket lock into the couplings (A1 and A2).
2. Pull the ice bucket downwards and make sure it sits firmly in the holder.

INFORMATION!

- When the icemaker drops ice cubes into the bucket, all the sounds you hear are part of normal operation.
- If you do not remove the ice from the bucket for a long time, the cubes may stick together. In this case, please remove all the ice and empty the bucket.
- If the refrigerator is switched off for too long, the ice in the bucket will melt and water from the refrigerator may flow from the refrigerator to the floor. To prevent this, remove all ice from the bucket.
- If you cannot remove the ice from the bucket, check if the ice is stuck in the chute and remove it if necessary. You can also pull out the ice bucket to check if multiple ice cubes have stuck together and remove them.
- The first quantity of ice cubes produced after installation will be smaller, as there is still air in the water hoses. During normal use, this air will be expelled from the hose.
- Wash the ice bucket with a mild detergent, then rinse and dry thoroughly. Do not use harsh or abrasive cleaners or solvents.

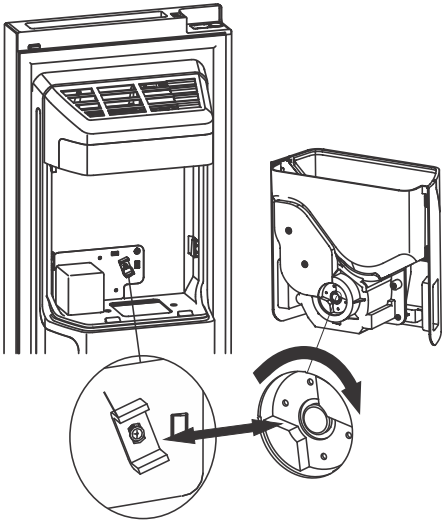

Before reinstalling the ice bucket, please check that the couplings are at the correct angle to fit each other. If not, move the ice bucket coupling to such an angle that it will match the motor coupling.

WARNING!

- Do not insert fingers, hands, or any unsuitable objects into the chute or ice bucket, as this may result in injury or property damage.
- Do not allow children to climb the icemaker/cold water dispenser or pull on the ice bucket, as this may result in injury.

Storing food in the refrigerator

Important warnings regarding food storage

INFORMATION!

Correct use of the appliance, appropriate packaging, maintaining the right temperature, and observing the food hygiene standards have a decisive impact on the quality of food storage.

Observe the expiry dates for the food, indicated on the packaging.

Food stored in the refrigerator should be kept in closed containers or in appropriate packaging to prevent it from emitting or receiving odours and humidity.

Do not store inflammable, volatile, and explosive substances in the refrigerator.

Bottles with high alcohol content should be tightly sealed and stored in an upright position.

Some organic solutions, essential oils in lemon and orange peel, butter acid, etc. may damage the plastic surfaces in case of a prolonged contact, causing damage and premature ageing of these materials.

Unpleasant odour warns of lacking cleanliness of the appliance or perished contents (see chapter Cleaning the Appliance).

If you are leaving home for a longer period of time, remove perishables from the refrigerator.

Avoid contamination of food

To avoid contamination of food, please respect the following instructions:

- Opening the door for long periods can cause a significant increase of the temperature in the compartments of the appliance.
- Regularly clean surfaces that can come in contact with food and accessible drainage systems.
- Store raw meat and fish in suitable containers in the refrigerator, so that it is not in contact with or drip onto other food.
- If the refrigerating appliance is left empty for long periods, switch off, defrost, clean, dry, and leave the door open to prevent mould developing within the appliance.

Freezing and storing frozen food

Freezing procedure

INFORMATION!
Maximum amount of fresh food that may be inserted at once is specified on the appliance rating plate. If the amount of food to be frozen exceeds the indicated amount, the quality of freezing will be inferior; in addition, the quality of the food already frozen will deteriorate.

- Activate the super freeze function 24 hours before freezing fresh food:
  - by long pressing (3 seconds) Freezer / Super Freeze 3* , until the following symbol lights up ❄ .
- Then you can put fresh food in the freezer area.

Make sure the fresh food is not in contact with the food that is already frozen.

- When freezing smaller amounts of food (1-2 kilograms), activating the super freeze function is not required.

Important warnings on freezing

INFORMATION!
Only use the freezer to freeze food appropriate for freezing. Always use quality and fresh food.

Select the most suitable packaging for the food and use the packaging correctly.

Make sure the packaging is air and water tight so that the food does not dry out and loose its vitamins.

Indicate the type of food, amount, and date of freezing on the packaging.

It is important that the food freezes quickly. Therefore, smaller packages are recommended. Refrigerate the food before freezing.

Storing industrially frozen food

- When storing and using frozen food, observe the manufacturer's instructions. Temperature and expiry date are indicated on the packaging.
- Only choose food with undamaged packaging, stored in freezers at temperatures of –18 °C or lower.
- Do not purchase food covered in frost as this indicates it has been partly thawed several times and that it is of inferior quality.
- Protect the food from thawing during transport. In case of an increase in temperature, storage time will be shorter and quality will deteriorate.

Frozen food storage time

Recommended storage time in the freezer

Type of food	Storage life
Fruit, beef	from 10 to 12 months
Vegetables, veal, poultry	from 8 to 10 months
Venison	from 6 to 8 months

Table continued from last page

Type of food	Storage life
Pork	from 4 to 6 months
Finely chopped or minced meat	4 months
Bread, pastas, cooked dishes, whitefish	3 months
Offal	2 months
Smoked sausage, bluefish	1 month

Thawing frozen food

- Thawing is an important step in storing food preserved by freezing. Food must be thawed in the correct way.
- Suitable methods of thawing food are:
  - in the refrigerator;
  - in cold water;
  - in a microwave or conventional oven with a suitable thaw program.
- Some frozen products can be prepared without needing to thaw them first. The manufacturer will state this on the packaging.
- The food needs to be packed in small portions. In this way the food thaws faster.
- Use partially or completely thawed food as quickly as possible. The bacteria in thawed food are reactivated and the food will spoil rapidly. This applies in particular to fruit, vegetables and ready-made food.
- Do not refreeze partially or completely thawed food.

Defrosting the appliance

Automatic refrigerator defrosting

Refrigerator does not need defrosting because the ice on the back interior wall is thawed automatically. Any accumulated ice will melt when the compressor unit is inactive. Drops will flow through an opening in the refrigerator rear wall into a tray fitted above the compressor, from where they will evaporate.

Make sure the opening in the back wall in the refrigerator interior is never blocked by food or any other object.

If an excessive layer of ice is formed on the rear wall of refrigerator interior (3–5 mm), switch off the appliance and defrost the appliance manually.

Defrosting a NoFrost freezer

- The NoFrost freezer will defrost automatically. Any frost layer that may build up occasionally will disappear automatically.

Cleaning the appliance

WARNING!
Before cleaning, unplug the appliance from the mains - unplug the appliance and remove the connection cable from the socket.

- Use a soft cloth to clean all surfaces. Cleaners that contain abrasive substances, acids, or solvents are not suitable for cleaning as they may damage the surface.

Clean the appliance exterior with water or a mild solution of suds.

Lacquer-coated and aluminium surfaces may be cleaned with lukewarm water to which you have added a mild detergent. Use of cleaners with low alcohol content is allowed (e.g. window cleaners). Do not use cleaners containing alcohol for cleaning plastic materials.

Appliance interior can be cleaned with lukewarm water to which you can add some vinegar.

- Do not wash the parts of appliance interior equipment in a dishwasher as they may be damaged.
- Frost or ice build-up, 3–5 mm thick, will increase power consumption. Therefore, it should be regularly removed (does not apply to NO FROST freezers). Do not use any sharp objects, solvents, or sprays.
- After cleaning, switch the appliance back on and insert the food.

Troubleshooting

Problem:	Cause or remedy:
Appliance is connected to the power mains but it does not work.	• Make sure there is voltage in the power outlet and that the appliance is switched on.
Cooling system operates continuously for a long period of time:	• Too high environment temperature. • Door opened too frequently or too long. • Door not closed correctly (possible impurities on the seal, misaligned door, damaged seal etc.). • Too much fresh food inserted at once. • The sensor in the refrigerator is blocked by fresh food. Allow air to circulate around the sensor (only some models have it).
Excessive build-up of ice on the back wall of refrigerator interior can be a result of the following:	• door opened too frequently or too long. • Warm food placed in the refrigerator. • Food or containers in contact with the back interior wall of the refrigerator. • Poor door sealing. • If the seal is dirty or damaged, clean or replace it.
Build-up of ice or frost in the freezer interior:	• The door has been opened for too long or too frequently. • The door is not properly closed. • The door has a poor seal (the gasket is dirty, the door is not properly aligned, the gasket is damaged etc.). • Manually defrost the appliance.
Condensate (dew) on the shelf above the drawers:	• This is transient phenomenon which cannot be entirely avoided in periods of high environment temperature and humidity. It subsides when temperature and humidity are normalized. We recommend cleaning the drawers more frequently and wiping the droplets occasionally. • Open the humidity control slider. • Put food in bags or other packaging with a good seal.
Droplets on the refrigerator compartment back wall.	• This is normal. The refrigerator compartment is defrosted automatically, which results in droplets of water that flows through an opening in the refrigerator compartment back wall into a tray above the compressor unit, from which it evaporates.
Water is dripping/leaking from the refrigerator:	• Clogged water discharge opening or water dripping past the water gutter. • Clean the blocked opening, e.g. using a plastic straw. • If a thick layer of ice builds up, defrost the appliance manually (see Defrosting the Appliance).

Table continued from last page

Problem:	Cause or remedy:
Door is difficult to open:	• If you are trying to open the freezer door after just having closed it, this could be difficult to do. As you open the door, some cool air escapes from the appliance and it is replaced by warm air from the environment. When this air is cooled, negative pressure is generated which results in problems as you try to open the door. After a few minutes, the condition is normalized and the door can be easily opened again.
Appliance sides are warm:	• This is normal. There are pipes and tubes installed in the appliance sides, which tend to heat up during appliance operation.
LED lighting does not work:	• If LED lighting does not work, call a service technician. • Do not attempt a repair of the LED lighting yourself, as there is danger of contact with high voltage!
Ec or Er appears on the display unit:	• The touch keys do not respond. Call a service centre for repair. • Until the appliance is repaired by a service technician, the appliance will operate in safe mode. The appliance will automatically preserve the most suitable temperature for each compartment.
E0 will appear on the display unit:	• The humidity and ambient temperature sensor is defective. Call a service centre to fix the problem. The appliance will operate in safe mode until it is repaired by a service technician. The appliance will automatically maintain the most suitable temperature for each compartment.
E1 will appear on the display unit:	• The temperature sensor of the refrigerator is defective. Call a service centre to fix the problem. The appliance will operate in safe mode until it is repaired by a service technician. The appliance will automatically maintain the most suitable temperature for each compartment.
E3 appears on the display unit:	• The temperature sensor of the freezer is malfunctioning. Call a service centre to fix the problem. The appliance will operate in safe mode until it is repaired by a service technician. The appliance will automatically maintain the most suitable temperature for each compartment.
E4 appears on the display unit:	• Evaporator sensor is defective. Call a service center to fix the problem. The appliance will operate in safe mode until it is repaired by a service technician. The appliance will automatically maintain the most suitable temperature for each compartment.

Table continued from last page

Problem:	Cause or remedy:
E9 appears on the display unit:	• The temperature sensor of the icemaker is defective. Call a service centre to fix the problem. The appliance will operate in safe mode until it is repaired by a service technician. The appliance will automatically maintain the most suitable temperature for each compartment.
Eb will appear on the display unit:	• The icemaker is defective. Call a service centre to fix the problem.

If the above tips do not resolve your problem, call the nearest authorized service centre and state the type, model, and serial number indicated on the appliance rating plate or label located in the appliance interior.

Information about appliance noise

Cooling in refrigerator freezers is made possible by a cooling system that also includes a compressor (and a fan with some appliances), which generates some noise. The level of noise depends on installation, proper use, and age of the appliance.

- After connecting the appliance to the power mains, compressor operation, or the sound of flowing liquid, may be somewhat louder. This is not a sign of malfunction and it will not affect the useful life of the appliance. In time, appliance operation and this noise will become quieter.
- Sometimes, unusual or loud noises may appear during appliance operation; these are mostly the result of improper installation:
  - The appliance must stand level and stable on a solid base.
  - The appliance may not be in contact with a wall or adjacent furniture.
  - Make sure the interior equipment sits firmly in its place and that the noise is not caused by rattling cans, bottles or other containers placed next to each other.
- Due to the higher workload on the cooling system when the door is opened more frequently or for a longer time, when a large amount of fresh food is introduced or when intensive freezing or cooling functions are activated, the appliance can temporarily generate more noise.

Environment protection

Packaging is made of environmentally friendly materials that can be recycled, disposed of, or destroyed without any hazard to the environment.

Removing an obsolete appliance

To protect the environment, take the obsolete appliance to an authorized home appliance collection centre.

Before doing so, do the following:

- disconnect the appliance from the power mains;
- do not allow children to play with the appliance.



The symbol on the product or its packaging indicates that the product should not be treated as normal household waste. The product should be taken to an authorized collection centre for waste electric and electronic equipment processing. Correct disposal of the product will help prevent any negative effects on the environment and health of people which could occur in case of incorrect product removal. For detailed information on removal and processing of the product, please contact the relevant municipal body in charge of waste management, your waste disposal service, or the store where you bought the product.

Spare parts

Spare parts for the appliance you have purchased are available for 10 years. During this time, original spare parts will be available to ensure the correct operation of your appliance.

The list of spare parts is available on the website:

https://partners.gorenje.com/GSD/gsd_public.aspx

Your notes

Your notes

Your notes

Hisense UK Ltd
Ground floor, Munroe Court, White Rose Office Park,
Millshaw Park Lane, Leeds LS11 0EA

Hisense France SAS
Bâtiment Front Office12 à 16 rue Sarah Bernhardt
92600 ASNIERES-SUR-SEINE

Hisense Gorenje Germany GmbH
Parkring 31-33,85748 Garching b. München, Deutschland

Hisense Italia SRL
Via Montefeltro, 6/A 20156 Milano,Italia

Hisense Iberia SLU
C/ Botiguers, nº 5, Edificio B, 2ª planta
(46988) Paterna (Valencia-Spain)

GORENJE GOSPODINJSKI APARATI, d.o.o.
Partizanska cesta 12, SI-3320 Velenje, Slovenia

Hisense

922406-a3