USER GUIDE & SERVICE MANUAL



Model: UHFZ124-IS01A

USER GUIDE & SERVICE MANUAL

Click on any section below to jump directly there

Table of Contents

Intro

Safety

- Safety and Warning
- Disposal And Recycling

Installation

- Environmental Requirements
- Electrical
- Cutout & Product Dimensions
- Side by Side Installation
- Anti-Tip Bracket
- General Installation
- Integrated Panel Dimensions
- Integrated Panel Installation
- Grille Installation
- Door Swing
- Door Adjust
- Interior Adjustments

Maintenance

- Free Standing Kit
- Cleaning
- Cleaning Condenser
- Extended Non-Use

Operating Instructions

- First Use
- Control Operation
- Airflow and Product Loading

Service

- Troubleshooting
- Wire Diagram
- Product Liability
- Parts
- System Diagnosis Guide
- Compressor Specifications
- Troubleshooting Extended
- Control Operation - Service
- Thermistor
- Defrost
- Remove Fan and Cover
- Warranty

WELCOME TO U-LINE

Congratulations on your U-Line purchase! Our products are focused on functionality, style, and inspired innovations — paying close attention to even the smallest details. Applications include residential, outdoor, ADA height compliant, marine, and commercial. Product categories include Beverage Centers, Wine Refrigerators, Ice Machines, Refrigerators, Freezers, and Dispensers. Our advanced refrigeration systems, large and flexible capacities, and clean integrated look are what makes our products Built-In to Stand Out®. Since 2014, U-Line has been part of the Middleby family of brands.

U-Line — RIGHT PRODUCT. RIGHT PLACE. RIGHT TEMPERATURE.®

PRODUCT INFORMATION

Looking for additional information on your product? User Guides, Spec Sheets, CAD Drawings, and Product Warranty information are available digitally on u-line.com.

PROPERTY DAMAGE / INJURY CONCERNS

In the unlikely event property damage or personal injury is suspected related to a U-Line product, please take the following steps:

1. U-Line Customer Care must be contacted immediately at +1.414.354.0300.
2. Service or repairs performed on the unit without prior written approval from U-Line is not permitted. If the unit has been altered or repaired in the field without prior written approval from U-Line, claims will not be eligible.

GENERAL INQUIRIES

U-Line Corporation
8900 N. 55th Street
Milwaukee, Wisconsin 53223 USA
Monday - Friday 8:00 am to 4:30 pm CST
T: +1.414.354.0300
Email: sales@u-line.com
u-line.com

SERVICE & PARTS ASSISTANCE

Monday - Friday 8:00 am to 4:30 pm CST
T: +1.414.354.0300
Service Email: onlineservice@u-line.com
Parts Email: onlineparts@u-line.com

CONNECT WITH US AT MIDDLEBY REFRIGERATION

Safety and Warning

NOTICE
Please read all instructions before installing, operating, or servicing the appliance.

Use this appliance for its intended purpose only and follow these general precautions with those listed throughout this guide:

SAFETY ALERT DEFINITIONS

Throughout this guide are safety items labeled with a Danger, Warning, or Caution based on the risk type:

⚠ DANGER

Danger means that failure to follow this safety statement will result in severe personal injury or death.

⚠ WARNING

Warning means that failure to follow this safety statement could result in serious personal injury or death.

⚠ CAUTION

Caution means that failure to follow this safety statement may result in minor or moderate personal injury, property, or equipment damage.

⚠ DANGER

This unit contains R600a (Isobutane) which is a flammable hydrocarbon. It is safe for regular use. Do not use sharp objects to expedite defrosting. Do not service without consulting the "R600a specifications" section included in the User Guide. Do not damage the refrigerant circuit.

⚠ WARNING

Service must be done by factory authorized service personnel. Any parts shall be replaced with like components. Failure to comply could increase the risk of possible ignition due to incorrect parts or improper service.

CALIFORNIA PROPOSITION 65

This product contains chemicals known to the state of California to cause cancer and birth defects or other reproductive harm.

www.P65warnings.CA.gov

⚠ CAUTION

This equipment is to be installed with adequate backflow protection to comply with applicable federal, state and local codes.

Disposal and Recycling

⚠ DANGER

RISK OF CHILD ENTRAPMENT. Before you throw away your old refrigerator or freezer, take off the doors and leave shelves in place so children may not easily climb inside.

If the unit is being removed from service for disposal, check and obey all federal, state, and local regulations regarding the disposal and recycling of refrigeration appliances, and follow these steps completely:

1. Remove all consumable contents from the unit.

2. Unplug the electrical cord from its socket.

3. Remove the door(s)/drawer(s).

Environmental Requirements

This model is intended for indoor/interior applications only and is not to be used in installations that are open/ exposed to natural elements.

This unit is designed to operate between 50°F (10°C) and 100°F (38°C). Higher ambient temperatures may reduce the unit's ability to reach low temperatures and/or reduce ice production on applicable models.

For best performance, keep the unit out of direct sunlight and away from heat generating equipment.

In climates where high humidity and dew points are present, condensation may appear on outside surfaces. This is considered normal. The condensation will evaporate when the humidity drops.

⚠ CAUTION

Damages caused by ambient temperatures of 40°F (4°C) or below are not covered by the warranty.

Electrical

⚠ WARNING

SHOCK HAZARD — Electrical Grounding Required. Never attempt to repair or perform maintenance on the unit until the electricity has been disconnected.

Never remove the round grounding prong from the plug and never use a two-prong grounding adapter.

Altering, cutting or removing power cord, removing power plug, or direct wiring can cause serious injury, fire, loss of property and/or life, and will void the warranty.

Never use an extension cord to connect power to the unit.

Always keep your working area dry.

NOTICE

Electrical installation must observe all state and local codes. This unit requires connection to a grounded (three-prong), polarized receptacle that has been placed by a qualified electrician.

The unit requires a grounded and polarized 115 VAC, 60 Hz, 15A power supply (normal household current). An individual, properly grounded branch circuit or circuit breaker is recommended. A GFCI (ground fault circuit interrupter) is usually not required for fixed location appliances and is not recommended for your unit because it could be prone to nuisance tripping. However, be sure to consult your local codes.

See CUTOUT & PRODUCT DIMENSIONS for recommended receptacle location.

Cutout & Product Dimensions

PREPARE SITE

Your U-Line product has been designed for either free-standing or built-in installation. When built-in, your unit does not require additional air space for top, sides, or rear. However, the front grille must NOT be obstructed, and clearance is required for an electrical connection in the rear.

⚠ CAUTION

Unit can NOT be installed behind a closed cabinet door.

CUTOUT DIMENSIONS

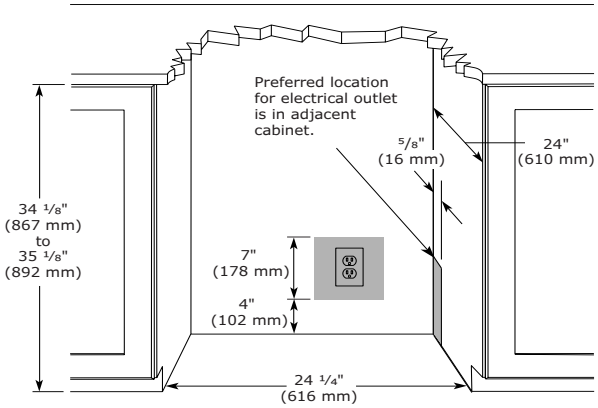

PRODUCT DIMENSIONS

REAR

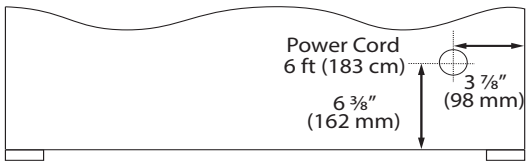

FRONT

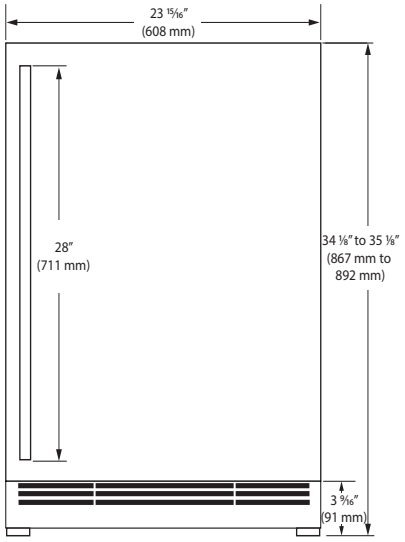

TOP

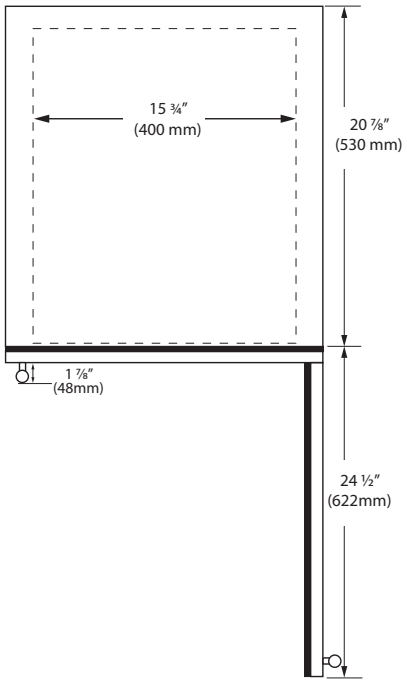

SIDE

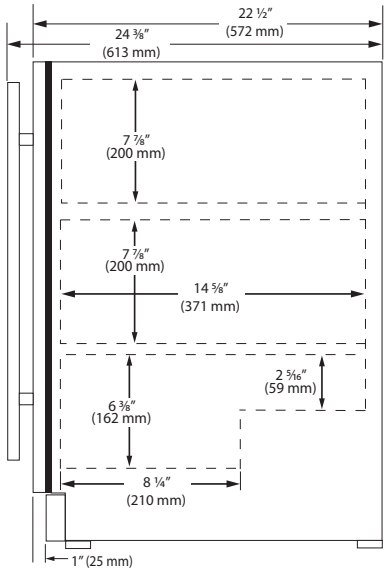

Side-by-Side Installation

Two units may be installed side-by-side.

Cutout width for a side-by-side installation is the cutout dimension of a single unit times two.

No trim kit is required. However, 1/4" (6 mm) of space needs to be maintained between the units to ensure unobstructed door swing.

Units must operate from separate, properly grounded electrical receptacles placed according to each unit's electrical specifications requirements.

Side-by-Side Installation with Bracket

1. Slide both units out so screws on top of units are easily accessible.

2. Remove screws as shown below.

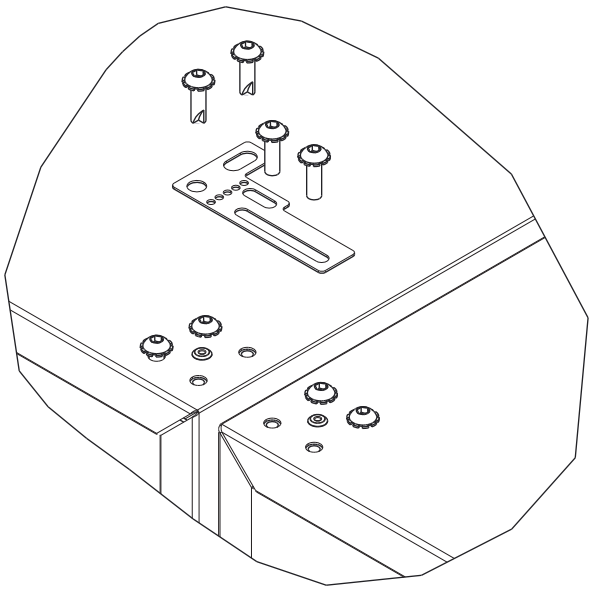

3. Place bracket over holes and attach to unit with two screws removed in step 2 using a T-25 Torx driver. Tighten screws fully.

4. Gently push units into position. Be careful not to entangle the electrical cord or water line, if applicable.

5. Re-check the leveling, from front to back and side to side. Make any necessary adjustments. The unit's top surface should be approximately 1/8" (3 mm) below the countertop.

Anti-Tip Bracket

1. Slide unit out so screws on top of unit are easily accessible.

2. Remove the two screws from the opposite side of the hinge assembly using a T-25 Torx driver (see below).

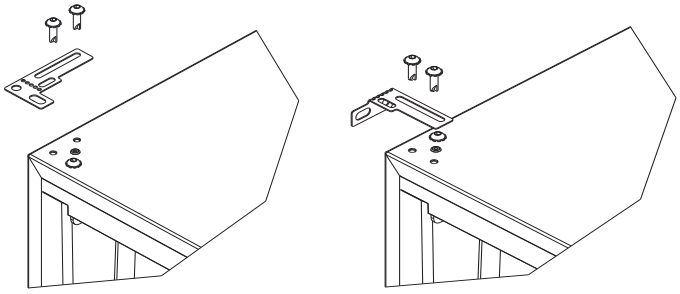

3. Place bracket over holes and attach to unit with two screws removed in step 2 using a T-25 Torx driver. Tighten screws fully.

4. Gently push unit into position. Be careful not to entangle the electrical cord or water line, if applicable.

5. Check to be sure the unit is level from front to back and side to side. Make any necessary adjustments. The unit's top surface should be approximately ⅛" (3 mm) below the countertop.

6. Secure bracket into adjoining surface.

General Installation

LEVELING INFORMATION

1. Use a level to confirm the unit is level. Level should be placed along top edge and side edge as shown.

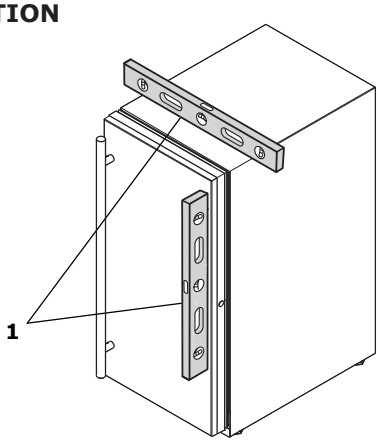

2. If the unit is not level, adjust the legs on the corners of the unit as necessary.

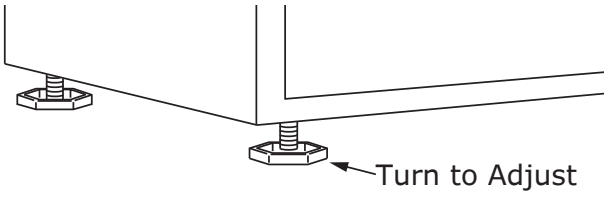

3. Confirm the unit is level after each adjustment and repeat the previous steps as needed.

INSTALLATION TIP

If the room floor is higher than the floor in the cutout opening, adjust the rear legs to achieve a total unit rear height of 1⁄8″ (3 mm) less than opening's rear height. Shorten the unit height in the front by adjusting the front legs. This allows the unit to be gently tipped into the opening. Readjust the front legs to level the unit after it is correctly positioned in the opening.

INSTALLATION

1. Plug in the power/electrical cord.
2. Gently push the unit into position. Be careful not to entangle the cord or water and drain lines, if applicable.
3. Re-check the leveling, from front to back and side to side. Make any necessary adjustments. The unit's top surface should be approximately 1⁄8″ (3 mm) below the countertop.
4. Install the anti-tip bracket.
5. Remove interior packing material and wipe out the inside of the unit with a clean, water-dampened cloth.

Integrated Panel Dimensions

INTEGRATED PANEL

NOTICE

Due to differences in surrounding cabinetry the panel may not perfectly align with door. The procedure below is designed to provide a finished integrated panel that seamlessly integrates with surrounding cabinetry.

The door panel must not weigh more than 20 lbs (10 kg).

It is important to ensure that all drilled holes are drilled to the correct depth in order to avoid splits in the wood when hardware is installed.

When applying an integrated panel to a unit, ensure that both sides are finished in order to prevent warping. In some panel installations, the panel may be visible through the glass while the door is open.

A full integrated door panel completely covers the door frame and provides a built-in appearance.

Integrated Panel Preparation

1. Cut the panels to the dimensions listed in the diagram below.
2. Optional: Stain or Finish panel to desired stain or color. Be sure to closely follow the instructions provided by the manufacturer.
3. Optional: Install handles and hardware.

Integrated Panel Dimensions

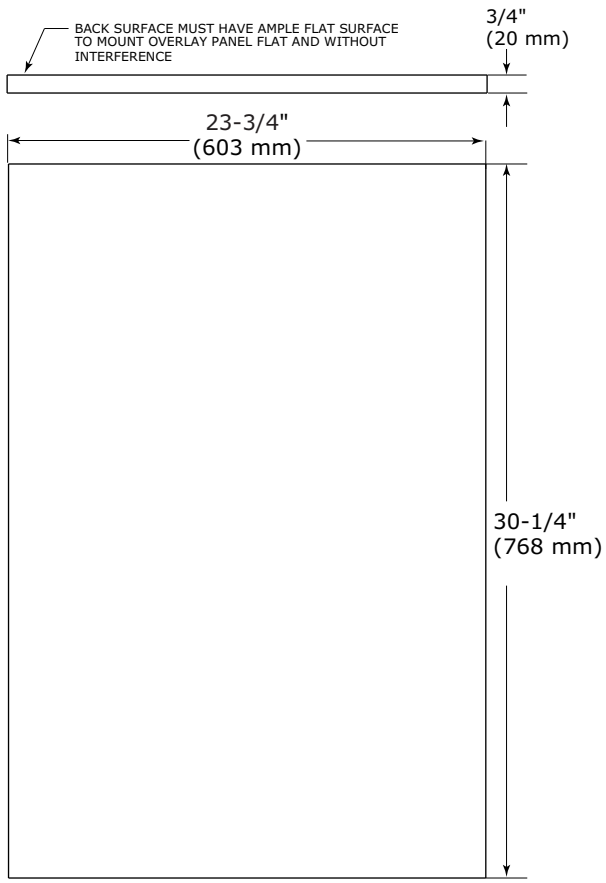

Integrated Panel

Integrated Panel Installation

1. Fully open door/drawer.

2. Starting at corner, pull gasket away from door/ drawer.

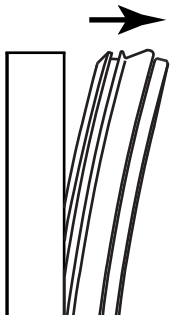

3. Continue to pull gasket free from gasket channel.

4. Upon removal, lay gasket down on a flat surface.

5. Partially loosen the 3 screws, securing the top hinge to the cabinet.

6. Align the panel with the outside edge (opposite the hinge) and high enough to align with the highest point in the door/drawer.

7. Insert panel underneath top hinge and apply upward pressure while bringing the lower portion of the panel flush to the door inside the lower hinge. The panel will fit snuggly

8. Align door with cabinet. Tighten the top 3 screws, securing the top hinge to the cabinet.

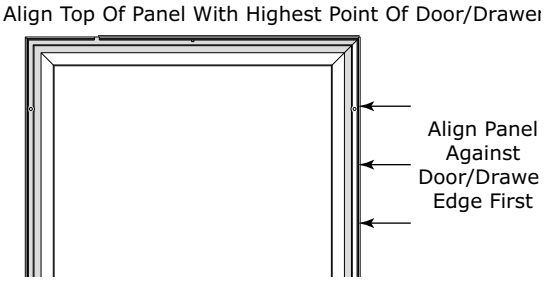

NOTICE

Due to differences in floor construction or surrounding cabinetry, the panel may not sit flush with the top of the door/drawer.

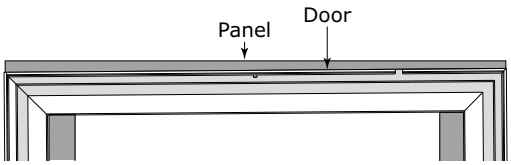

9. Secure integrated panel to door/drawer using clamps. A robust tape may also be used. U-Line recommends the use of bar clamps to secure the panel to the door/drawer. If using tape, be certain the tape will not damage panel finish upon removal.

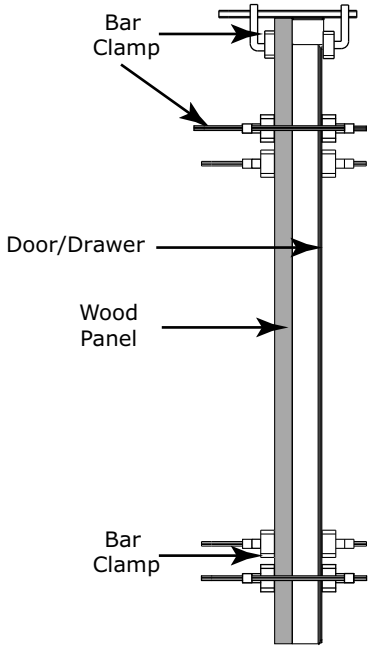

10. Using a 7/64" (3 mm) drill bit, drill 6 pilot holes into the wood panel 1/2" (12 mm) deep using the holes in the door/drawer frame as a guide.

NOTICE

It is important to ensure that all drilled holes are drilled to the correct depth in order to avoid splits in the wood when hardwood is installed.

11. Locate 6 of the #6x 1-1/4" (32 mm) screws provided with your unit.

12. Using a Phillips screwdriver, place one screw into each of the 6 pilot holes and screw down. Do not overtighten screws.

13. Be sure the screws force their way past the opening on the gasket channel and sit flush against the bottom of the channel.

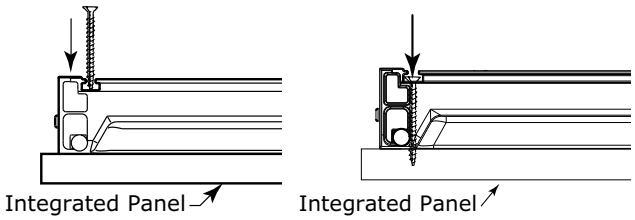

14. Remove clamps from door/drawer.

NOTICE

If panel requires additional adjustment after removing clamps, slightly loosen each screw and adjust panel as necessary. Tighten screws upon completion.

15. Starting at the corners, re-install the gasket into the gasket channel in the frame. Make sure the gasket is fully seated. This may take some force.

Grille Installation

REMOVING AND INSTALLING GRILLE

⚠ WARNING

Disconnect electric power to the unit before removing the grille.

When using the unit, the grille must be installed.

⚠ WARNING

DO NOT touch the condenser fins. The condenser fins are SHARP and can be easily damaged.

Removing the grille

1. Disconnect power to the unit.

2. Loosen the two screws (1).

3. Remove grille (2) from unit.

Installing the grille

1. Align cabinet and grille holes and secure, but do not over tighten grille screws (1).

Note: When installing next to a 15” wide U-Line product, use the supplied spacers behind the grille. The 24” grille will now be on the same plane as the 15” grille.

2. Reconnect power to the unit.

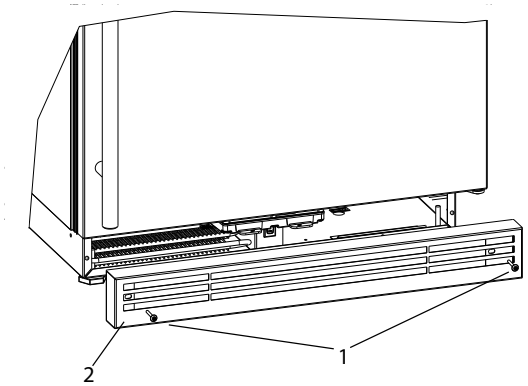

Door Swing

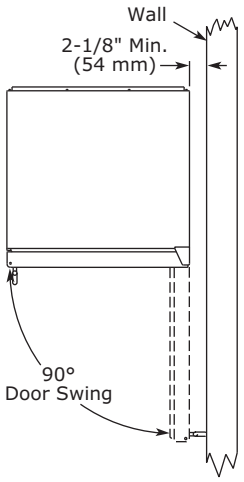

Units have a zero clearance for the door to open 90°, when installed adjacent to cabinets.

Stainless Steel models require 2-1/8" (54 mm) door clearance to accommodate the handle if installed next to a wall.

Door Adjustments

HINGE COVER (if equipped)

Hinge cover included with the literature bag is optional.

To install hinge cover:

1. Press hinge cover squarely over hinge.

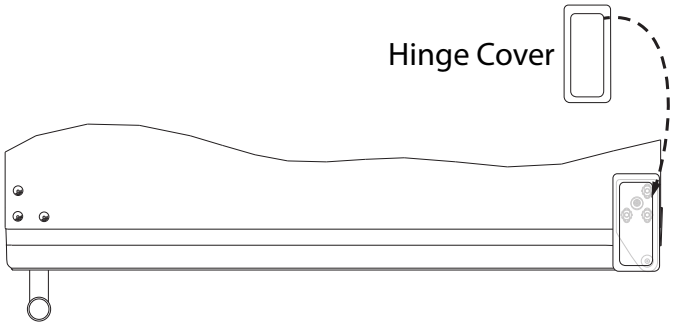

DOOR ALIGNMENT AND ADJUSTMENT

Align and adjust the door if it is not level or is not sealing properly. If the door is not sealed, the unit may not cool properly, or excessive frost may form in the interior.

NOTICE

Properly aligned, the door's gasket should be firmly in contact with the cabinet all the way around the door (no gaps). Carefully examine the door's gasket to ensure that it is firmly in contact with the cabinet. Also make sure the door gasket is not pinched on the hinge side of the door.

To align and adjust the door:

1. Gently pry off hinge cover (if equipped) from top of unit.
2. Loosen (do not remove) top and bottom hinge screws using a Torx T-25 screwdriver.
3. Align door squarely with cabinet.
4. Make sure gasket is firmly in contact with cabinet all the way around the door (no gaps).
5. Tighten bottom hinge screws.
6. Tighten top hinge screws and replace hinge cover.

REVERSING THE DOOR

Location of the unit may make it desirable to mount the door on the opposite side of the cabinet.

The hinge hardware will be removed and reinstalled on the opposite side of the cabinet.

TO REVERSE THE DOOR

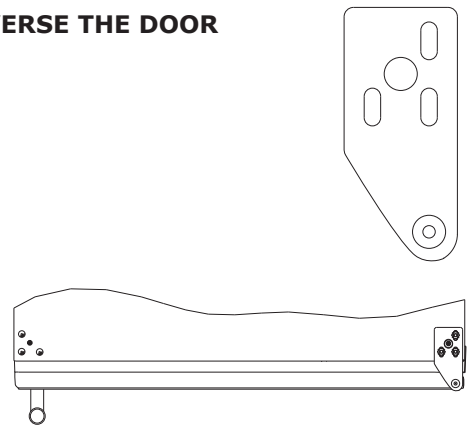

Remove grille:

Remove the grille (see GRILLE INSTALLATION section of this guide).

Remove arrow clips or screws:

1. With a puddy knife or other flat tool, gently pry each arrow clip from hinge mounting holes.
2. Set aside arrow clips to be reused on the opposite side.

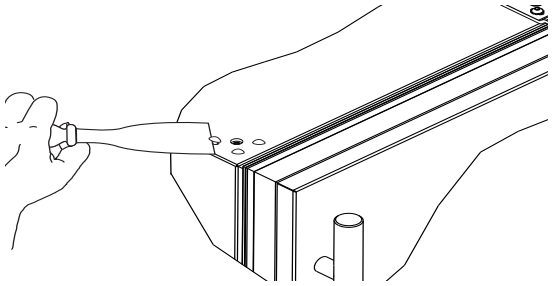

Remove top hinge and door:

1. Hold door to keep it from falling.
2. Remove top hinge from cabinet using a Torx T-25 screwdriver to remove three screws. Set aside and save for future use.

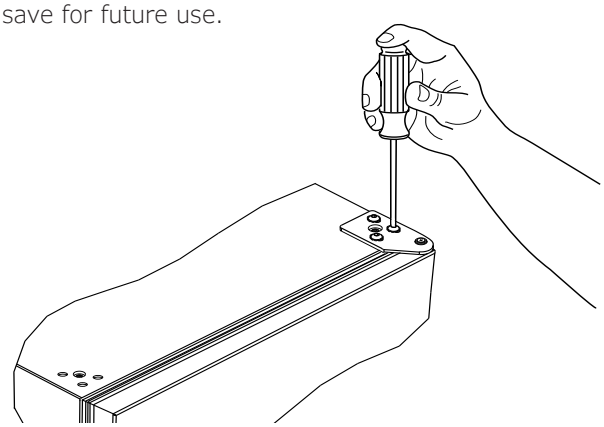

3. Remove door by tilting forward and lifting door off bottom hinge. Retain shoulder washers; they will be reused.
4. Insert arrow clips or screws into holes.

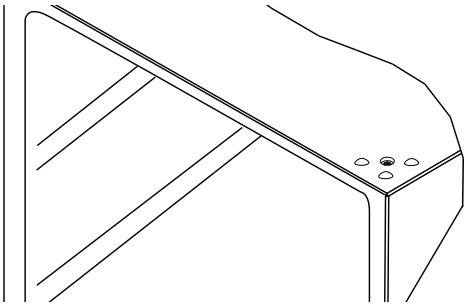

Remove bottom hinge:

1. Remove bottom hinge from cabinet using a T-25 TORX screw driver to remove three screws.

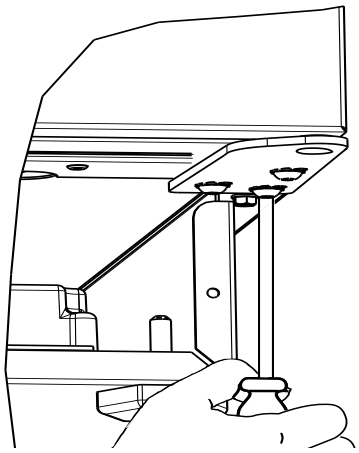

2. Remove corresponding screws on opposite side of cabinet. On some models there may be a nut behind one or both screws on either side.

Install bottom hinge:

Install two or three screws, depending on model. Replace nuts if used.

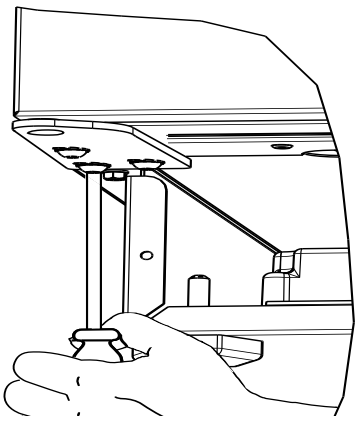

Install top hinge and door:

1. Install hinge with longer straight edge aligned to outside edge of cabinet. Do not tighten.

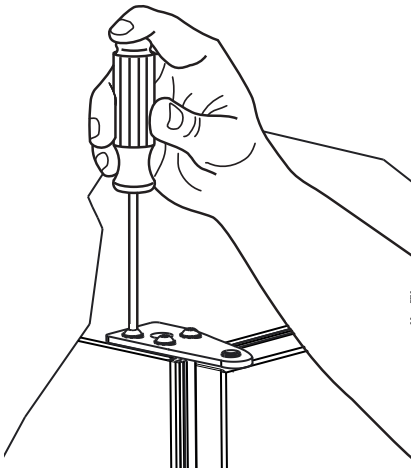

2. Rotate door 180° and set on bottom hinge.
3. Align edge of the hinge with the outer edge of the unit.
4. Tighten three hinge screws using a Torx T-25 screwdriver.

Align and adjust the door:

Align and adjust the door (see DOOR ALIGNMENT AND ADJUSTMENT)

Install grille and hinge cover (if equipped)

Free Standing Kit

Te free standing kit is an optional accessory (ULAFREESTANDS), used when unit is freestanding - not built into a cabinet. Available at u-line.com.

To install the kit:

1. Remove grille (see GRILLE INSTALLATION section).

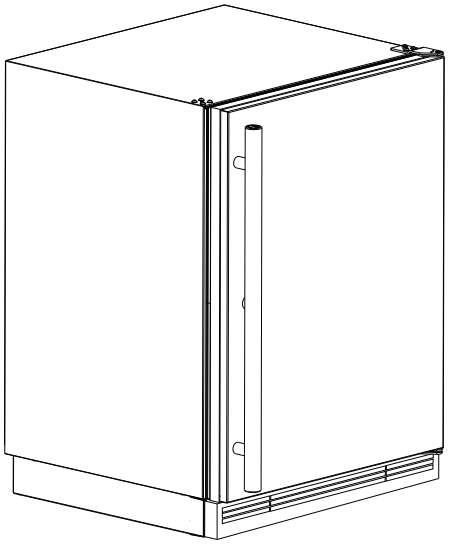

2. Place shell accessory over front and back of cabinet base, aligning holes of shell accessory with the holes on the base. Insert sheet metal screw in back of base.

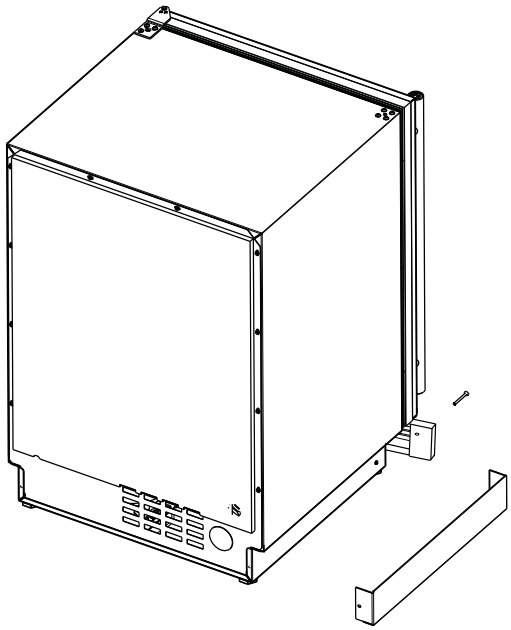

3. Align front hole wit hole in shell accessory, hole in base, and hole in grille. Tighten screw.

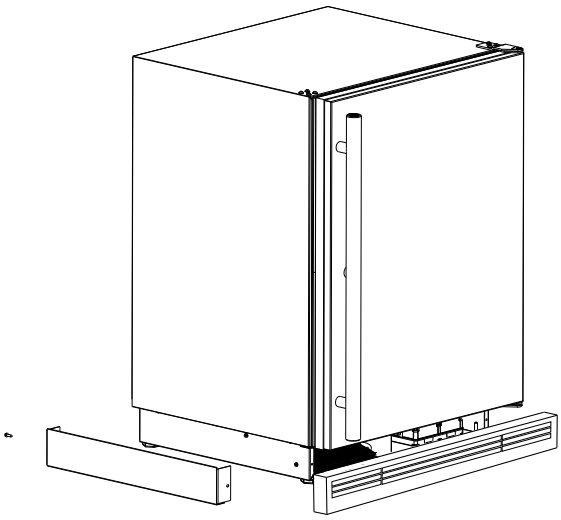

First Use

Initial startup requires no adjustments. If the unit was turned off, press ⏻ and the unit will immediately switch on. To turn off, press ⏻ and release. See CONTROL OPERATION section for more details.

NOTICE

Temperature displayed reflects actual temperature inside unit.

If the temperature displayed is different than selected, the unit is progressing towards the selected temperature. Time to reach set point varies based upon ambient temperature, temperature of product loaded, door openings, etc. U-Line recommends allowing the unit to reach set point before loading.

Approximate time required (empty unit) when converting between refrigerator and freezer:

- **38ºF to 0ºF - 1 hour**
- **0ºF to 38ºF - 4 hours**

Control Operation

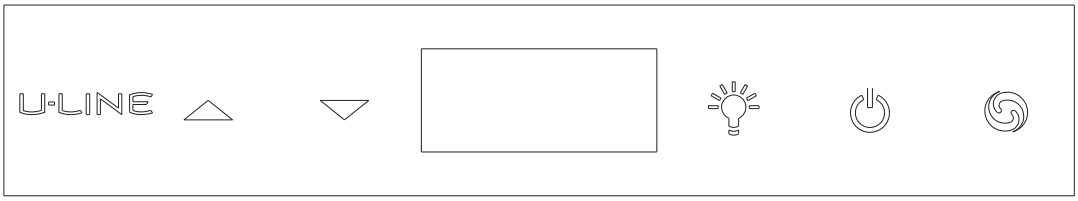

CONTROL FUNCTION GUIDE

FUNCTION	COMMAND	NOTES
ON/OFF	Press and release	Unit will immediately turn On or OFF
Leave interior light on	Press and release to leave interior light on for 12 hours; press again to deactivate	After 12 hours, factory default is restored; light will turn on when door is open
Adjust Temperature	Press or and release	When the display is flashing, press or to adjust the set point temperature. Note: temperature displayed is the actual temperature inside unit
Toggle between ^{O}F / ^{O}C	Hold and for 5 seconds	The display will change units
Toggle between Freezer/ Refrigerator	Hold for 5 seconds	Unit will “beep” and display will show the default set point for Refrigerator/Freezer
Enable Sabbath Mode	Press and hold for 5 seconds and release	The ^{O}F / ^{O}C symbol will flash briefly after 5 seconds. Interior light and display will go dark and remain so until user resets mode - unit continues to operate
Disable Sabbath Mode	Press and release	Display and interior light return to normal operation
Showroom Mode	Hold and for 5 seconds	Display will show SH for 2 seconds. Interior light and display will function normally, but the compressor and fans will not energize. Repeat command to return to normal operation. Display will show EH for 2 seconds.

This unit is Star-K certified. See www.star-k.org for more details.

DOOR ALERT NOTIFICATION

When the door is left open for more than 5 minutes:

- A tone will sound for several seconds every minute
- dr will appear in display

Close door to silence alert and reset

Airflow and Product Loading

NOTICE

The unit requires proper airflow to perform at its highest efficiency. Do not block the front grille, internal fans or vents at any time, or the unit will not perform as expected. Do not install the unit behind a door.



Interior Adjustments

FREEZER BASKETS

Freezer Basket Installation & Removal

Freezer baskets are removable for cleaning. To remove the baskets follow the instructions below.



1. Fully extend the basket you wish to remove from the cabinet.

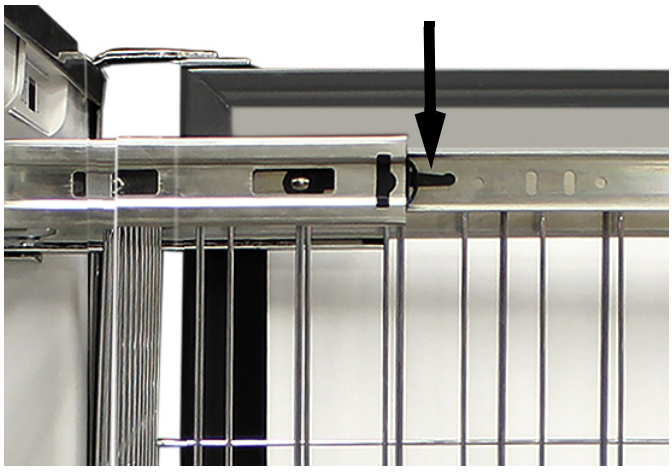

2. Press the left basket release lever down. At the same time, lift the matching right basket release lever up. Pull basket out until it is free of the tracks and the cabinet.

NOTICE

Do not remove the track rails from the cabinet.

To reinstall:

1. Align the left and right basket channels with the tracks in the cabinet. Ensure an even track engagement on both sides by gently pushing the basket into the cabinet until it stops.

2. Before reloading the basket, ensure proper movement of the travel stops in the left and right track rails by pulling the basket out gently until it stops.

3. Push the basket into the cabinet.

Cleaning

Baskets may be cleaned in a soapy warm water solution. A general household disinfectant may be used if necessary. Be sure to completely dry your basket before reinstalling. Do not submerge basket assembly.

NOTICE

Freezer baskets are NOT dishwasher safe.

Cleaning

Stainless Models

Stainless door panels and handles can discolor when exposed to chlorine gas, pool chemicals, saltwater or cleaners with bleach.

Keep your stainless unit looking new by cleaning with a good quality all-in-one stainless steel cleaner and polish monthly. For best results use Claire® Stainless Steel Polish and Cleaner. Comparable products are acceptable. Frequent cleaning will remove surface contamination that could lead to rust. Some installations may require cleaning weekly.

Do not clean with steel wool pads.

Do not use stainless steel cleaners or polishes on any glass surfaces.

Clean any glass surfaces with a non-chlorine glass cleaner.

Do not use cleaners not specifically intended for stainless steel on stainless steel surfaces (this includes glass, tile and counter cleaners).

If any surface discoloring or rusting appears, clean it quickly with Bon-Ami® or Barkeepers Friend Cleanser® and a nonabrasive cloth. Always clean with the grain. Always finish with Claire® Stainless Steel Polish and Cleaner or comparable product to prevent further problems.

Using abrasive pads such as Scotchbrite™ will cause the graining in the stainless steel to become blurred.

Rust not cleaned up promptly can penetrate the surface of the stainless steel and complete removal of the rust may not be possible.

Integrated Models

To clean integrated panels, use household cleaner per the cabinet manufacturer's recommendation.

INTERIOR CLEANING

Disconnect power to the unit.

Clean the interior and all removed components using a mild nonabrasive detergent and warm water solution applied with a soft sponge or non-abrasive cloth.

Rinse the interior using a soft sponge and clean water.

Do not use any solvent-based or abrasive cleaners. These types of cleaners may transfer taste to the interior products and damage or discolor the lining.

DEFROSTING

Under normal conditions this unit does not require manual defrosting. Minor frost on the rear wall or visible through the evaporator plate vents is normal and will melt during each off cycle.

If there is excessive build-up of 1/4" (6 mm) or more, manually defrost the unit.

Ensure the door is closing and sealing properly.

High ambient temperature and excessive humidity can also produce frost.

⚠ CAUTION

DO NOT use an ice pick or other sharp instrument to help speed up defrosting. These instruments can puncture the inner lining or damage the cooling unit. DO NOT use any type of heater to defrost. Using a heater to speed up defrosting can cause personal injury and damage to the inner lining.

NOTICE

The drain pan was not designed to capture the water created when manually defrosting. To prevent water from overflowing the drain pan and possibly damaging water sensitive flooring, the unit must be removed from cabinetry.

To defrost:

1. Disconnect power to the unit.
2. Remove all products from the interior.
3. Prop the door in an open position (2 in. [50 mm] minimum).
4. Allow the frost to melt naturally.
5. After the frost melts completely clean the interior and all removed components. (See INTERIOR CLEANING).
6. When the interior is dry, reconnect power and turn unit on.

Cleaning Condenser

INTERVAL - EVERY SIX MONTHS

To maintain operational efficiency, keep the front grille free of dust and lint, and clean the condenser when necessary. Depending on environmental conditions, more or less frequent cleaning may be necessary.

⚠ WARNING

Disconnect electric power to the unit before cleaning the condenser.

NOTICE

DO NOT use any type of cleaner on the condenser unit.

1. Remove the grille.
2. Clean the condenser coil using a using a soft brush with a “combing” action or vacuum cleaner.
3. Install the grille.

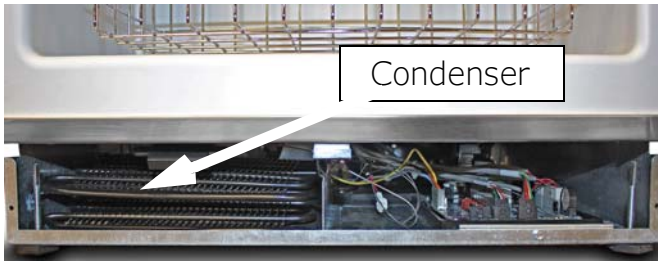

Extended Non-Use

VACATION/HOLIDAY, PROLONGED SHUTDOWN

The following steps are recommended for periods of extended non-use:

1. Remove all consumable content from the unit.

2. Disconnect the power cord from its outlet/socket and leave it disconnected until the unit is returned to service.

3. If ice is on the evaporator, allow ice to thaw naturally.

4. Clean and dry the interior of the unit. Ensure all water has been removed from the unit.

5. The door must remain open to prevent formation of mold and mildew. Open door a minimum of 2" (50 mm) to provide the necessary ventilation.

WINTERIZATION

If the unit will be exposed to temperatures of 40°F (5°C) or less, the steps above must be followed.

For questions regarding winterization, please call U-Line at 414.354.0300.

⚠ CAUTION

Damage caused by freezing temperatures is not covered by the warranty.

Troubleshooting

BEFORE CALLING FOR SERVICE

If you think your U-Line product is malfunctioning, read the CONTROL OPERATION section to clearly understand the function of the control.

If the problem persists, read the NORMAL OPERATING SOUNDS and TROUBLESHOOTING GUIDE sections below to help you quickly identify common problems and possible causes and remedies. Most often, this will resolve the problem without the need to call for service.

IF SERVICE IS REQUIRED

If you do not understand a troubleshooting remedy, or your product needs service, contact U-Line Corporation directly at +1.616.754.5601.

When you call, you will need your product Model and Serial Numbers. This information appears on the Model and Serial number plate located on the upper right or rear wall of the interior of your product.

NORMAL OPERATING SOUNDS

All models incorporate rigid foam insulated cabinets to provide high thermal efficiency and maximum sound reduction for its internal working components. Despite this technology, your model may make sounds that are unfamiliar.

Normal operating sounds may be more noticeable because of the unit's environment. Hard surfaces such as cabinets, wood, vinyl or tiled floors and paneled walls have a tendency to reflect normal appliance operating noises.

Listed below are common refrigeration components with a brief description of the normal operating sounds they make. NOTE: Your product may not contain all the components listed.

- Compressor: The compressor makes a hum or pulsing sound that may be heard when it operates.
- Evaporator: Refrigerant flowing through an evaporator may sound like boiling liquid.
- Condenser Fan: Air moving through a condenser may be heard.
- Automatic Defrost Drain Pan: Water may be heard dripping or running into the drain pan when the unit is in the defrost cycle.

TROUBLESHOOTING GUIDE

⚠ DANGER

ELECTROCUTION HAZARD. Never attempt to repair or perform maintenance on the unit before disconnecting the main electrical power.

Troubleshooting - What to check when problems occur:

Problem	Possible Cause and Remedy
Interior Light Does Not Illuminate	If the unit is cooling, it may be in Sabbath mode.
Light Remains on When Door Is Closed.	Turn off light switch if equipped. Adjust light actuator bracket on bottom of door.
Unit Develops Frost on Internal Surfaces.	Ensure the door is closing and sealing properly.
Unit Develops Condensation on External Surfaces.	The unit is exposed to excessive humidity. Moisture will dissipate as humidity levels decrease.
Product is Not Cold Enough	Air temperature does not indicate product temperature. See CHECKING PRODUCT TEMPERATURE below. Adjust the temperature to a cooler set point. Ensure unit is not located in excessive ambient temperatures or in direct sunlight. Ensure the door is closing and sealing properly. Ensure the interior light has not remained on too long. Ensure nothing is blocking the front grille, found at the bottom of the unit. Ensure the condenser coil is clean and free of any dirt or lint build-up.

CHECKING PRODUCT TEMPERATURE

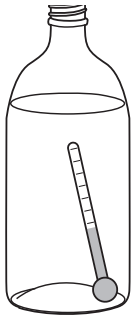

To check the actual product temperature in the unit:

1. Partially fill a plastic (nonbreakable) bottle with water.
2. Insert an accurate thermometer.
3. Tighten the bottle cap securely.
4. Place the bottle in the desired area for 24 hours.
5. Avoid opening the unit during the testing period.
6. After 24 hours, check the temperature of the water. If required, adjust the temperature control in a small increment (see CONTROL OPERATION).

Causes which affect the internal temperatures of the cabinet include:

- Temperature setting.
- Ambient temperature where installed.
- Installation in direct sunlight or near a heat source.
- The number of door openings and the time the door is open.
- The time the internal light is illuminated. (This mainly affects product on the top rack or shelf.)
- Obstruction of front grille or condenser.

Wire Diagram

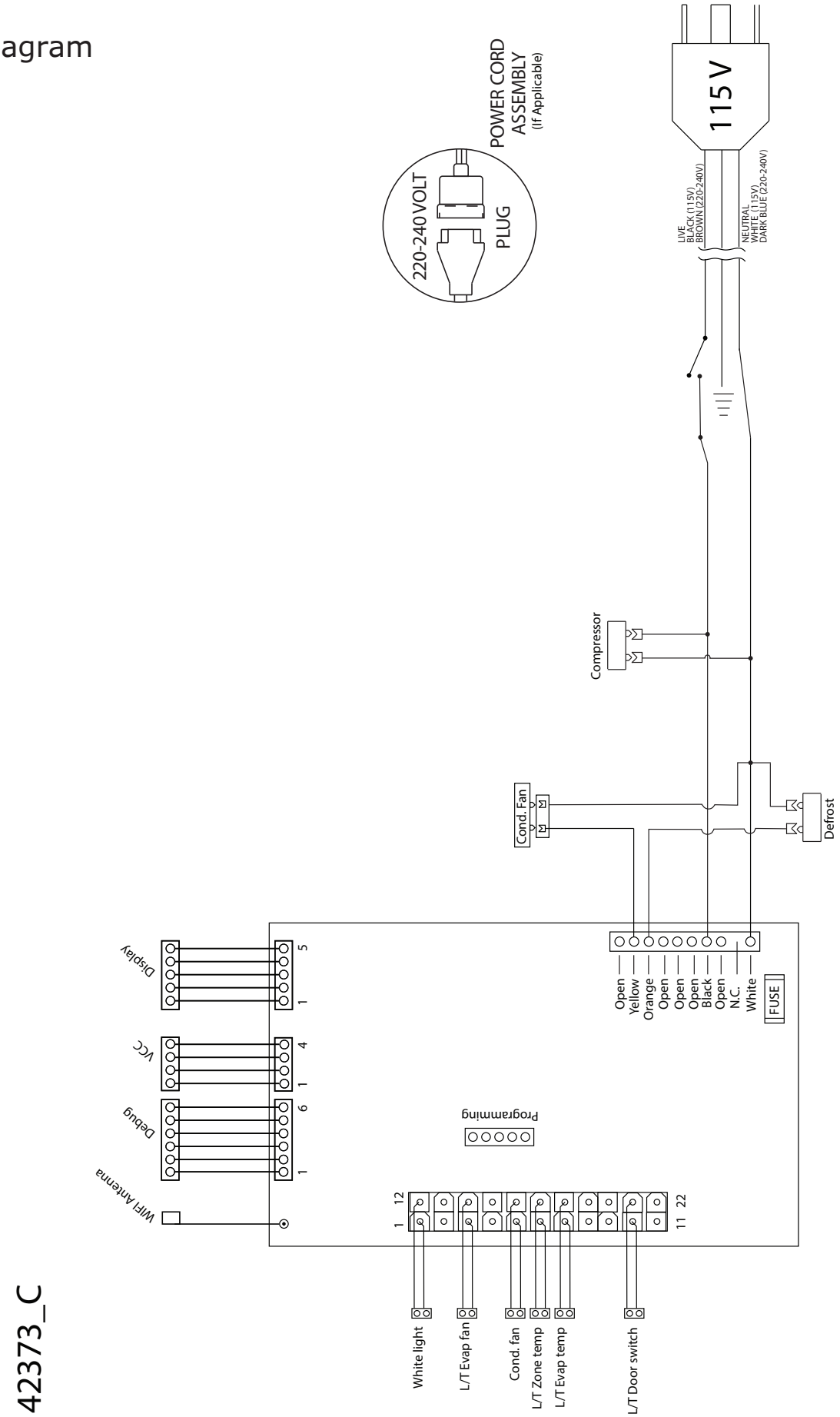

Product Liability

Field service technicians are authorized to make an initial assessment in the event of reported damages. If there are any questions about the process involved, the technician should call U-Line for further explanation.

While inspecting for defects or installation issues, photos should be taken to document any damages or issues found.

During the assessment, if the service technician is able to find the source of the damage and it can be resolved by replacement of a part, the servicer is authorized to replace the part in question. The part that caused the damage must be returned to U-Line in its entirety. The part must be clearly labeled with the serial number of the unit it was removed from, the date, and the servicer who removed the part.

If the service technician determines the damage is the result of installation issues (water connection/drain, etc.), the consumer would be notified and the issues shall be resolved at the direction of the consumer.

If damage is evident and the service technician is unable to find the source, U-Line must be contacted at +1.414.354.0300 for further direction.

8900 N. 55th Street • Milwaukee, WI 53223
T: +1.414.354.0300 • F: +1.414.354.5696
Website: www.u-line.com

Right product. Right place.
Right temperature Since 1962.

Parts

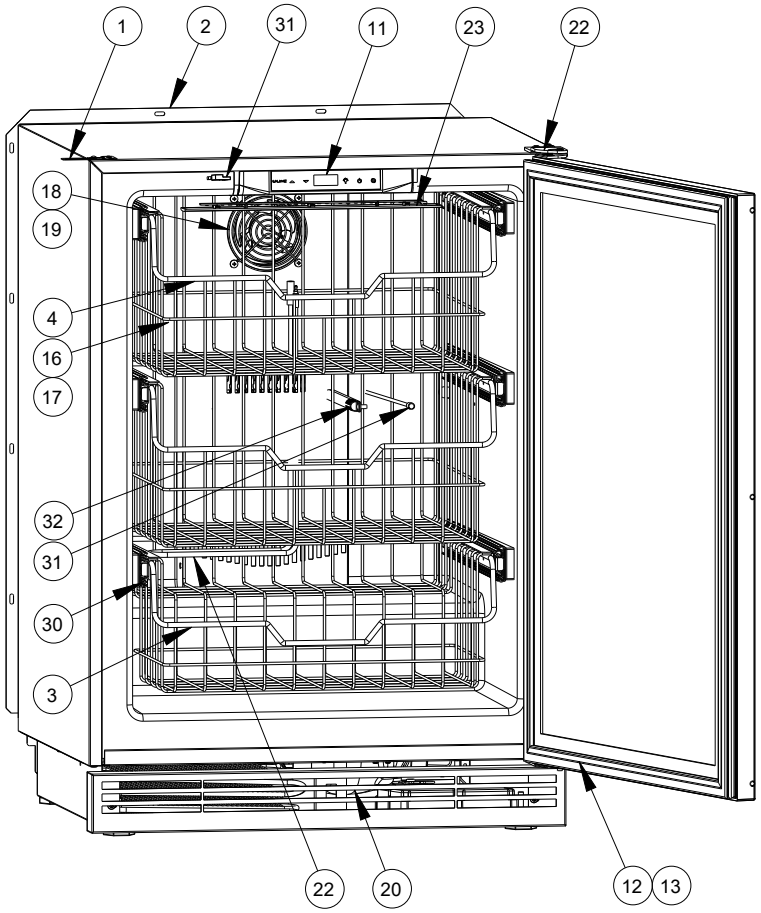

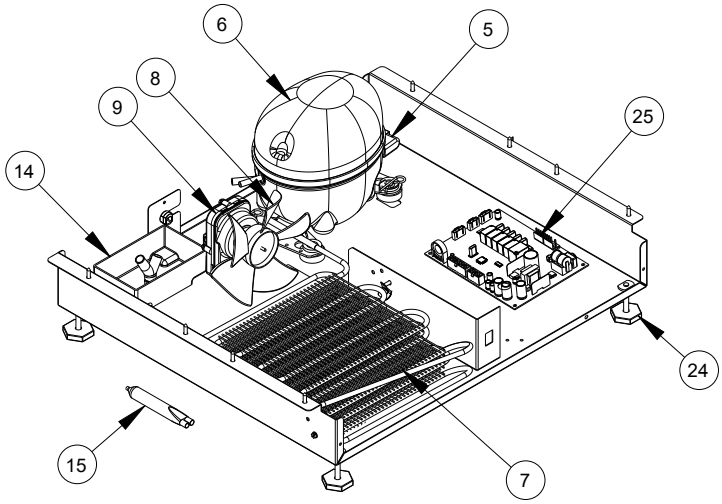

	UHFZ124-IS01A	
1	ANTI TIP BRACKET	80-54239-00
2	BACK PANEL	80-54853-00
3	BASKET, LOWER	80-54802-00
4	BASKET, UPPER	80-54803-00
5	COMPRESSOR ELECTRICALS	80-54800-00
6	COMPRESSOR	80-54799-00
7	CONDENSER ASSY	80-54801-00
8	CONDENSER FAN BLADE	80-54798-00
9	CONDENSER FAN MOTOR	80-54797-00
10	DEFROST THERMOSTAT*	80-54812-00
11	DISPLAY ASSEMBLY	80-55414-00
12	DOOR ASSEMBLY	80-54316-01
13	DOOR GASKET	80-55498-00
14	DRAIN PAN	80-54217-00
15	DRIER	80-54055-00
16	EVAPORATOR ASSY	80-54813-00
17	EVAPORATOR COVER & SCREWS	80-54808-00
18	EVAPORATOR FAN	80-54807-00
19	EVAPORATOR FAN COVER	80-54809-00
20	GRILLE ASSY	80-55597-01
21	HEATER*	80-54810-00
22	HINGES	80-55390-00
23	LED LIGHT STRIP & COVER	80-54000-00
24	LEG LEVELERS (4)	80-54019-00
25	MAIN BOARD	80-55398-00
26	PACKAGING*	80-54209-00
27	POWER CORD, INTERNAL*	80-55514-00
28	POWER CORD, EXTERNAL*	80-55513-00
29	REED SWITCH+	80-54284-00
30	SLIDE ASSEMBLY	80-54806-00
31	THERMISTOR	80-54006-00
32	THERMISTOR COVER & PIN	80-54237-00
33	WIRE HARNESS*	80-55415-00

* Not Pictured
+Located behind the display

System Diagnosis Guide

REGRIGERATION SYSTEM DIAGNOSIS GUIDE

System Condition	Suction Pressure	Suction Line	Compressor Discharge	Condenser	Capillary Tube	Evaporator	Wattage
Normal	Normal	Slightly below room temperature	Very hot	Very hot	Warm	Cold	Normal
Overcharge	Higher than normal	Very cold may frost heavily	Slightly warm to hot	Hot to warm	Cool	Cold	Higher than normal
Undercharge	Lower than normal	Warm- near room temperature	Hot	Warm	Warm	Extremely cold near inlet - Outlet below room temperature	Lower than normal
Partial Restriction	Somewhat lower than normal vacuum	Warm- near room temperature	Very hot	Top passes warm - Lower passes cool (near room temperature) due to liquid	Room temperature (cool) or colder	Extremely cold near inlet - Outlet below room temperature backing up	Lower than normal
Complete Restriction	In deep vacuum	Room temperature (cool)	Room temperature (cool)	Room temperature (cool)	Room temperature (cool)	No refrigeration	Lower than normal
No Gas	0 PSIG to 25"	Room temperature (cool)	Cool to hot	Room temperature (cool)	Room temperature (cool)	No refrigeration	Lower than normal

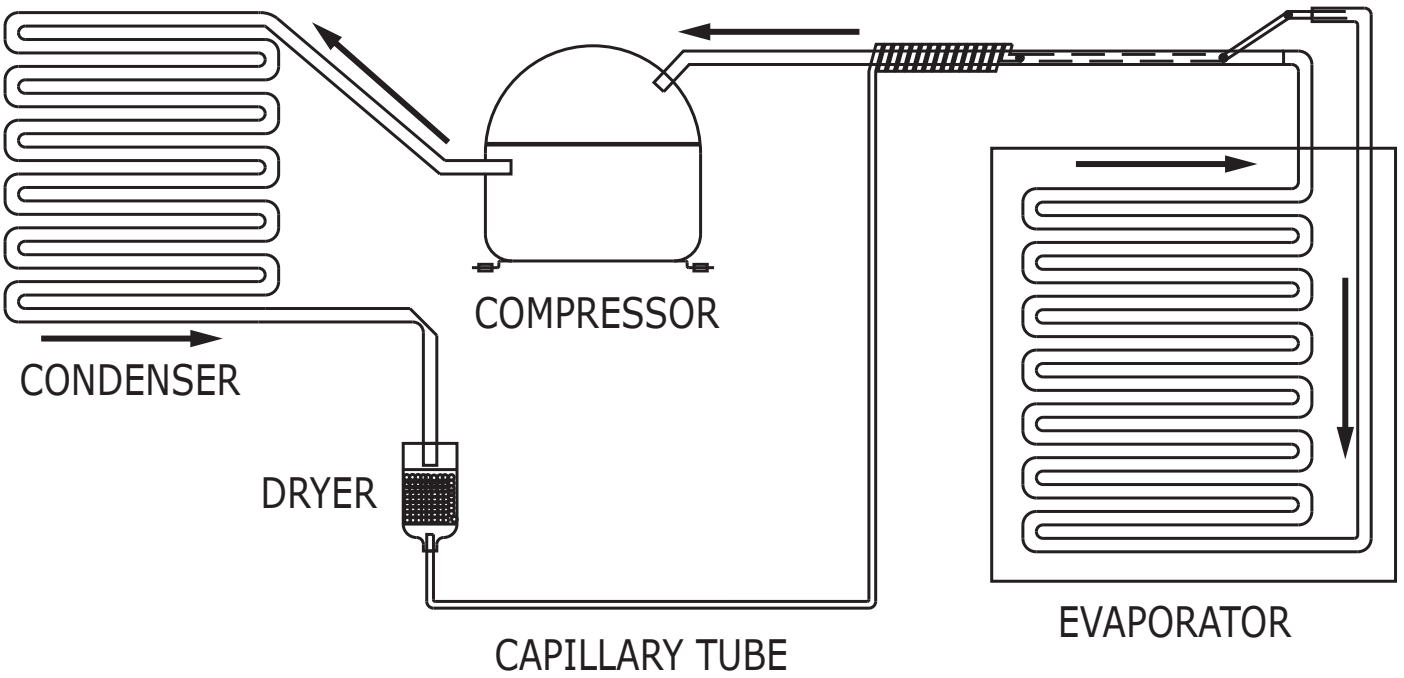

Compressor Specifications

⚠ DANGER

Electrocution can cause death or serious injury. Burns from hot or cold surfaces can cause serious injury. Take precautions when servicing this unit.

Disconnect the power source.

Do not stand in standing water when working around electrical appliances.

Make sure the surfaces you touch are not hot or frozen.

Do not touch a bare circuit board unless you are wearing an anti-static wrist strap that is grounded to an electrical ground or grounded water pipe.

Handle circuit boards carefully and avoid touching components.

To measure the start winding resistance, measure across the C and S pins.

To measure the run winding resistance, measure across the C and R pins.

Also check S to R and you should get the sum of the run and start windings.

To ensure the windings are not shorted, check the S and R to ground.

Electrical Relay and Overload Protector

	EM3D50HLT
Refrigerant	R134a
Voltage	115 - 127 VAC
Frequency	60 Hz
Run Cap	12µF/180 VAC
Start Winding	5.95 Ohm at 77°F/25°C
Run Winding	5.35 Ohm at 77°F/25°C
LRA	8 A
FLA	1.34 A
Starting Device	71055
Overload	71056

* All resistance readings are ±10%

Troubleshooting - Extended

⚠ CAUTION

Never attempt to repair or perform maintenance on the unit until the main electrical power has been disconnected from the unit.

SPECIFIC ERRORS AND ISSUES

The advanced diagnostic capabilities of the electronic controls utilized on the 1, 3, and 5 Class units allow for easy and thorough troubleshooting.

Navigation of the control is the key and is explained in the CONTROL OPERATION section of the manual, along with control button layout, control function descriptions, a service mode menu and service menu selection explanations.

Verification of temperature and thermistor performance can be identified by directly viewing thermistor readings in the service mode.

Included in this section are some diagnostic tips; if additional help is required, please contact the U-Line Corp, “Customer Care Facility” at +1.414.354.0300 for assistance.

NORMAL OPERATING SOUNDS

All models incorporate rigid foam insulated cabinets to provide high thermal efficiency and maximum sound reduction for its internal working components. Despite this technology, your model may make sounds that are unfamiliar.

Normal operating sounds may be more noticeable because of the unit’s environment. Hard surfaces such as cabinets, wood, vinyl or tiled floors and paneled walls have a tendency to reflect normal appliance operating noises.

Listed below are common refrigeration components with a brief description of the normal sounds they make. NOTE: Your product may not contain all the components listed.

- Compressor: The compressor makes a hum or pulsing sound that may be heard when it operates.
- Evaporator: Refrigerant flowing through an evaporator may sound like boiling liquid.
- Condenser Fan: Air moving through a condenser may be heard.
- Automatic Defrost Drain Pan: Water may be heard dripping or running into the drain pan when the unit is in the defrost cycle.

Solenoid Valves: An occasional clicking sound may be heard as solenoid valves are operated.

TROUBLESHOOTING GUIDE

Concern	Potential Causes	Action
Not Cooling	Compressor overheating	Verify proper air flow through condenser. Is condenser clean?
		Confirm condenser fan operation.
	Compressor not operating	Test overload and relay, replace as needed.
	Compressor operating - no cooling	Refer to System Diagnosis Guide.
Frozen Product	Control set too cold	Adjust Set Point Temp accordingly.
	Thermistor failure	Check Error Log in Service Mode, OHM thermistor.
Frost Buildup Inside Unit	Door Ajar or Restricted from Closing	Check door clearance to adjoining cabinetry. Check distribution of product in unit.
	Thermistor failure	OHM thermistor
Display Not Working	Display unplugged	Verify that both ends of the display wiring are firmly connected.
	Display wiring broken or damaged	Perform continuity test of wiring and replace as needed.
Interior Lights Not Working	Door switch misaligned or defective	Check the function of reed switch and door magnet adjustment.
Noisy	Refrigeration tubing touching cabinet	Carefully reposition tubing.
	Fan blade obstruction (wiring, foam insulation, packaging material)	Remove obstruction.

MAIN CONTROL

The main control board is very robust and is rarely the cause of system issues. It is important to fully diagnose the board for any suspected failures before attempting to remove the board for replacement or service. Follow the guidelines below to fully test and diagnose the main control.

Power Fault

If the unit does not (or seems to not) power on, follow the flow chart below to help diagnose the issue. Before beginning it is important to first verify the unit is not simply set to sabbath mode.

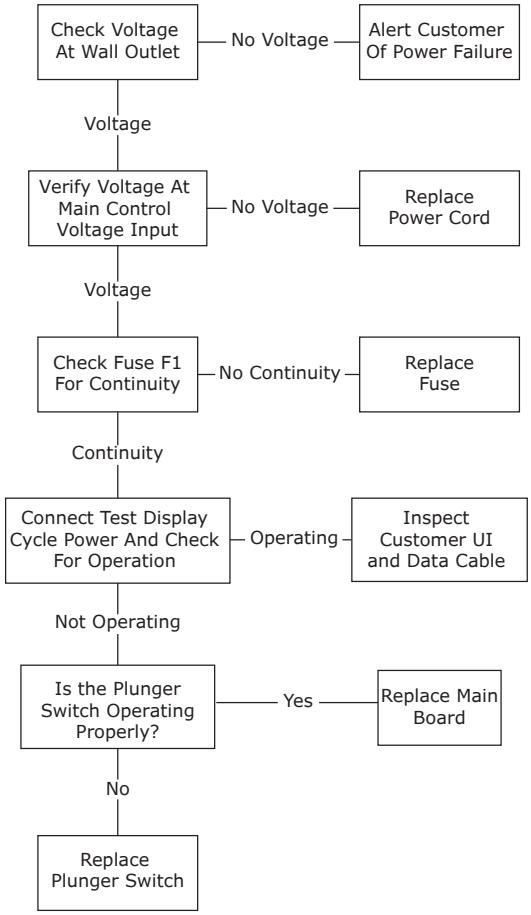

⚠ CAUTION

Precautions must be taken while working with live electrical equipment. Be sure to follow proper safety procedures while performing tests on live systems.

PLUNGER SWITCH

A plunger switch is used to monitor door state. When the door is closed it comes into contact with the plunger which closes a circuit which turns the light and display off. When the door is open the plunger moves outward and opens the circuit. If the door is left open for longer than 5 minutes the switch will trigger an error code and set an audible warning.

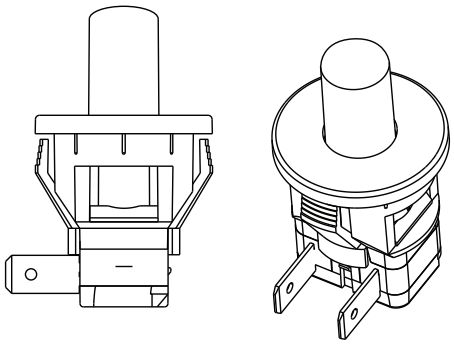

Control Operation-Service

UI BUTTON LAYOUT

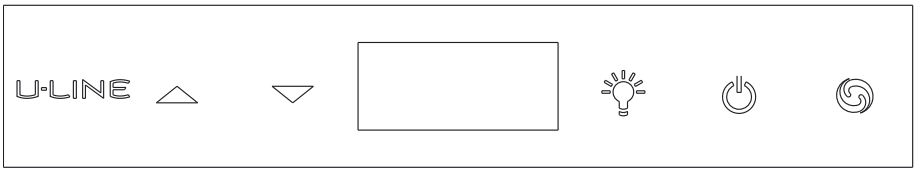

1. **Up Button**
   -Increases temperature
   -Navigates through service menu
   -LED activated with button activation

2. **Down Button**
   -Decreases temperature
   -Navigates through service menu
   -LED activated with button activation

3. **Light Button**
   -Activates light for 3 hours on select models
   -Used to select items in service menu
   -LED activated with button activation

CONTROL FUNCTION GUIDE

FUNCTION	COMMAND	DISPLAY/OPTIONS
ON/OFF	Press ⏻ and release	Unit will immediately turn ON or OFF
Toggle lights	Press 💡 and release to leave interior light on for 3 hours	Glass door wine captains and beverage centers only.
Adjust refrigerator temperature	Push ∧ or ∨ and release	When the "F" or "C" in the display is flashing, push ∧ or ∨ to adjust the set point temperature.
View temperature in unit	Push ∧ and ∨ and release together	The display will flash and then toggle from set point to temperature in unit.
Toggle between F/C	Hold the ∧ and ∨ for five seconds	The display will change units.

DOOR ALERT NOTIFICATION

When the door is left open for more than 5 minutes:

- An audible tone will sound for several seconds every minute.
- "dr" will appear in display.

Close door to silence alert and reset.

VIEWING ACTUAL TEMPERATURE

In viewing temperature in these modes any offsets are taken into account. This means that if you place a thermistor in a known temperature, let's say ice water, it may not read the 32°F that you would assume. If the control offset was preset at -3°F while you placed the thermistor in an icebath, the actual thermistor reading when viewing actual temperature would read 35°F. In the unit this would cause the cabinet to push itself 3° cooler. To view pure thermistor readings you must go into the service menu and choose the correct option.

To view the thermistor temperature, push and release the up and down keys. The display will show the corrected refrigerator temperature.

SHOWROOM MODE

This mode is designed to show units in a display environment. When in this mode the only functions will be the control and cabinet lights. The compressor, fans, etc. will not operate. To enter/exit this mode hold the light key and the power key for 5 seconds. The display will flash once and beep and the degree symbol will begin to flash.

When the degree symbol is flashing the unit will allow the use of the control for demonstrations. The unit can be left in this mode indefinitely.

ACCESS SERVICE MODE

To access the service menu for this model, remove the two screws that hold the display together.
Remove display circuit board. Press and hold the far left button on the display circuit board.

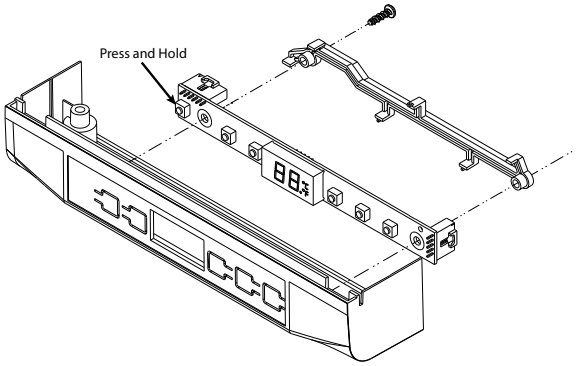

SERVICE MODE GUIDE

#	Service Mode Menu Item
1	View thermistor #1 (no offsets)
2	View thermistor #2 (no offsets)
3	View thermistor #3 (no offsets)
4	View thermistor #4 (no offsets)
5	Adjust thermistor #1 offset
6	Adjust thermistor #2 offset
7	Adjust thermistor #3 offset
8	Adjust thermistor #4 offset
9	View thermistor #2 set point no offsets
10	View thermistor #3 set point no offsets
11	View thermistor #4 set point no offsets
12	Adjust defrost interval 3 to 24 hours
13	Adjust defrost duration 0 to 99 minutes
14	View error log
15	Clear error log
16	Adjust thermistor #1 differential
17	Adjust evaporator fan delay in minutes (start of cooling cycle) 0 - 99 minutes
18	Adjust evaporator fan delay in minutes (after cooling cycle stops) 0 - 99 minutes
19	Individual component toggle
20	Model number indicator
21	Light all LED segments of display
22	View defrost cycles
23	View compressor run time
24	Activate defrost/harvest
25	Restore factory defaults
26	View software version - main board
27	View software version - user interface
28	Login period
29	Factory test mode
0	Exit service mode

NAVIGATE SERVICE MODE

Use up or down arrows to scroll through the menu.

Use the light bulb key to enter or exit menu. If values have been changed, they will be saved when exiting.

SERVICE MODE GUIDE

1. **THERMISTOR 1 — ZONE**
   This shows the pure thermistor reading with no offsets taken into account.
2. **THERMISTOR 2 — EVAPORATOR**
   This shows the pure thermistor reading with no offsets taken into account.
3. Does not apply to this model.
4. Does not apply to this model.
5. **THERMISTOR 1 — ZONE OFFSET**
   (DO NOT MAKE AN ADJUSTMENT TO THIS WITHOUT CONTACTING TECH LINE: +1.414.354.0300)
   This calibration is only to be used if actual temperature at thermistor #1 is off from set point.
   By adjusting the offset higher we can force the unit to drive the temperature down below the set point. (example: adjusting from 0 to +2 will drop the unit temperature 2 degrees)
6. **THERMISTOR 2 — EVAPORATOR OFFSET**
   (DO NOT MAKE AN ADJUSTMENT TO THIS WITHOUT CONTACTING TECH LINE: +1.414.354.0300)
7. **THERMISTOR 3 — AMBIENT OFFSET** Not adjustable.
8. Does not apply to this model.
9. **THERMISTOR 2 — SET POINT MINUS OFFSET**
   This shows the thermistor reading with offsets taken into account.
10. Does not apply to this model.
11. Does not apply to this model.
12. **ADJUST DEFROST INTERVAL — 3 TO 24 HOURS**
    This will adjust the interval between defrosts from 3 to 24 hours. Adjusting from the factory settings may cause undesired temperature in the refrigerator section.
13. **ADJUST DEFROST DURATION — 0 TO 99 MINUTES**
    The length of the defrost can be adjusted 0 to 99 minutes long. The other defrost parameters still apply. Lengthening a defrost may cause higher than normal temperatures in the refrigerator section.
14. **VIEW ERROR LOG**
    A list of the errors in the order they occurred will scroll once on the display. All errors are logged in memory. Only door error is displayed on the display and has an audible signal.
    E0: Door 1 (upper) open.
    E1: Thermistor 1 open.
    E2: Thermistor 2 open.
    E3: Thermistor 3 open.
    E4: Thermistor 4 open (Does not apply to this model).
    E5: Thermistor 1 shorted.
    E6: Thermistor 2 shorted.
    E7: Thermistor 3 shorted.
    E8: Thermistor 4 shorted (Does not apply to this model).
    E9: Door 2 (lower) open.
    P1: Pump Circuit open (Does not apply to this model).
15. **CLEAR ERROR LOG**
    To clear errors, press and hold (5 seconds) when CLR is flashing.
16. **THERMISTOR — 1 DIFFERENTIAL**
    This number should not be adjusted.
17. **EVAPORATOR FAN DELAY IN MINUTES — ON**
    "Fan Delay On" is the amount of time in minutes the fan will be delayed from starting from the beginning of a cooling cycle. Adjustable 0-99 minutes.
18. **EVAPORATOR FAN DELAY IN MINUTES — OFF**
    "Fan Delay Off" is the amount of time in minutes the fan will continue to run at the end of a cooling cycle. Adjustable 0-99 minutes.
19. **INDIVIDUAL COMPONENT TOGGLE**

Display #	Relay/Output
0	Exit
2	Relay 2
3	Relay 3
4	Relay 4
5	Relay 5
6	Relay 6
7	Relay 7
8	DC Output 1
9	DC Output 2
10	DC Output 3
11	DC Output 4
12	DC Output 5

SEE RELAY/OUTPUT CHART

20. **MODEL NUMBER INDICATOR**
Displays the two-digit model number of the specific unit. See model list table.

21. **LIGHT ALL LED SEGMENTS**
This will illuminate all the LEDs on the display to ensure they work properly.

22. **VIEW DEFROST CYCLES**
Displays the number of defrosts that have occurred in the past 24 hours.

23. **VIEW COMPRESSOR RUNTIME**
This will show the number of minutes the compressor has run in the prior cycle (or current cycle if the compressor was running when service mode was entered).

24. **ACTIVATE DEFROST/HARVEST**
Turns on the hot gas bypass valve allowing hot gas to circulate through the evaporator causing frost to melt.

25. **RESTORE FACTORY DEFAULTS**
Will restore all adjustable functions to their factory settings.

26. **SOFTWARE VERSION — MAIN BOARD**
Displays software version of the main control board.

27. **SOFTWARE VERSION — USER INTERFACE**
Displays software version of the user interface.

28. **LOG IN PERIOD**
Factory use only - do not adjust.

29. **FACTORY TEST MODE**
Should be 0.

0. **EXIT SERVICE MODE**

MODEL LIST

1000	MODEL INDICATOR		2000 (120V)	MODEL INDICATOR		2000 (230V)	MODEL INDICATOR
1215R	07		2218R	05		2245R	55
1215WC	12		2218RGL	04		2245DC	54
1224BEV	13		2218WC	06		2245WC	56
1224DWR	08		2224BEV	00		2260DC	50
1224R	14		2224R	02		2260R	52
1224RF	09		2224RGL	01		2260RDC	51
1224RSOD	10		2224WC	03		2260WC	53
1224WC	15		2224ZWC	59		2260ZWC	58
CLR1215	18		ADA24R	17			
CO1224F	19						
1224FZR	11						

PROGRAMMING THE UNIT TO CORRECT MODEL NUMBER

1. Disconnect the unit from power source.
2. Push and hold the U-Line button.
3. While still holding the U-Line button, plug the unit into the appropriate power source.
4. When the flashing digits appear (3-5 seconds), use the up and down arrow buttons to select the appropriate model number*. or

*(See Above "Model List")

5. Press the light bulb button once.
6. The display will blink, and then will appear as the programmed display.

Relay / Output Chart

Program	Model	Relay 1	Relay 2	Relay 3	Relay 4	Relay 5	Relay 6	DC1	DC2	DC3	DC4	DC5
53	Nugget Ice, 1 Class	Comp/Fan	-	Dump Valve	Reservoir Fill	Auger	Water Main	Light 1	Light 2	-	-	Cond Fan
57	Nugget Ice, 3 Class	Water Main	Water Dispense	Dump Valve	Reservoir Fill	Auger	Cond Fan	Light 1	Light 2	-	-	Cond Fan
11	Clear Ice, 3 Class	Compressor	Water Dispense	Circ Pump	Water Inlet	Hot Gas Valve	Cond Fan	Light 1	Light 2	-	-	Cond Fan
01	**BV315-***1A	Compressor	-	-	-	-	-	Light 1	Light 2	Evap Fan	-	Cond Fan
03	**BV318-***1A	Compressor	-	-	-	-	-	Light 1	Light 2	Evap Fan	-	Cond Fan
04	**BV324-***1A	Compressor	-	-	-	-	-	Light 1	Light 2	Evap Fan	-	Cond Fan
06	**BV336-***1A	Compressor	Top/Left Valve	Bot/Right Valve	-	-	-	Light 1	Light 2	Evap Fan	Evap Fan 2	Cond Fan
07	**BV515-***1A	Compressor	-	-	-	-	-	Light 1	Light 2	Evap Fan	-	Cond Fan
09	**BV524-***1A	Compressor	-	-	-	-	-	Light 1	Light 2	Evap Fan	-	Cond Fan
13	**DR324-***1A	Compressor	Mullion Heater	-	-	-	-	Light 1	Light 2	Evap Fan	Evap Fan 2	Cond Fan
15	**FZ124-***1A	Compressor	-	-	-	Heater	Cond Fan	Light 1	Light 2	Evap Fan	-	Cond Fan
17	**RE315-***1A	Compressor	-	-	-	-	-	Light 1	Light 2	Evap Fan	-	Cond Fan
19	**RE318-***1A	Compressor	-	-	-	-	-	Light 1	Light 2	Evap Fan	-	Cond Fan
20	**RE324-***1A	Compressor	-	-	-	-	-	Light 1	Light 2	Evap Fan	-	Cond Fan
22	**RE336-***1A	Compressor	Top/Left Valve	Bot/Right Valve	-	-	-	Light 1	Light 2	Evap Fan	Evap Fan 2	Cond Fan
23	**RE515-***1A	Compressor	-	-	-	-	-	Light 1	Light 2	Evap Fan	-	Cond Fan
25	**RE524-***1A	Compressor	-	-	-	-	-	Light 1	Light 2	Evap Fan	-	Cond Fan
27	**RE324-***1A	Compressor	-	-	-	-	-	Light 1	Light 2	Evap Fan	-	Cond Fan
29	**KR524-***1A	Compressor	-	-	-	-	-	Light 1	Light 2	Evap Fan	-	Cond Fan
32	**WC315-***1A	Compressor	-	-	-	-	-	Light 1	Light 2	Evap Fan	-	Cond Fan
33	**WC318-***1A	Compressor	-	-	-	-	-	Light 1	Light 2	Evap Fan	-	Cond Fan
35	**WC324-***1A	Compressor	-	-	-	-	-	Light 1	Light 2	Evap Fan	-	Cond Fan
37	**WC515-***1A	Compressor	-	-	-	-	-	Light 1	Light 2	Evap Fan	-	Cond Fan
38	**WC524-***1A	Compressor	-	-	-	-	-	Light 1	Light 2	Evap Fan	-	Cond Fan
40	**WC336-***1A	Compressor	Top/Left Valve	Bot/Right Valve	-	-	-	Light 1	Light 2	Evap Fan	Evap Fan 2	Cond Fan
41	**BD324-***1A	Compressor	Top/Left Valve	Bot/Right Valve	-	-	-	Light 1	Light 2	Evap Fan	Evap Fan 2	Cond Fan
43	**BD524-***1A	Compressor	Top/Left Valve	Bot/Right Valve	-	-	-	Light 1	Light 2	Evap Fan	Evap Fan 2	Cond Fan
46	**WD324-***1A	Compressor	Top/Left Valve	Bot/Right Valve	-	-	-	Light 1	Light 2	Evap Fan	Evap Fan 2	Cond Fan
48	**WD524-***1A	Compressor	Top/Left Valve	Bot/Right Valve	-	-	-	Light 1	Light 2	Evap Fan	Evap Fan 2	Cond Fan
50	**RF124-***1A	Compressor	-	-	Pan	Defrost Heater	Cond Fan	Light 1	Light 2	Evap Fan	-	Cond Fan
52	**RI124-***1A	Compressor	Icemaker 2	Icemaker 1	Pan	Defrost Heater	Cond Fan	Light 1	Light 2	Evap Fan	-	Cond Fan

Thermistors

Thermistors are used for various temperature readings. Thermistors provide reliable temperature readings using a resistance which varies based on surrounding temperatures. If a faulty thermistor is suspected it may be tested using an accurate ohmmeter.

Both thermistors in the unit are identical. If a thermistor is suspected of being defective, the resistance can be verified. Place the thermistor in an ice water bath, the resistance should read 16.1k Ohms +/-5% on your meter.

Thermistor connections must be kept clean. A thermistor connection that has become corroded can cause resistance values from the thermistor to change as they pass through a dirty connection to the board.

It is for that reason that we apply dielectric grease to all of our thermistor connections. Dielectric grease will help to keep thermistor connections clean and dry.

If you change a thermistor in the unit please re-apply dielectric grease to the connection. If you encounter a dirty thermistor connection, you should replace the thermistor and the thermistor harness.

Thermistor error information can be found in the Control Operations - Service section.

This unit has **two** thermistors.

Thermistor one (Zone):

Located along the right hand side wall. It is used to maintain the operating temperature within that zone.

Thermistor two (Evaporator):

Located on the evaporator. It is used for defrost.

THERMISTOR FAILURE

Zone Thermistor

If the zone thermistor in the unit fails, the unit will continue to cool in a backup mode (Self Preservation Mode) to preserve the integrity of the contents. The unit will otherwise operate normally.

Evaporator Thermistor

If the evaporator thermistor fails, the unit will rely on a preset defrost timer during defrost cycles. The unit will otherwise operate normally. Refer to defrost section.

Thermistor Resistance Data

Temp (F)	Temp (C)	Nominal Resistance (OHMS)*
-40	-40	169157
-31	-35	121795
-22	-30	88766
-13	-25	65333
-4	-20	48614
5	-15	36503
14	-10	27681
23	-5	21166
32	0	16330
41	5	12696
50	10	9951
59	15	7855
68	20	6246
77	25	5000
86	30	4029
95	35	3266
104	40	2665
113	45	2186
122	50	1803
131	55	1495
140	60	1247
149	65	1044
158	70	879
167	75	743
176	80	631

* (+/- 5%)

Defrost

This unit defrosts, by default, every 12 hours of compressor runtime for 45 minutes. If you have verified that the unit does not have an ambient air leak, refer to the **Control Operation - Service** section and adjust unit to defrost every 9 hours for 60 minutes. Also, adjust the #2 thermistor to -4 instead of 0.

Remove Fan and Cover

FREEZER

CONVECTION COOLING

This unit is equipped with an advanced convection cooling system. Convection cooling stabilizes cabinet temperature, cools product faster, and increases energy efficiency.

Evaporator Fan

The evaporator fan is responsible for circulating warm air from the refrigeration zone, past the evaporator and back into the refrigerated zone.

The evaporator fan is factory set to have a 1 minute delay at the beginning of a cooling cycle. This delay gives the evaporator time to cool properly before warm air is passed over it. The fan will continue to run for an additional 2 minutes at the end of a cooling cycle. Fan delay times can be modified through the service menu.

Evaporator fan operation is also determined by door switch state. If the door switch circuit opens, the fan will stop. When the door switch circuit is closed the fan will either continue running with the cooling cycle, or if not currently cooling, the fan will run for 1 minute to circulate air.

Note: If the unit is set to sabbath mode, the evaporator fan will no longer respond to the state of the door switch.

In order to operate efficiently, the evaporator fan blade and vents should be unobstructed and free of any dust buildup.

Evaporator Fan Replacement

Should the evaporator fan need to be replaced follow the steps below.

1. Remove any product from the unit.

2. Turn off the unit.

3. Remove 2 evaporator cover screws in the ceiling of the unit. (See Figure 1)

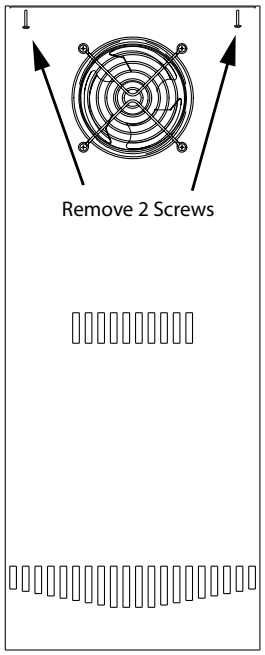

Figure 1: Remove 2 Screws

4. Grasp evaporator cover and pull forward far enough to see behind the fan and unplug the fan. Then remove entire evaporator cover assembly.

5. The fan and fan guard are held to the evaporator cover with four screws. Remove the four screws held in place by four lock washers and four nuts. (See Figure 2)

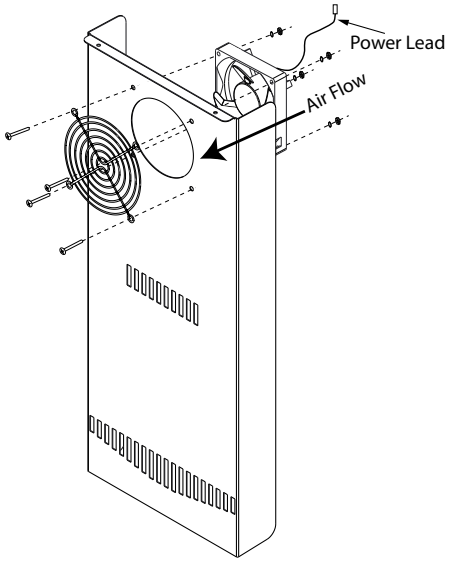

Figure 2: Remove Fan Assembly from Evaporator Cover

NOTICE

Fan must be oriented to pull air in through lower evaporator cover vents and push air out at fan mounting location.

6. Installation is the reverse of removal.

U-Line Corporation (U-Line) Limited Warranty

One Year Limited Warranty

For one year from the date of original purchase, this warranty covers all parts and labor to repair or replace any part of the product that proves to be defective in materials or workmanship. For products installed and used for normal residential use, material cosmetic defects are included in this warranty, with coverage limited to 60 days from the date of original purchase. All service provided by U-Line under the above warranty must be performed by a U-Line factory authorized servicer, unless otherwise specified by U-Line. Service provided during normal business hours.

Two Year Limited Warranty (5 Class Product)

For two years from the date of original purchase, this warranty covers all parts and labor to repair or replace any part of the product that proves to be defective in materials or workmanship. For products installed and used for normal residential use, material cosmetic defects are included in this warranty, with coverage limited to 60 days from the date of original purchase. All service provided by U-Line under the above warranty must be performed by a U-Line factory authorized servicer, unless otherwise specified by U-Line. Service provided during normal business hours.

Available Second & Third Year Limited Warranty

In addition to the standard one and two year warranties outlined above, U-Line offers a one year extension of the warranties from the date of purchase, free of charge. To take advantage of this extension, you must register your product with U-Line within 60 days from the date of purchase at u-line.com and provide proof of purchase.

Five Year Sealed System Limited Warranty

For five years from the date of original purchase, U-Line will repair or replace the following parts, labor not included, that prove to be defective in materials or workmanship: compressor, condenser, evaporator, drier, and all connecting tubing. All service provided by U-Line under the above warranty must be performed by a U-Line factory authorized servicer, unless otherwise specified by U-Line. Service provided during normal business hours.

Terms

These warranties apply only to products installed in any one of the fifty states of the United States, the District of Columbia, or the ten provinces of Canada. The warranties do not cover any parts or labor to correct any defect caused by negligence, accident or improper use, maintenance, installation, service, repair, acts of God, fire, flood or other natural disasters. The product must be installed, operated, and maintained in accordance with your product's User Guide.

The remedies described above for each warranty are the only ones that U-Line will provide, either under these warranties or under any warranty arising by operation of law. U-Line will not be responsible for any consequential or incidental damages arising from the breach of these warranties or any other warranty, whether express, implied, or statutory. Some states do not allow the exclusion or limitation of incidental or consequential damages, so the above limitation or exclusion may not apply to you. These warranties give you specific legal rights, and you may also have other rights which vary from state to state.

Any warranty that may be implied in connection with your purchase or use of the product, including any warranty of *merchantability* or any warranty *fit for a particular purpose* is limited to the duration of these warranties, and only extends to five years in duration for the parts described in the section related to the five year limited warranty above. Some states do not allow limitations on how long an implied warranty lasts, so the above limitations may not apply to you.

- The warranties only apply to the original purchaser and are non-transferable.
- The second, third, and five year warranties cover products installed and used for normal residential or designated marine use only.
- The warranties apply to units operated outside only if designed for outdoor use by model and serial number.
- U-Line Commercial products are covered by the one year and 5 year limited warranties and are not eligible for the second and third year limited warranties.
- Replacement water filters, light bulbs, and other consumable parts are not covered by these warranties.
- The start of U-Line's obligation is limited to four years after the shipment date from U-Line.
- In-home instruction on how to use your product is not covered by these warranties.
- Food, beverage, and medicine loss are not covered by these warranties.
- If the product is located in an area where U-Line factory authorized service is not available, you may be responsible for a trip charge or you may be required to bring the product to a U-Line factory authorized service location at your own cost and expense.
- Units purchased after use as floor displays, and/or certified reconditioned units, are covered by the limited one year warranty only and no coverage is provided for cosmetic defects.
- Signal issues related to Wi-Fi connectivity are not covered by these warranties.

For parts and service assistance, or to find U-Line factory authorized service near you, contact U-Line:
8900 N. 55th Street, Milwaukee, WI 53223 • u-line.com • onlineservice@u-line.com • +1.414.354.0300

Copyright U-Line Corporation. All Rights Reserved. | Publication Number 30379 | 3/2024 Rev. Q